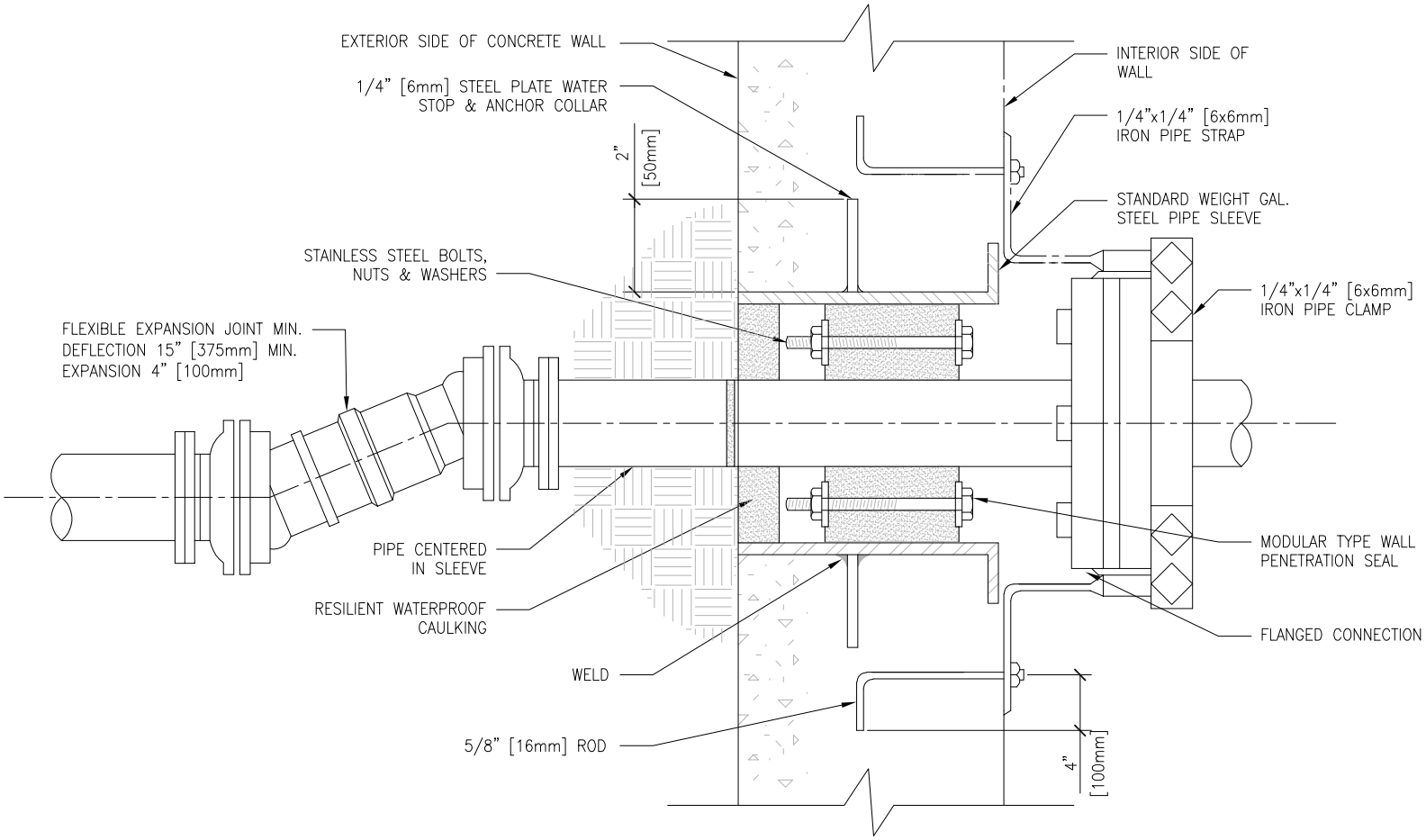

PIPE PENETRATION THROUGH WALLS BELOW GRADE

#

NTS

U.S. Department of Veterans Affairs

DETAIL TITLE / PIPE PENETRATION THROUGH WALLS BELOW GRADE

SCALE: NONE

DATE ISSUED: SEPTEMBER 1, 2020 CAD DETAIL NO.: SD220511-01.DWG

PLUMBING ABBREVIATIONS

ABS:	ACRYLONITRILE BUTADIENE STYRENE
AC:	ALTERNATING CURRENT
ACR:	AIR CONDITIONING AND REFRIGERATION
A/E:	ARCHITECT/ENGINEER
AFF:	ABOVE FINISH FLOOR
AFG:	ABOVE FINISH GRADE
AG:	AIR GAP
AI:	ANALOG INPUT
AISI:	AMERICAN IRON AND STEEL INSTITUTE
AO:	ANALOG OUTPUT
ASHRAE:	AMERICAN SOCIETY OF HEATING REFRIGERATION, AIR CONDITIONING ENGINEERS
ASJ:	ALL SERVICE JACKET
ASME:	AMERICAN SOCIETY OF MECHANICAL ENGINEERS
ASPE:	AMERICAN SOCIETY OF PLUMBING ENGINEERS
ASR:	AUTOMATIC SPRINKLER RISER
AWG:	AMERICAN WIRE GAUGE
BACNET:	BUILDING AUTOMATION AND CONTROL NETWORK
BAG:	SILVER-COPPER-ZINC BRAZING ALLOY
BAS:	BUILDING AUTOMATION SYSTEM
BCUP:	SILVER-COPPER-PHOSPHORUS BRAZING ALLOY
BFP:	REDUCED PRESSURE BACKFLOW PREVENTER
BHP:	BRAKE HORSEPOWER
BTU:	BRITISH THERMAL UNIT
BTU/H:	BRITISH THERMAL UNIT PER HOUR
BSG:	BOROSILICATE GLASS PIPE
C:	CELSIUS
CD:	COMPACT DISK
CDA:	COPPER DEVELOPMENT ASSOCIATION
CGA:	COMPRESSED GAS ASSOCIATION
CFM:	CUBIC FEET PER MINUTE
CO:	CLEANOUT
COR:	CONTRACTING OFFICER'S REPRESENTATIVE
CPVC:	CHLORINATED POLYVINYL CHLORIDE
CR:	CHLOROPRENE
CRS:	CORROSION RESISTANT STEEL
CV:	CONTROL VALVE
CXA:	COMMISSIONING AGENT
DB:	DECIBELS
DB(A):	DECIBELS (A WEIGHTED)
DDC:	DIRECT DIGITAL CONTROL
DFU:	DRAINAGE FIXTURE UNITS
DI:	DIGITAL INPUT
DI:	DEIONIZED WATER
DISS:	DIAMETER INDEX SAFETY SYSTEM
DN:	DIAMETER NOMINAL
DO:	DIGITAL OUTPUT
DOE:	DEPARTMENT OF ENERGY
DVD:	DIGITAL VIDEO DISC
DW:	DISHWASHER
DWG:	DRAWING
DWV:	DRAINAGE, WASTE AND VENT
ECC:	ENGINEERING CONTROL CENTER AKA BAS
EL:	ELEVATION
EPA:	ENVIRONMENTAL PROTECTION AGENCY
EPACT:	ENERGY POLICY ACT
EPDM:	ETHYLENE PROPYLENE DIENE MONOMER
EPT:	ETHYLENE PROPYLENE TERPOLYMER
ETO:	ETHYLENE OXIDE
EX:	EXISTING
F:	FAHRENHEIT
FAR:	FEDERAL ACQUISITION REGULATIONS
FCO:	FLOOR CLEANOUT
FD:	FLOOR DRAIN
FDC:	FIRE DEPARTMENT (HOSE) CONNECTION
FNPT:	FEMALE NATIONAL PIPE THREAD
FOP:	FUEL OIL PUMP
FOR:	FUEL OIL RETURN
FOS:	FUEL OIL SUPPLY
FOV:	FUEL OIL VENT
FPM:	FLUOROELASTOMER POLYMER
FS:	FLOW SWITCH
FSK:	FOIL-SCRIM-KRAFT FACING
FSS:	VA CONSTRUCTION & FACILITIES MANAGEMENT, FACILITY STANDARDS SERVICE
FU:	FIXTURE UNITS

PLUMBING ABBREVIATIONS

GAL:	GALLON
GCO:	GRADE CLEANOUTS
GPD:	GALLONS PER DAY
GPH:	GALLONS PER HOUR
GPM:	GALLONS PER MINUTE
GPR:	GAS PRESSURE REGULATOR
GRS:	GAS REGULATOR STATION
GT:	GREASE TRAP
GVTR:	GAS VENT THROUGH ROOF
H&CW:	HOT AND COLD WATER
HB:	HOSE BIBB
HD:	HUB DRAIN
HDPE:	HIGH DENSITY POLYETHYLENE
HEFP:	HEALTHCARE ENVIRONMENT AND FACILITIES PROGRAM (REPLACEMENT FOR OCAMES)
HEX:	HEAT EXCHANGER
HG:	MERCURY
HOA:	HANDS-OFF-AUTOMATIC
HP:	HORSEPOWER
HVE:	HIGH VOLUME EVACUATION
HWCP:	HOT WATER CIRCULATING PUMP
HYD:	HYDRANT
HZ:	HERTZ
ID:	INSIDE DIAMETER
IE:	INVERT ELEVATION
INV:	INVERT
IPC:	INTERNATIONAL PLUMBING CODE
IPS:	IRON PIPE SIZE
KG:	KILOGRAM
KPA:	KILOPASCAL
KW:	KILOWATT
KWH:	KILOWATT HOUR
LAV:	LAVATORY
LB:	POUND
LBS/HR:	POUNDS PER HOUR
LNG:	LIQUID NATURAL GAS
L/MIN:	LITERS PER MINUTE
L/S:	LITERS PER SECOND
M:	METER
MA:	MEDICAL AIR
MAV:	MEDICAL AIR VENT
MAX:	MAXIMUM
MBH:	1000 BTU PER HOUR
MER:	MECHANICAL EQUIPMENT ROOM
MFG:	MANUFACTURER
MG:	MILLIGRAM
MG/L:	MILLIGRAMS PER LITER
ML:	MILLILITER
MM:	MILLIMETER
MIN:	MINIMUM
MV:	MEDICAL VACUUM
N2:	NITROGEN
N20:	NITROGEN OXIDE
NC:	NORMALLY CLOSED
NF:	OIL FREE DRY (NITROGEN)
NG:	NATURAL GAS
NIC:	NOT IN CONTRACT
NO:	NORMALLY OPEN
NOM:	NOMINAL
NPTF:	NATIONAL PIPE THREAD FEMALE
NPS:	NOMINAL PIPE SIZE
NPT:	NOMINAL PIPE THREAD
NTS:	NOT TO SCALE
O2:	OXYGEN
OC:	ON CENTER
OCAMES:	REPLACED BY HEFP
OD:	OUTSIDE DIAMETER
OR:	OPERATING ROOM
OSD:	OPEN SIGHT DRAIN
OS&Y:	OUTSIDE STEM AND YOKE
OXY:	OXYGEN
PA:	PASCAL
PBPU:	PREFABRICATED BEDSIDE PATIENT UNITS
PD:	PRESSURE DROP OR DIFFERENCE
PDI:	PLUMBING AND DRAINAGE INSTITUTE
PG:	PRESSURE GAUGE
PH:	POWER OF HYDROGEN
PID:	PROPORTIONAL-INTEGRAL-DIFFERENTIAL
PLC:	PROGRAMMABLE LOGIC CONTROLLERS
PP:	POLYPROPYLENE
PPB:	PARTS PER BILLION
PPM:	PARTS PER MILLION
PRV:	PRESSURE REDUCING VALVE
PSI:	POUNDS PER SQUARE INCH
PSIA:	POUNDS PER SQUARE INCH ATMOSPHERE
PSIG:	POUNDS PER SQUARE INCH GAUGE
PTFE:	POLYTETRAFLUOROETHYLENE
PVC:	POLYVINYL CHLORIDE
PVDF:	POLYVINYLIDENE FLUORIDE
PW:	POTABLE WATER
RAD:	RADIANS
RD:	ROOF DRAIN
RO:	REVERSE OSMOSIS
RPM:	REVOLUTIONS PER MINUTE
RTD:	RESISTANCE TEMPERATURE DETECTORS
RTRP:	REINFORCED THERMOSETTING RESIN PIPE

PLUMBING ABBREVIATIONS

SAN:	SANITARY SEWER
SCFM:	STANDARD CUBIC FEET PER MINUTE
SDI:	SILT DENSITY INDEX
SDMH:	STORM DRAIN MANHOLE
SF:	SQUARE FEET
SMACNA:	SHEET METAL AND AIR CONDITIONING CONTRACTORS NATIONAL ASSOCIATION
SPEC:	SPECIFICATION
SPS:	STERILE PROCESSING SERVICES
SQFT:	SQUARE FEET
SS:	STAINLESS STEEL
STD:	STANDARD
SUS:	SAYBOLT UNIVERSAL SECOND
SW:	STORM WATER
SWP:	STEAM WORKING PRESSURE
TCV:	TEMPERATURE CONTROL VALVE
TD:	TRENCH DRAIN
TDH:	TOTAL DYNAMIC HEAD
TEFC:	TOTALLY ENCLOSED FAN-COOLED
TEMP:	TEMPERATURE
TFE:	TETRAFLUOROETHYLENE
THERM:	100,000 BTU
THHN:	THERMOPLASTIC HIGH-HEAT RESISTANT NYLON COATED WIRE
THWN:	THERMOPLASTIC HEAT & WATER RESISTANT NYLON COATED WIRE
TMV:	THERMOSTATIC MIXING VALVE
T/P:	TEMPERATURE AND PRESSURE
TP:	TRAP PRIMER
TSTAT:	THERMOSTAT
TYP:	TYPICAL
USDA:	U.S. DEPARTMENT OF AGRICULTURE
V:	VOLT
VA:	VETERANS ADMINISTRATION
VA CFM:	VA CONSTRUCTION & FACILITIES MANAGEMENT
VA CFM CSS:	VA CFM CONSULTING SUPPORT SERVICE
VAC:	VACUUM
VAC:	VOLTAGE IN ALTERNATING CURRENT
VAMC:	VETERANS ADMINISTRATION MEDICAL CENTER
VA TIL:	WWW.CFM.VA.GOV/TIL/INDEX.ASP
VHA:	VETERANS HEALTH ADMINISTRATION
VSD:	VARIABLE SPEED DRIVE
VTR:	VENT THROUGH ROOF
W:	WASTE
WAGD:	WASTE ANESTHESIA GAS DISPOSAL
WC:	WATER CLOSET
WCO:	WATER CLEANOUT
WG:	WATER GAUGE
WH:	WALL HYDRANT
WOG:	WATER, OIL, GAS
WPD:	WATER PRESSURE DROP
WS:	WASTE STACK
WSFU:	WATER SUPPLY FIXTURE UNITS
YCO:	YARD CLEANOUT
YH:	YARD HYDRANT

DRAWING SYMBOLS

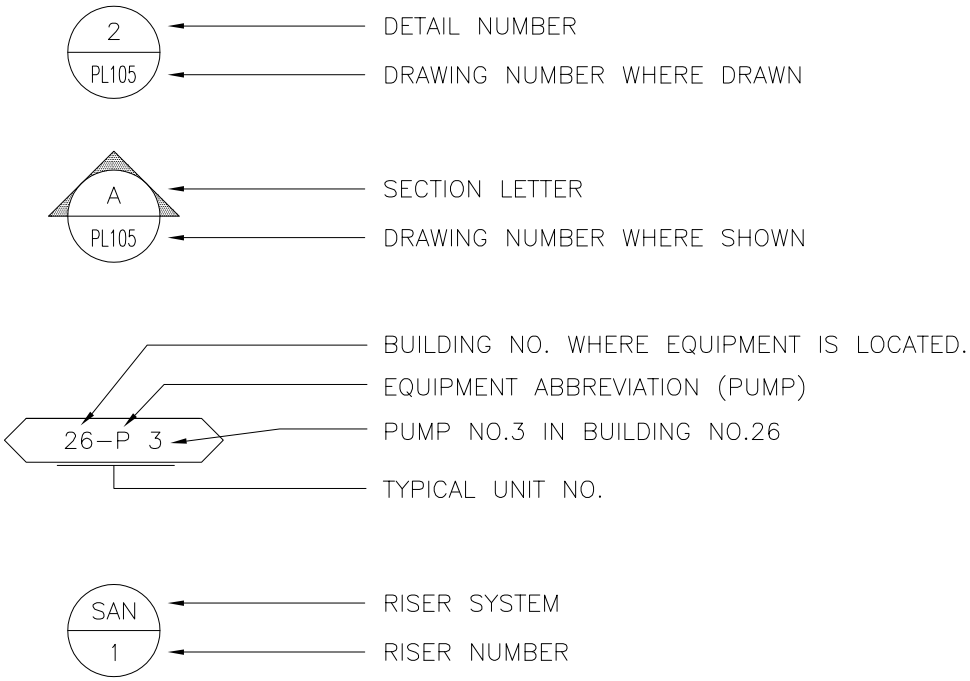

U.S. Department of Veterans Affairs

DETAIL TITLE / DRAWING SYMBOLS

SCALE: NONE

DATE ISSUED: SEPTEMBER 1, 2020 CAD DETAIL NO.: SD220511-05.DWG

PLUMBING PIPING SYMBOLS

—— - —— - —— - ——	DOMESTIC COLD WATER, COLD WATER
— - - — - - — - - —	DOMESTIC HOT WATER, HOT WATER
— - - - — - - - — - - - —	DOMESTIC HOW WATER RETURN, HOT WATER RETURN
--- MA ---- MA ---- MA ---	MEDICAL AIR
—— MV —— MV —— MV ——	MEDICAL VACUUM
--- LA ---- LA ---- LA ---	LABORATORY AIR
—— LV —— LV —— LV ——	LABORATORY VACUUM
—— OA —— OA —— OA ——	ORAL EVACUATION
--- IA ---- IA ---- IA ---	INDUSTRIAL AIR
—— D —— D —— D ——	DRAIN
— — — — — — — — — — —	VENT (SANITARY)
—— SS —— SS —— SS ——	SOIL, WASTE, OR SANITARY SEWER
---SAN----SAN----SAN---	SANITARY SEWER, BELOW GRADE
—— SD —— SD —— SD ——	STORM WATER
--- SD ---- SD ---- SD ---	STORM WATER, BELOW GRADE
——SCW——SCW——SCW——	SOFTEN COLD WATER
——FCW——FCW——FCW——	FILTERED COLD WATER
——DWS——DWS——DWS——	DRINKING WATER SUPPLY
---DWR----DWR----DWR---	DRINKING WATER RETURN
——TWS——TWS——TWS——	TEMPERED WATER SUPPLY
---TWR----TWR----TWR---	TEMPERED WATER RETURN
—— N_2O —— N_2O —— N_2O ——	NITROUS OXIDE
—— 0 —— 0 —— 0 ——	OXYGEN
—— N_2 —— N_2 —— N_2 ——	NITROGEN
—— NG —— NG —— NG ——	NATURAL GAS
--- NG ---- NG ---- NG ---	NATURAL GAS, BELOW GRADE
—— FOD —— FOD —— FOD ——	FUEL OIL DISCHARGE
—— FOS —— FOS —— FOS ——	FUEL OIL SUPPLY
——FOV——FOV——FOV——	FUEL OIL VENT
---FOR----FOR----FOR---	FUEL OIL RETURN

VA | U.S. Department of Veterans Affairs

DETAIL TITLE / PLUMBING PIPING SYMBOLS

SCALE: NONE

DATE ISSUED: SEPTEMBER 1, 2020 CAD DETAIL NO.: SD220511-06.DWG

GENERAL PLUMBING SYMBOLS

	DIRECTION OF PIPE PITCH (DOWN)
	DIRECTION OF FLOW
	ANCHOR
	REDUCER OR INCREASER
	ECCENTRIC REDUCER
	TOP CONNECTION, 45° OR 90°
	BOTTOM CONNECTION, 45° OR 90°
	SIDE CONNECTION
	CAPPED OUTLET
	RISE OR DROP IN PIPE
	UNION
	PIPE UP
	PIPE DOWN
	POINT OF CONNECTION BETWEEN NEW AND EXISTING WORK
	LIMIT OF DEMOLITION
	INVERTED BUCKET TRAP SET INCLUDING PIPING ACCESSORIES
	FLOAT & THERMOSTATIC TRAP SET INCLUDING PIPING ACCESSORIES
	STRAINER
	THERMOMETER
	PRESSURE GAGE
FE	FLOW ELEMENT
CO	CLEAN OUT
	HOSE BIB

U.S. Department of Veterans Affairs

DETAIL TITLE / GENERAL PLUMBING SYMBOLS

SCALE: NONE

DATE ISSUED: SEPTEMBER 1, 2020 CAD DETAIL NO.: SD220511-07.DWG

PLUMBING VALVE SYMBOLS

GATE VALVE

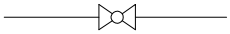
GLOBE VALVE

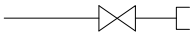
GATE VALVE WITH 3/4 " HOSE ADAPTER

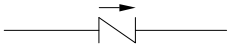
CHECK VALVE

ANGLE GLOBE VALVE

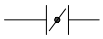
BUTTERFLY VALVE

BALL VALVE

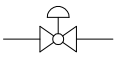
MODULATING CONTROL VALVE

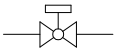
TWO POSITION CONTROL VALVE

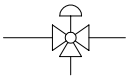
THREE-WAY MODULATING CONTROL VALVE

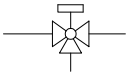
THREE-WAY TWO POSITION CONTROL VALVE

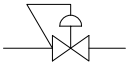
PRESSURE REGULATING VALVE

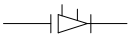
AUTOMATIC FLOW CONTROL VALVE

PRESSURE RELIEF VALVE

MANUAL AIR VENT

TEST PLUG (PRESSURE/TEMPERATURE)

AUTOMATIC AIR VENT

VA | U.S. Department of Veterans Affairs

DETAIL TITLE / PLUMBING VALVE SYMBOLS

SCALE: NONE

DATE ISSUED: SEPTEMBER 1, 2020 CAD DETAIL NO.: SD220511-08.DWG

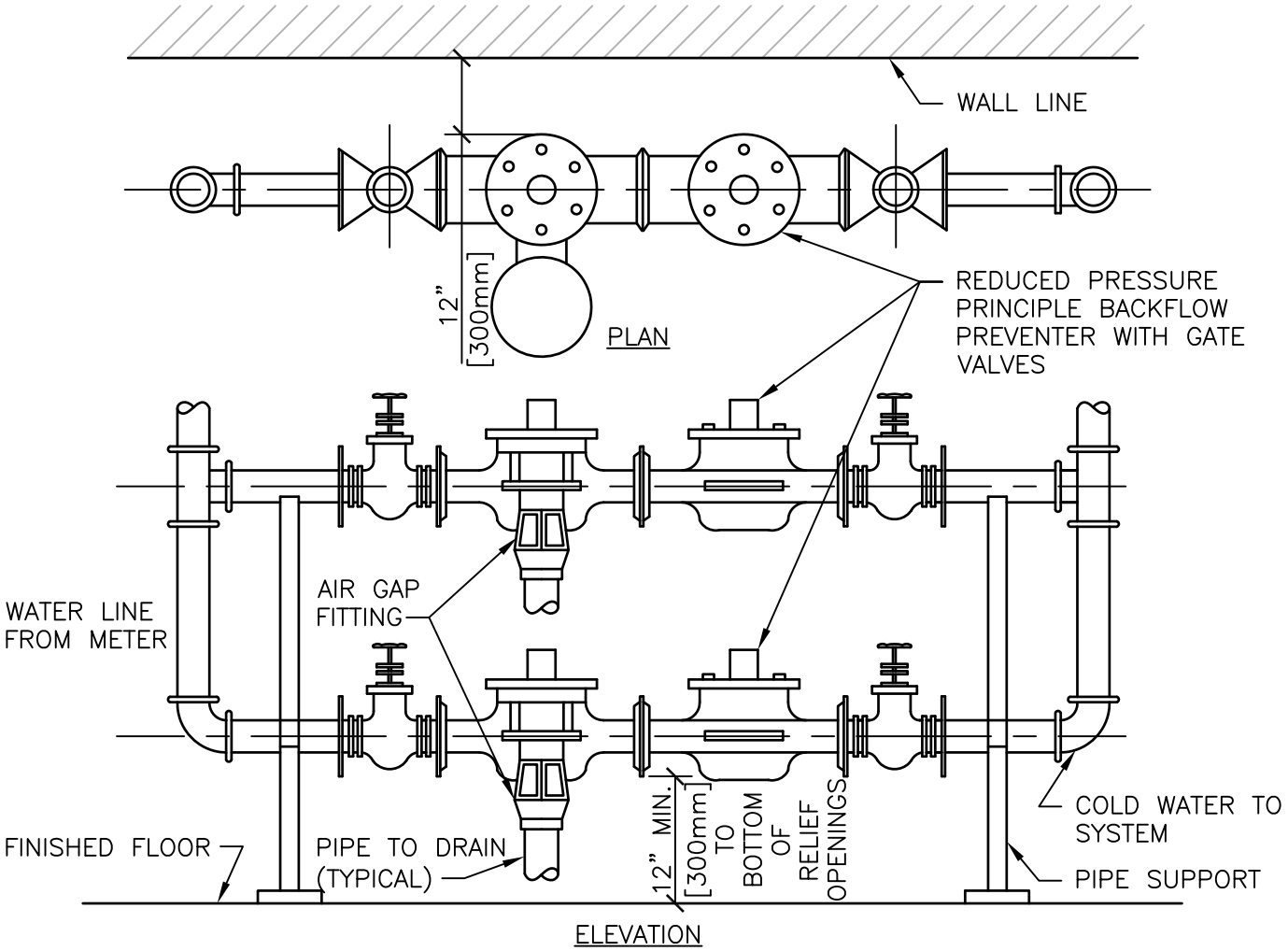

BACKFLOW PREVENTER PIPING DETAIL

#

NTS

Department of Veterans Affairs

DETAIL TITLE / BACKFLOW PREVENTER PIPING DETAIL

SCALE: NONE

DATE ISSUED: DECEMBER 1, 2015 CAD DETAIL NO.: SD221100-01.DWG

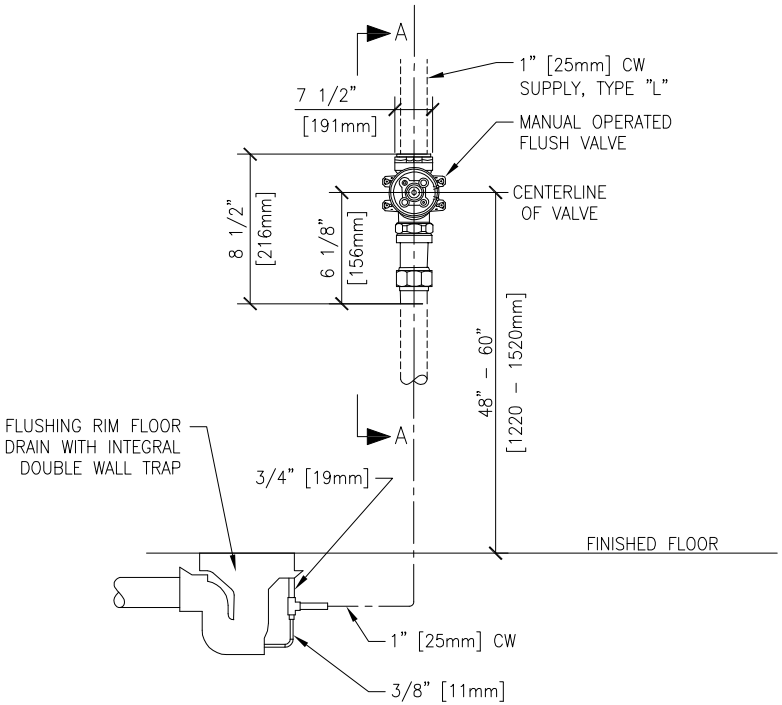

ELEVATION

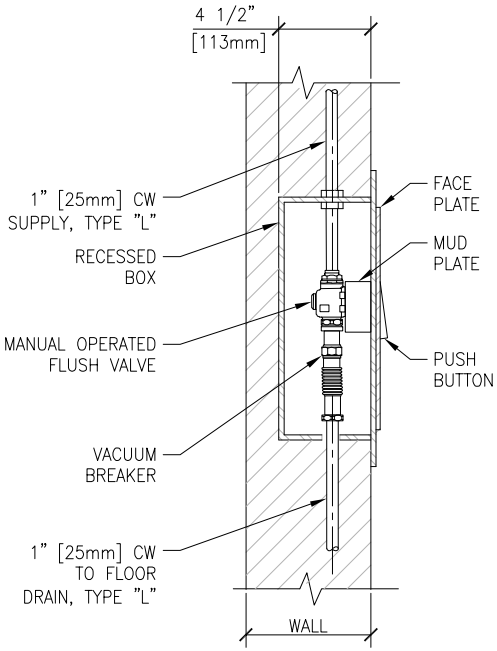

SECTION A

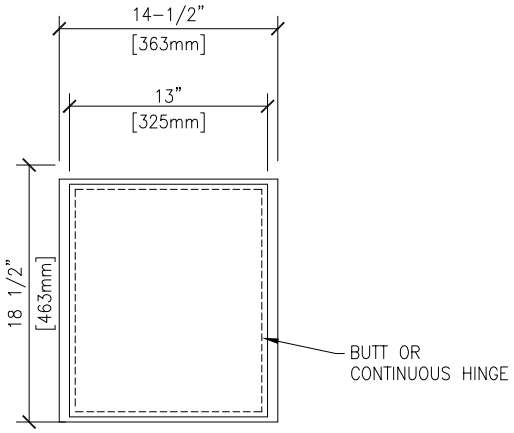

VALVE CABINET

FLUSHING RIM FLOOR DRAIN "L" CYSTOSCOPY ROOM

NTS

VA | U.S. Department of Veterans Affairs

DETAIL TITLE / FLUSHING RIM FLOOR DRAIN "L" CYSTOSCOPY ROOM

SCALE: NONE

DATE ISSUED: SEPTEMBER 1, 2020 CAD DETAIL NO.: SD221300-01.DWG

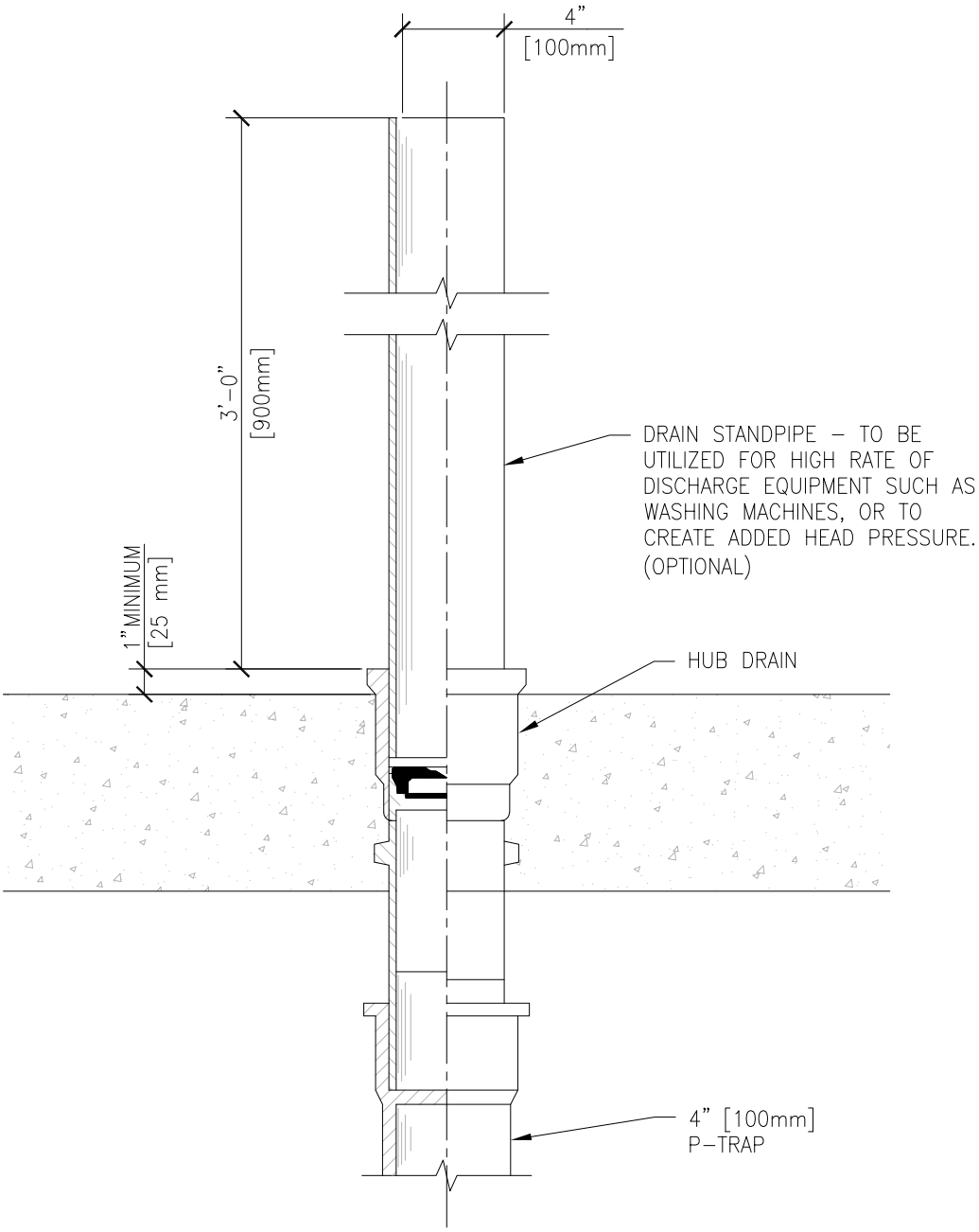

TYPE "W" HUB DRAIN WITH STANDPIPE

#

NTS

VA | U.S. Department of Veterans Affairs

DETAIL TITLE / TYPE 'W' HUB DRAIN WITH STANDPIPE

SCALE: NONE

DATE ISSUED: SEPTEMBER 1, 2020 CAD DETAIL NO.: SD221300-02.DWG

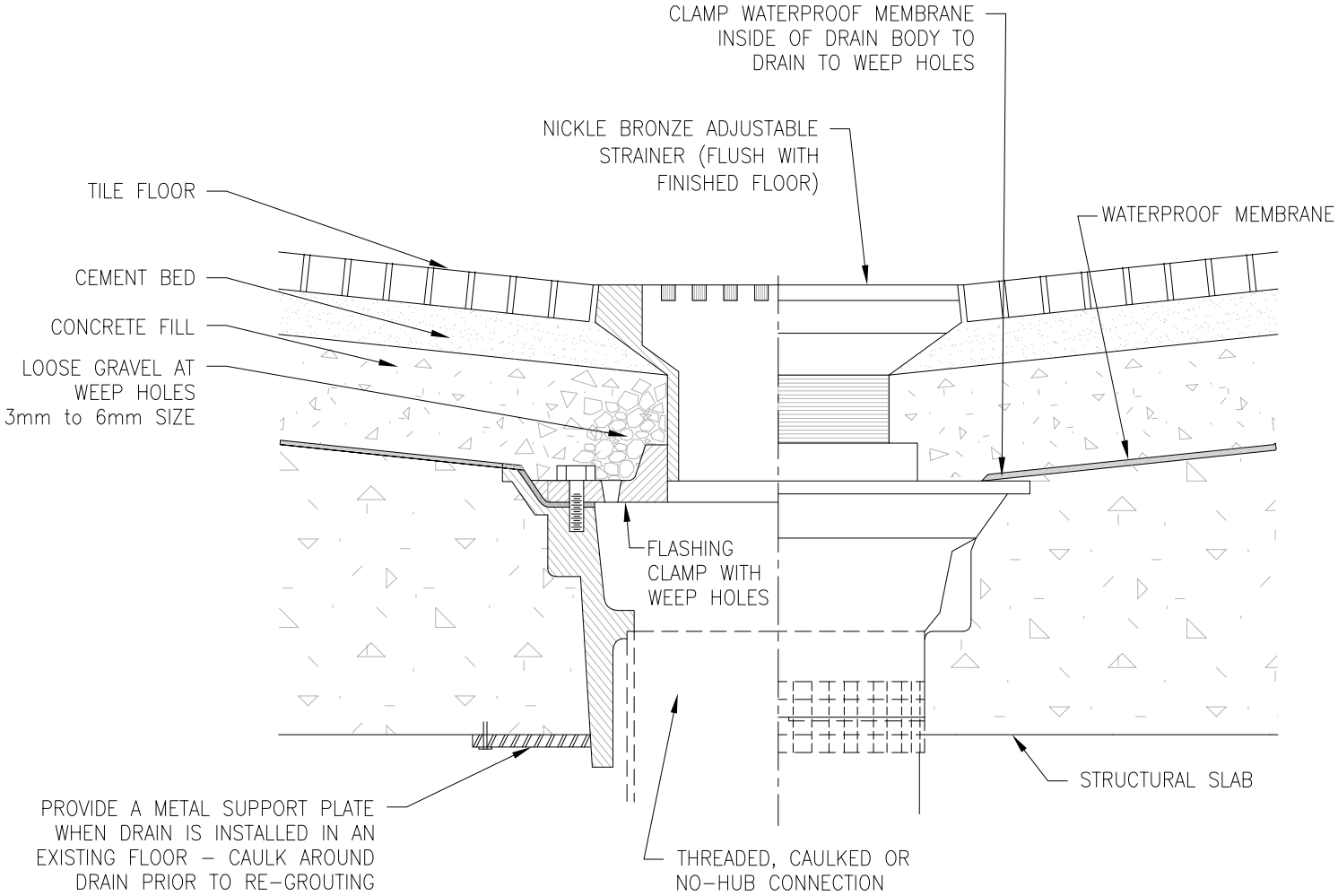

NOTE:
SLOPE MEMBRANE LINER 2% TO DRAIN.

TYPE "C" FLOOR DRAIN DETAIL

NTS

U.S. Department of Veterans Affairs

DETAIL TITLE / TYPE "C" FLOOR DRAIN

SCALE: NONE

DATE ISSUED: SEPTEMBER 1, 2020 CAD DETAIL NO.: SD221300-03.DWG

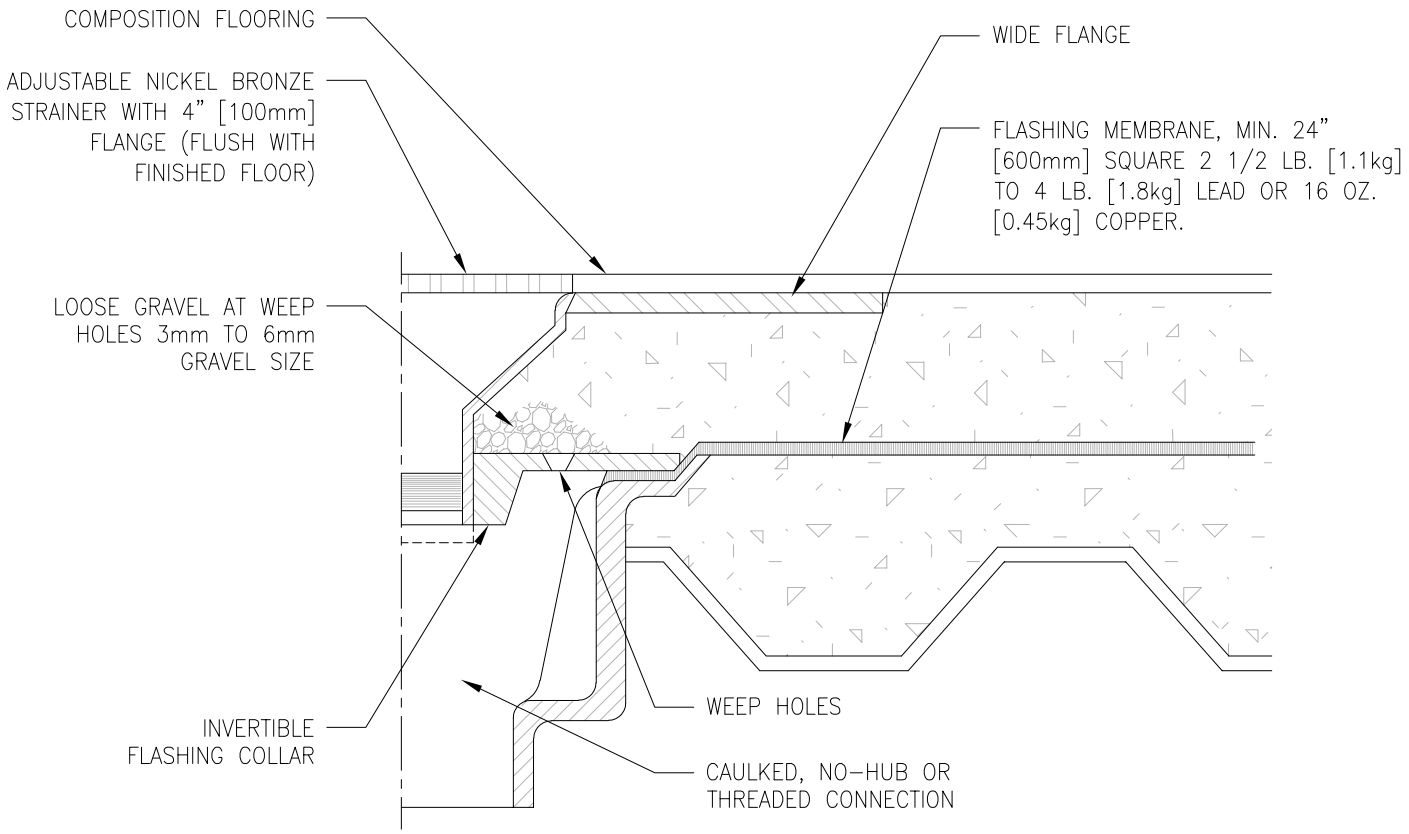

NOTES:

1. SLOPE MEMBRANE LINER 2% TO DRAIN.
2. PROVIDE FLASHING MEMBRANE WHEN DRAIN IS INSTALLED IN A NON-MEMBRANE FLOOR

TYPE "D" FLOOR DRAIN DETAIL

NTS

VA | U.S. Department of Veterans Affairs

DETAIL TITLE / TYPE "D" FLOOR DRAIN

SCALE: NONE

DATE ISSUED: SEPTEMBER 1, 2020 CAD DETAIL NO.: SD221300-04.DWG

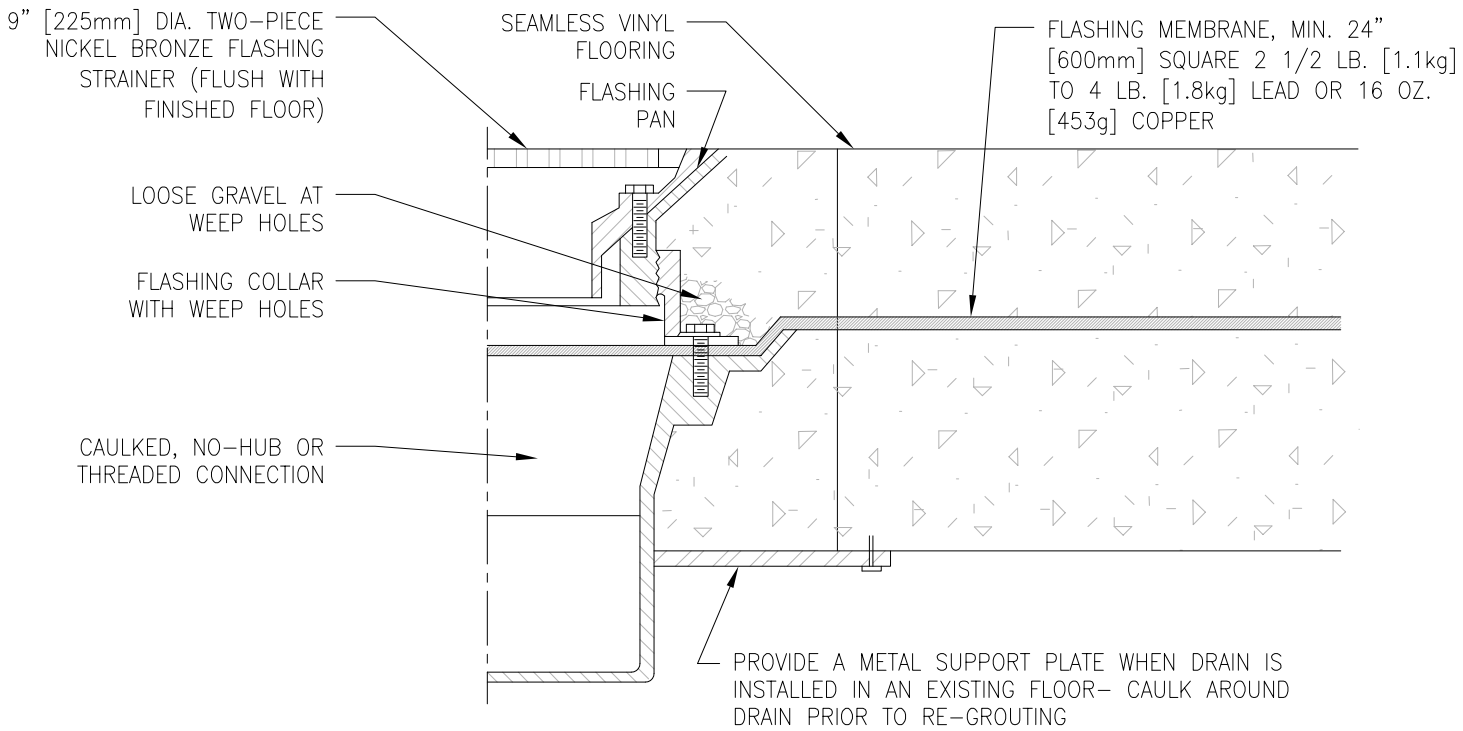

NOTES:

1. SLOPE MEMBRANE LINER 2% TO DRAIN.
2. PROVIDE FLASHING MEMBRANE WHEN DRAIN IS INSTALLED IN A NON-MEMBRANE FLOOR

TYPE "F" FLOOR DRAIN DETAIL

NTS

U.S. Department of Veterans Affairs

DETAIL TITLE / TYPE "F" FLOOR DRAIN

SCALE: NONE

DATE ISSUED: SEPTEMBER 1, 2020 CAD DETAIL NO.: SD221300-05.DWG

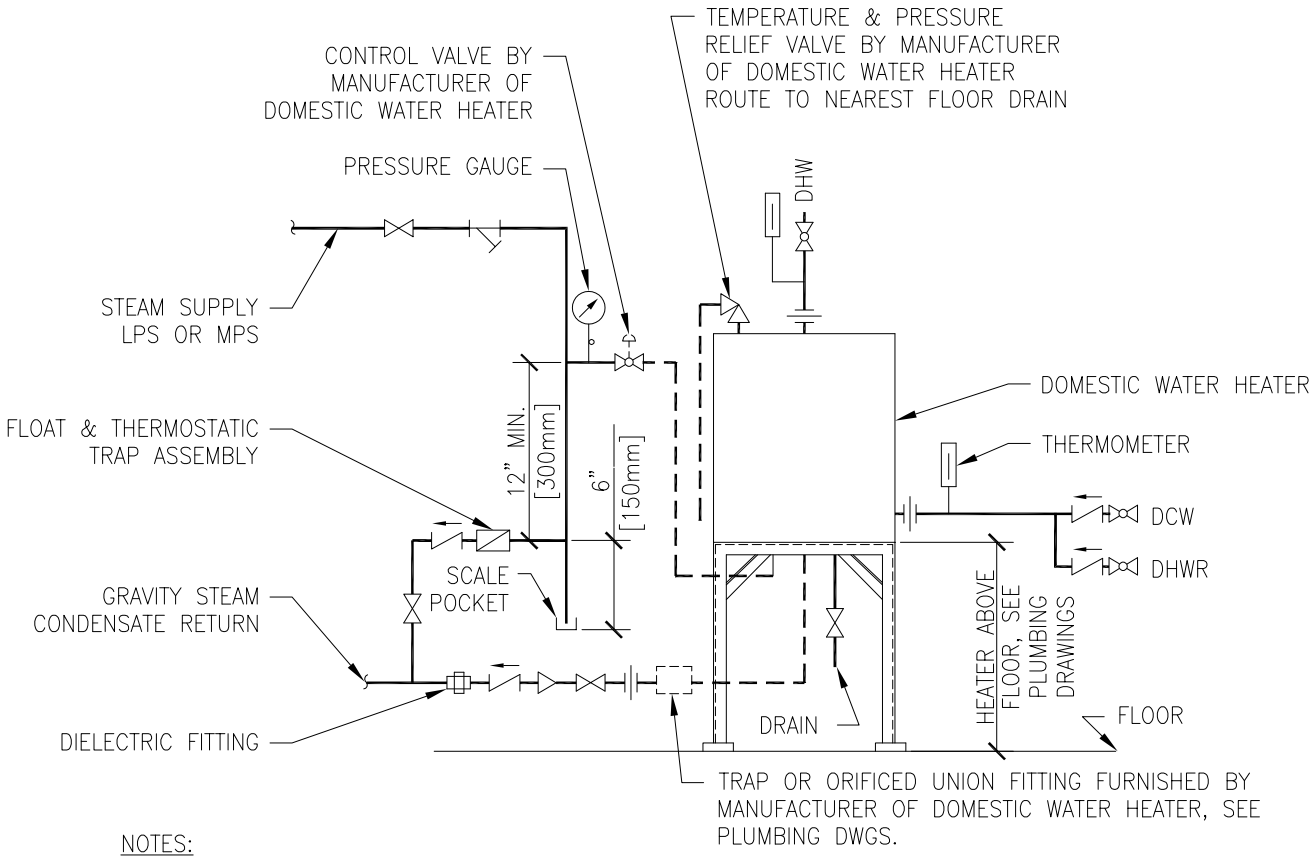

NOTES:

1. VERTICAL COIL TYPE DOMESTIC WATER HEATER IS SHOWN. IF HORIZONTAL TUBE BUNDLE TYPE IS FURNISHED, PIPING SHALL BE SIMILAR.
2. SEE PLUMBING DRAWINGS FOR PIPING CONNECTIONS.
3. PIPING TO UPPER HEATER HEAD SHOULD BE PROVIDED WITH UNION OR FLANGES, LOCATED OUTSIDE THE OUTER DIAMETER OF HEAD TO FACILITATE REMOVAL OF HEAD AND SHELL.
4. PIPING BETWEEN CONTROL VALVE AND HEATER CONNECTION SHOULD BE AS SHORT AS POSSIBLE.
5. PROVIDE INTEGRAL OR EXTERNAL HEAT TRAPS.
6. PROVIDE HOSE CONNECTION TO DRAIN.

DESIGNER'S NOTES:

ENSURE ENOUGH HEIGHT IS PROVIDED SO CONDENSATE CAN RETURN BY GRAVITY. SIZE END OF MAIN TRAP SET ON FLOOR PLANS. IF STEAM PRESSURE IS 5 PSIG [34 kPa] OR LOWER FURNISH CONTROL AIR FOR CONTROLS. WITH 30 PSIG [206 kPa] STEAM CONTROLS ARE PILOT OPERATED.

CONNECTIONS TO DOMESTIC WATER HEATER

NTS

U.S. Department of Veterans Affairs

DETAIL TITLE / CONNECTIONS TO DOMESTIC WATER HEATER

SCALE: NONE

DATE ISSUED: SEPTEMBER 1, 2020 CAD DETAIL NO.: SD223500-01.DWG

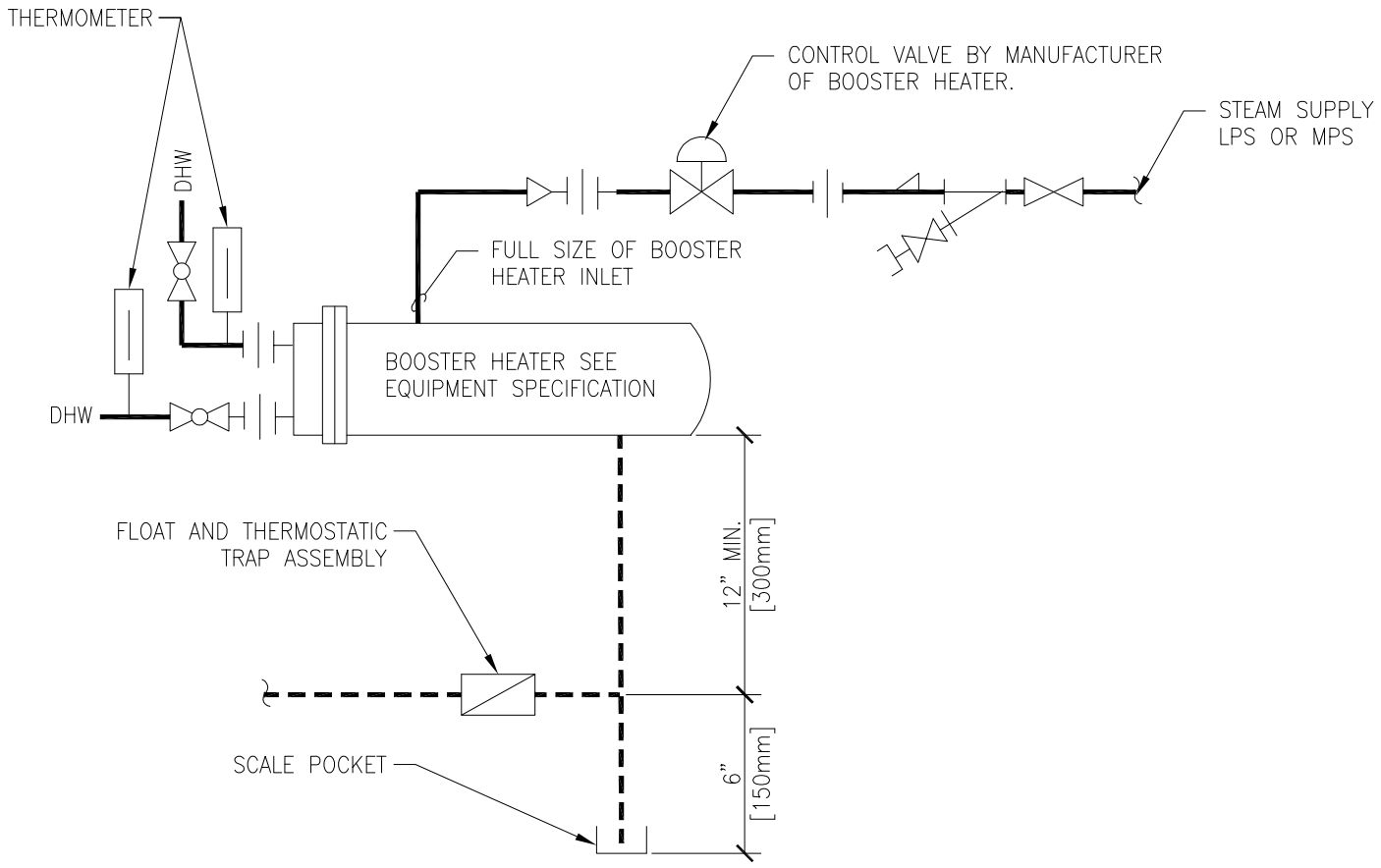

NOTES:

1. ALL STEAM BOOSTER HEATERS REQUIRED BY EQUIPMENT SPECIFICATION SHALL BE PIPED AS SHOWN ABOVE.

2. SEE EQUIPMENT SPECIFICATION AND PLUMBING DRAWINGS FOR PIPING CONNECTIONS.

CONNECTIONS TO DOMESTIC WATER BOOSTER HEATER

NTS

U.S. Department of Veterans Affairs

DETAIL TITLE / CONNECTIONS TO DOMESTIC WATER BOOSTER HEATER

SCALE: NONE

DATE ISSUED: SEPTEMBER 1, 2020 CAD DETAIL NO.: SD223500-02.DWG

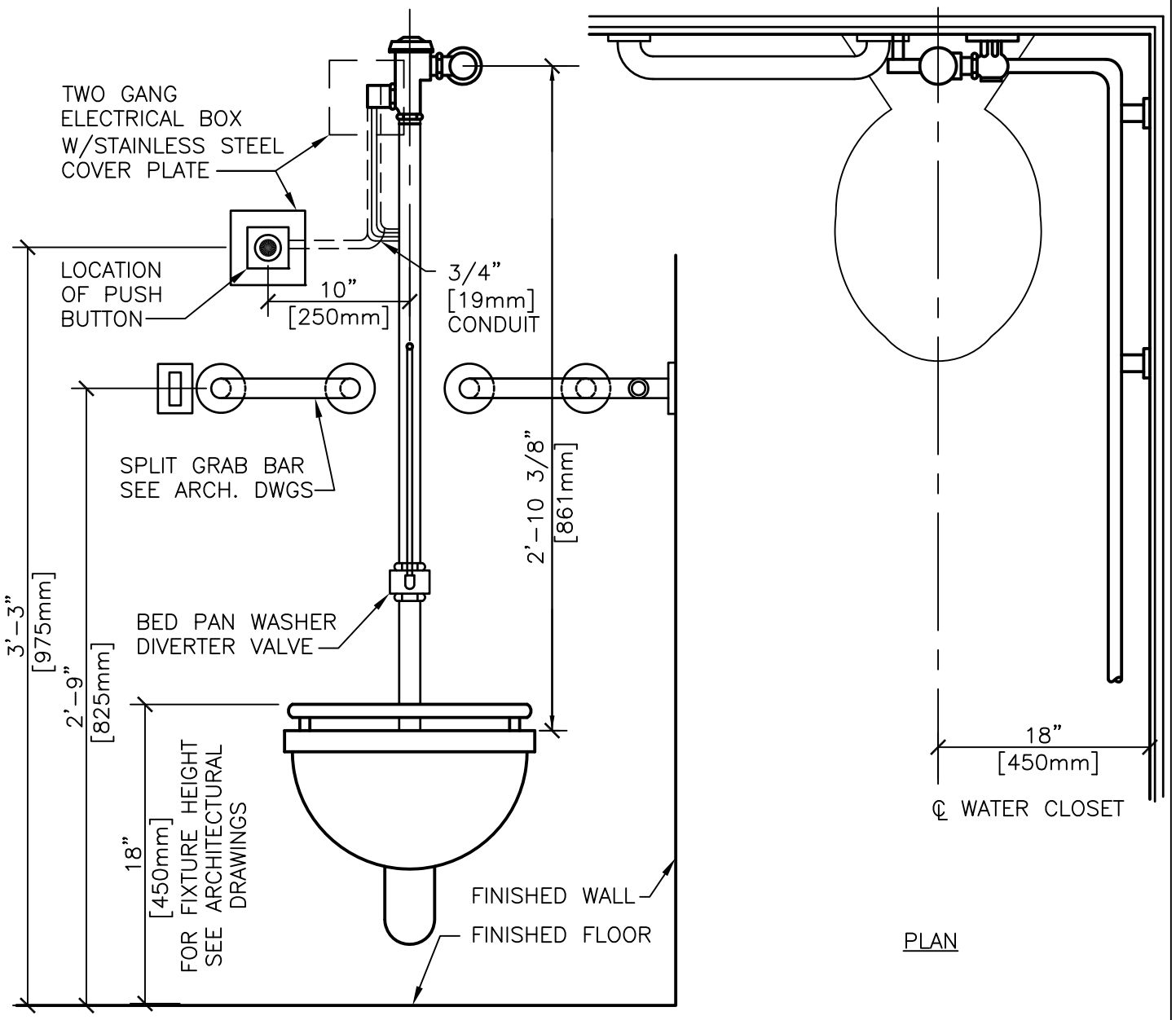

P-103 WATER CLOSET DETAIL

#

NTS

Department of Veterans Affairs

DETAIL TITLE / P-103 WATER CLOSET DETAIL

SCALE: NONE

DATE ISSUED: DECEMBER 1, 2015 CAD DETAIL NO.: SD224000-01.DWG

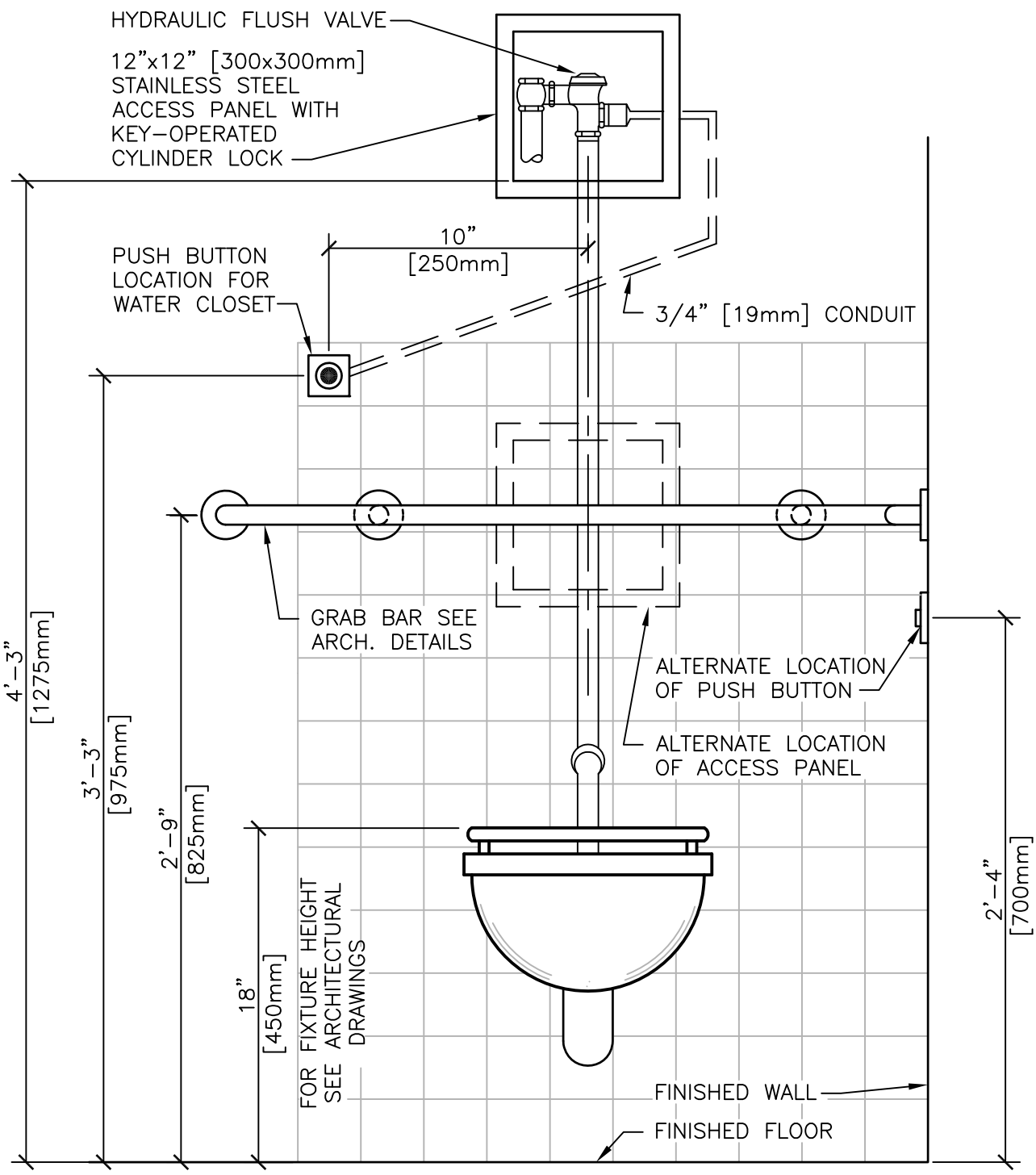

P-111 WATER CLOSET

NTS

Department of Veterans Affairs

DETAIL TITLE / P-111 WATER CLOSET

SCALE: NONE

DATE ISSUED: DECEMBER 1, 2015 CAD DETAIL NO.: SD224000-03.DWG

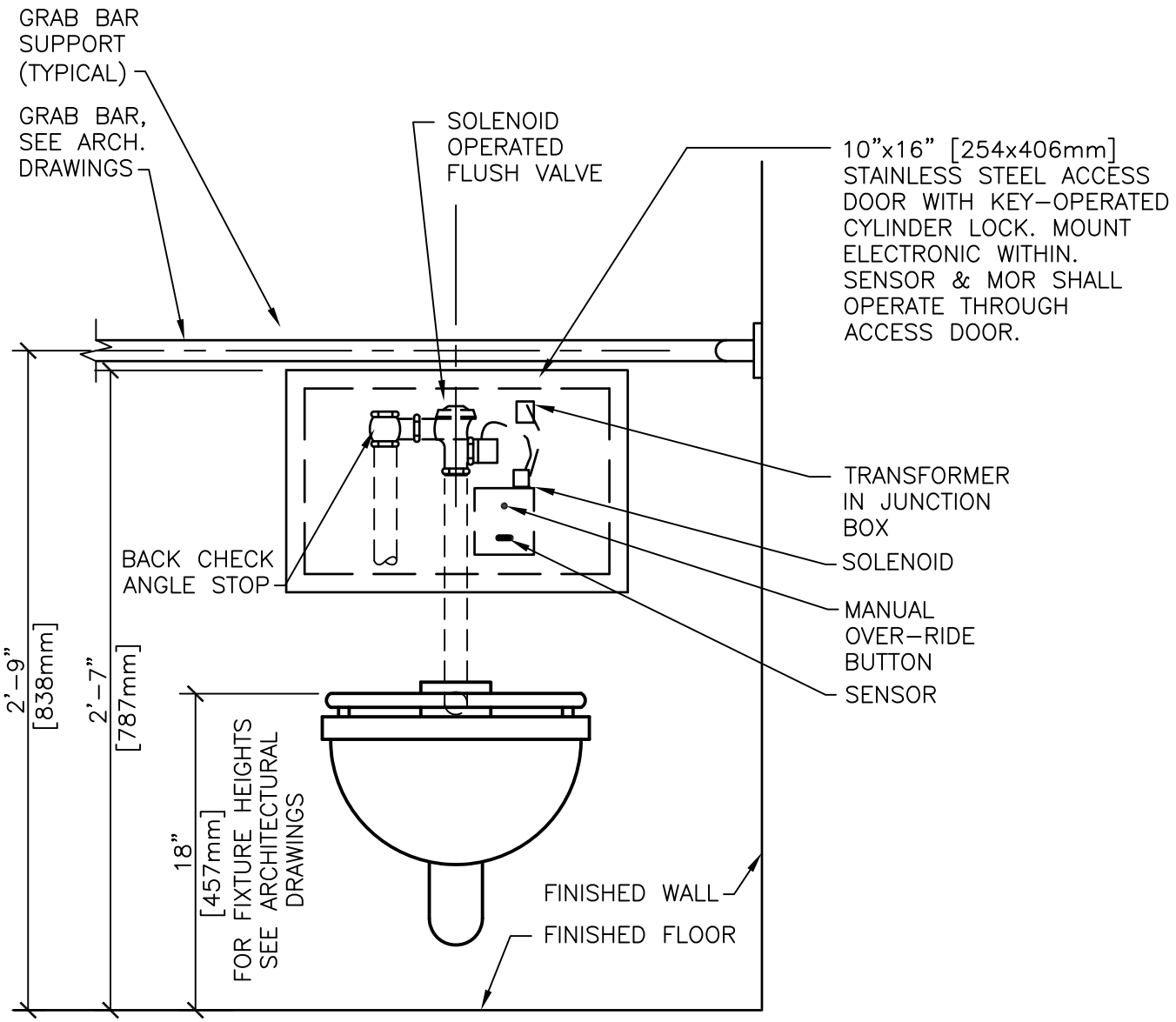

P-112 WATER CLOSET DETAIL - SENSOR OPERATED

#

NTS

Department of Veterans Affairs

DETAIL TITLE / P-112 WATER CLOSET DETAIL - SENSOR OPERATED

SCALE: NONE

DATE ISSUED: DECEMBER 1, 2015 CAD DETAIL NO.: SD224000-04.DWG

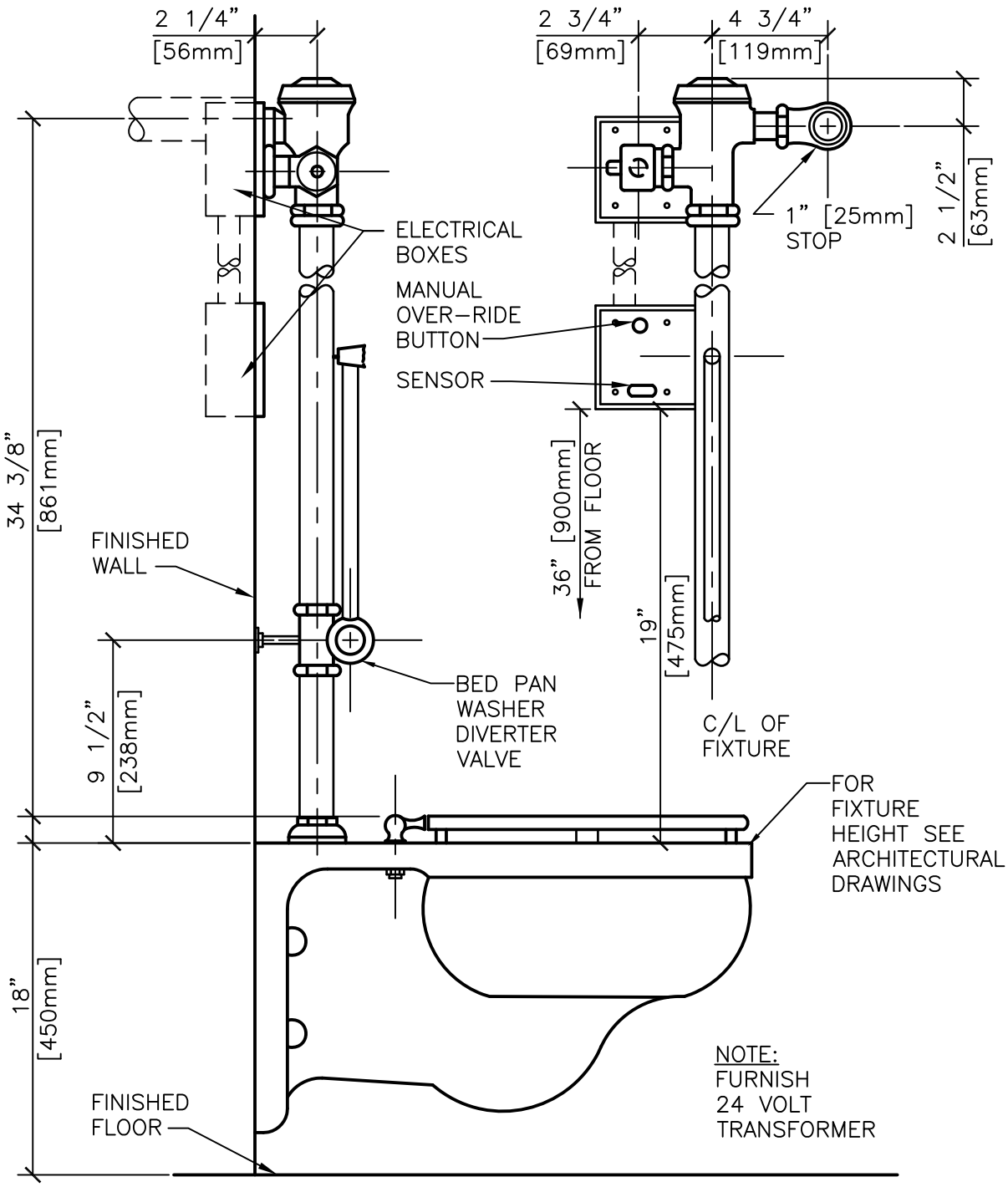

P-113 WATER CLOSET DETAIL - SENSOR OPERATED

#

NTS

Department of Veterans Affairs

DETAIL TITLE / P-113 WATER CLOSET DETAIL - SENSOR OPERATED

SCALE: NONE

DATE ISSUED: DECEMBER 1, 2015 CAD DETAIL NO.: SD224000-05.DWG

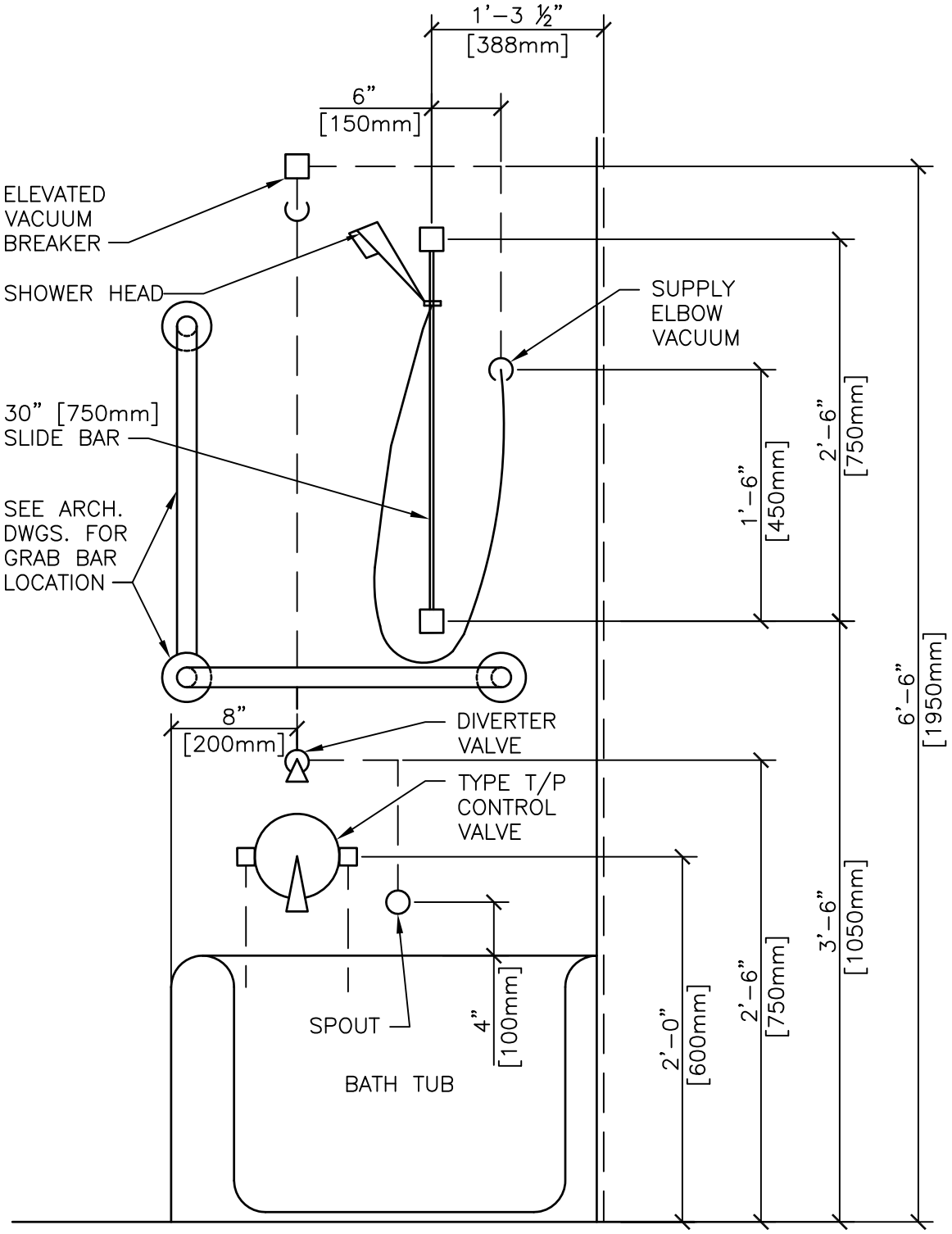

P-302 PATIENT BATHTUB ROUGH-IN

#

NTS

Department of Veterans Affairs

DETAIL TITLE / P-302 PATIENT BATHTUB ROUGH-IN

SCALE: NONE

DATE ISSUED: DECEMBER 1, 2015 CAD DETAIL NO.: SD224000-06.DWG

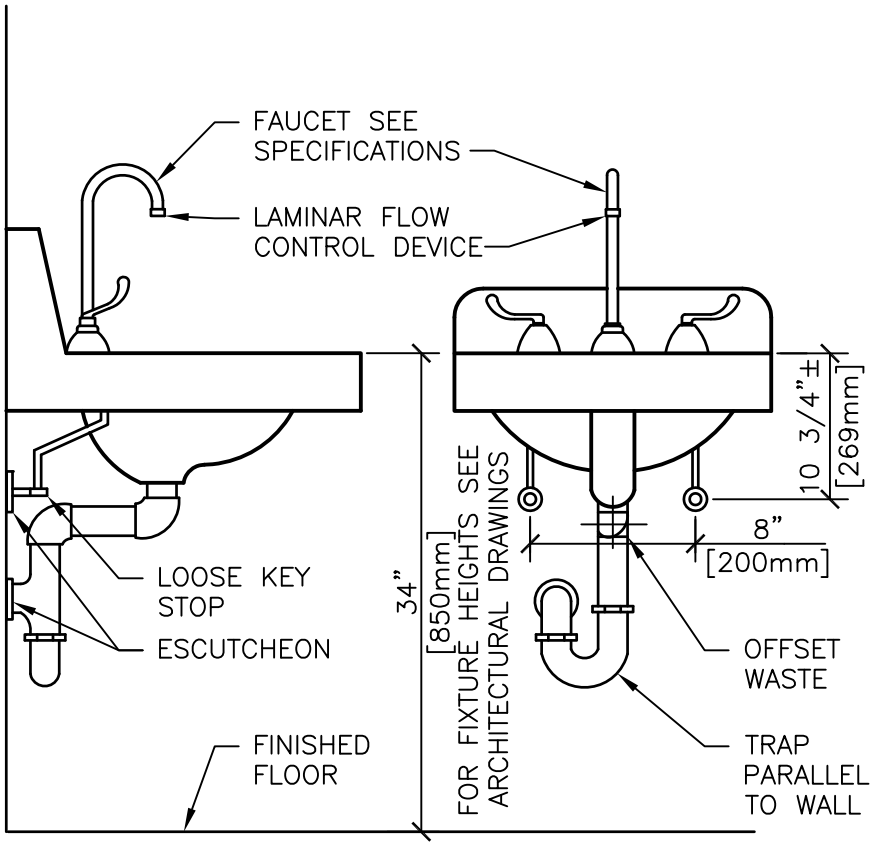

TYPICAL WHEELCHAIR LAVATORY DETAIL

#

NTS

NOTE:
PROVIDE COVER FOR EXPOSED PIPING

Department of Veterans Affairs

DETAIL TITLE / TYPICAL WHEELCHAIR LAVATORY DETAIL

SCALE: NONE

DATE ISSUED: DECEMBER 1, 2015 CAD DETAIL NO.: SD224000-08.DWG

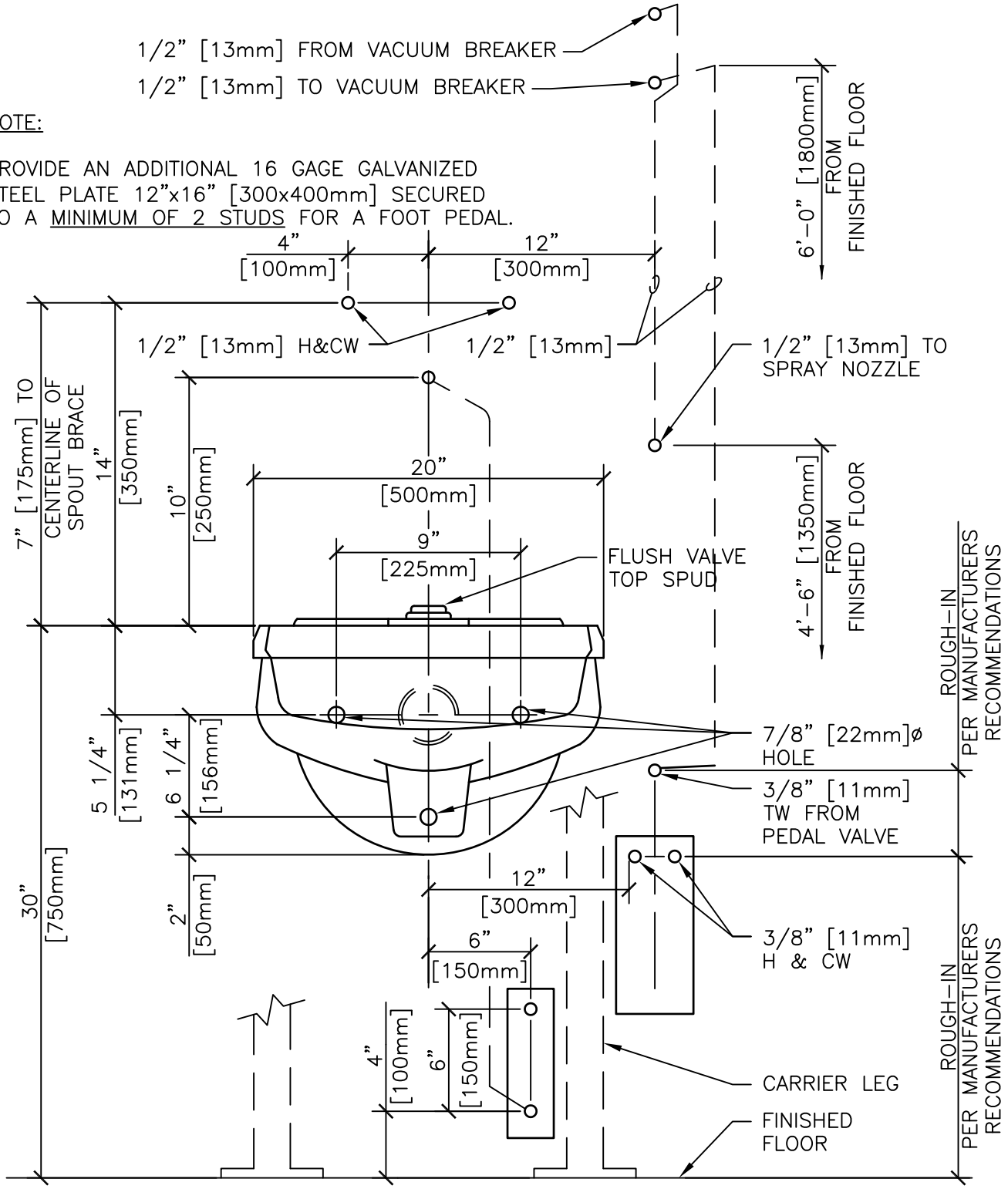

P-505 CLINIC SERVICE SINK ROUGH-IN DETAIL

#

NTS

Department of Veterans Affairs

DETAIL TITLE / P-505 CLINIC SERVICE SINK ROUGH-IN DETAIL

SCALE: NONE

DATE ISSUED: DECEMBER 1, 2015 CAD DETAIL NO.: SD224000-09.DWG

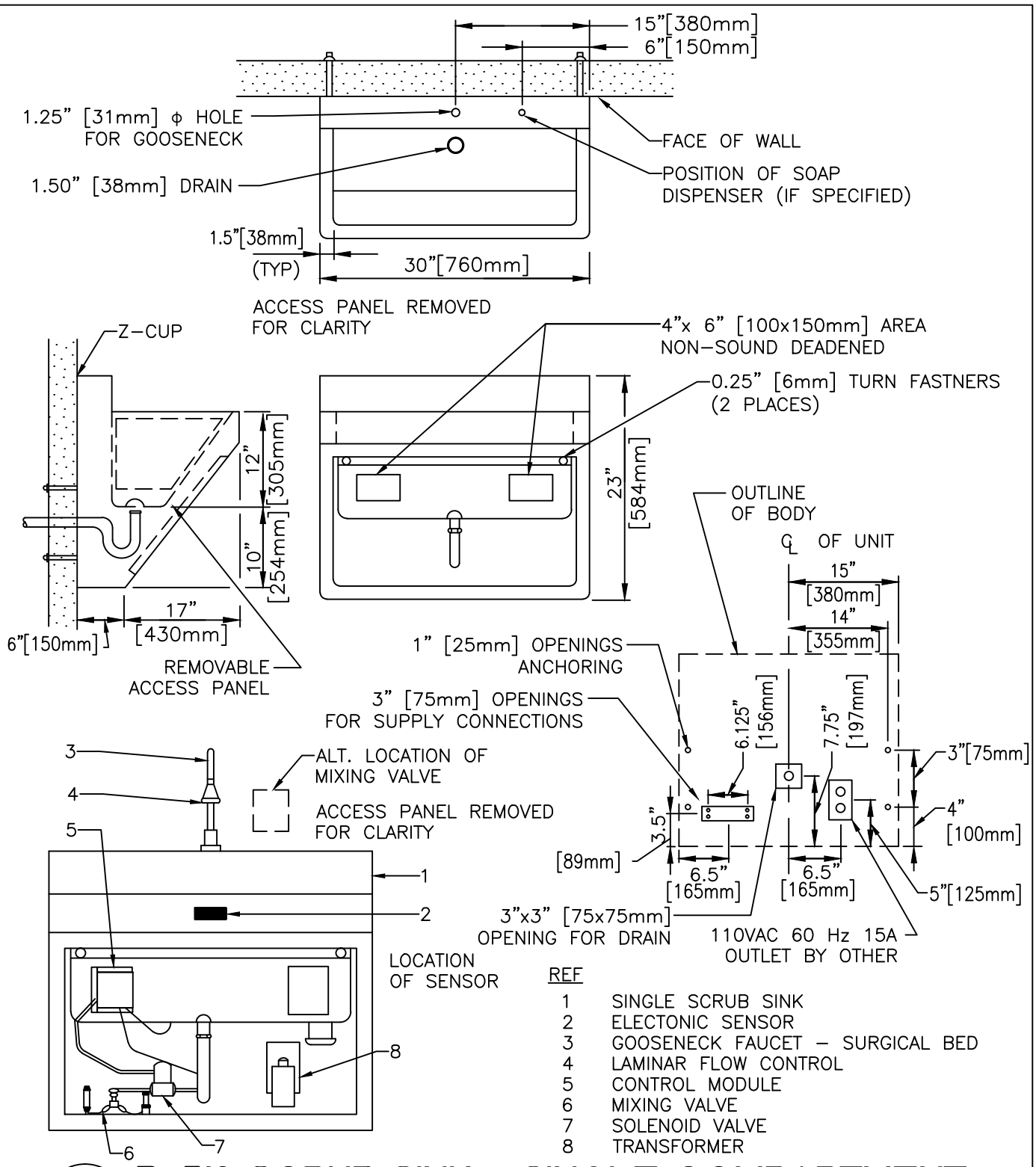

REF	
1	SINGLE SCRUB SINK
2	ELECTONIC SENSOR
3	GOOSENECK FAUCET – SURGICAL BED
4	LAMINAR FLOW CONTROL
5	CONTROL MODULE
6	MIXING VALVE
7	SOLENOID VALVE
8	TRANSFORMER

P-519 SCRUB SINK - SINGLE COMPARTMENT

NTS

VA U.S. Department of Veterans Affairs

DETAIL/TITLE: P-519 SCRUB SINK – SINGLE COMPARTMENT

SCALE: NONE

DATE ISSUED: FEBRUARY 2017 CADD DETAIL NO.: SD224000-10

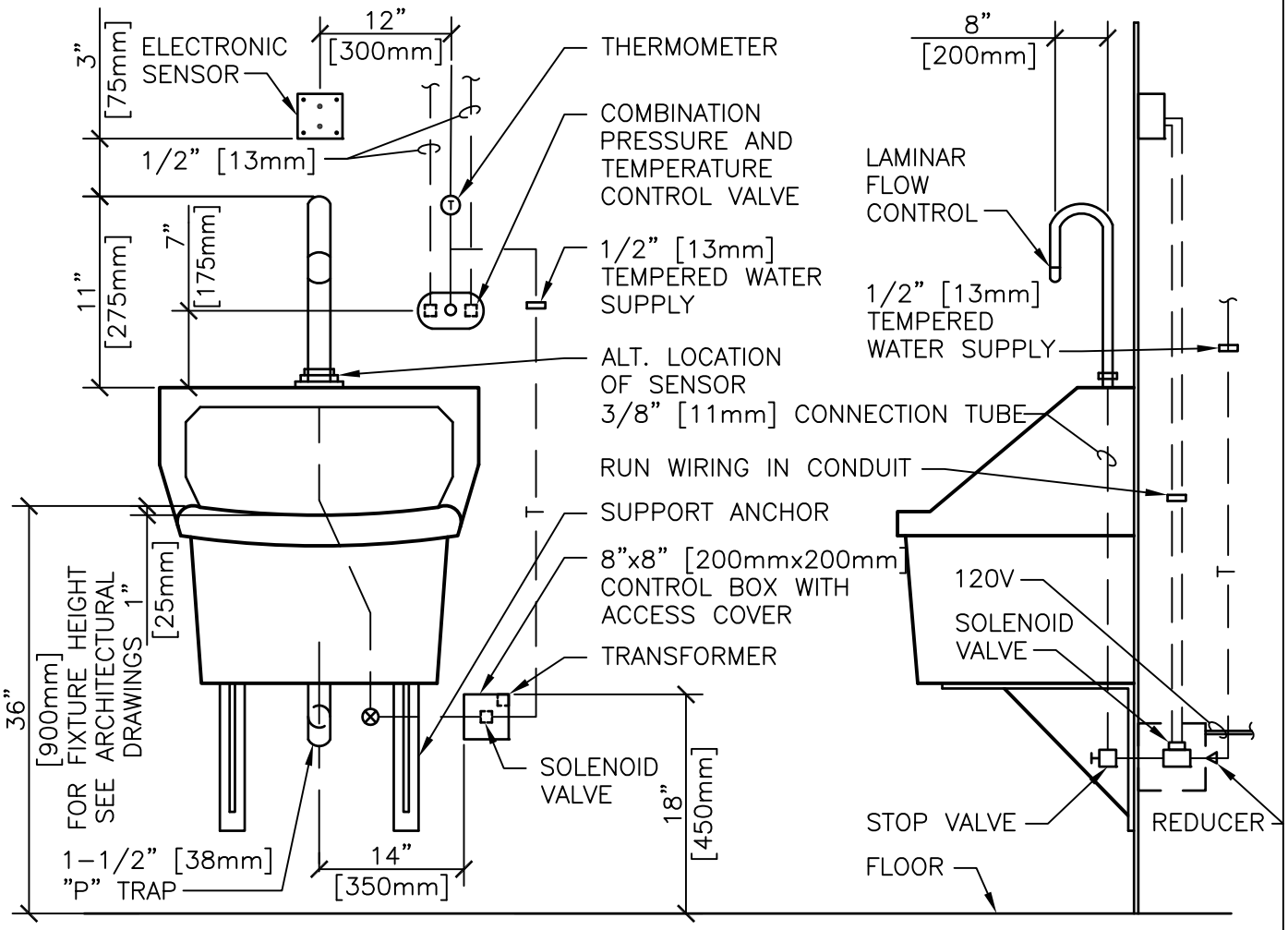

P-520 SURGEONS SCRUB SINK DETAIL

#

NTS

Department of Veterans Affairs

DETAIL TITLE / P-520 SURGEONS SCRUB SINK DETAIL

SCALE: NONE

DATE ISSUED: DECEMBER 1, 2015 CAD DETAIL NO.: SD224000-11.DWG

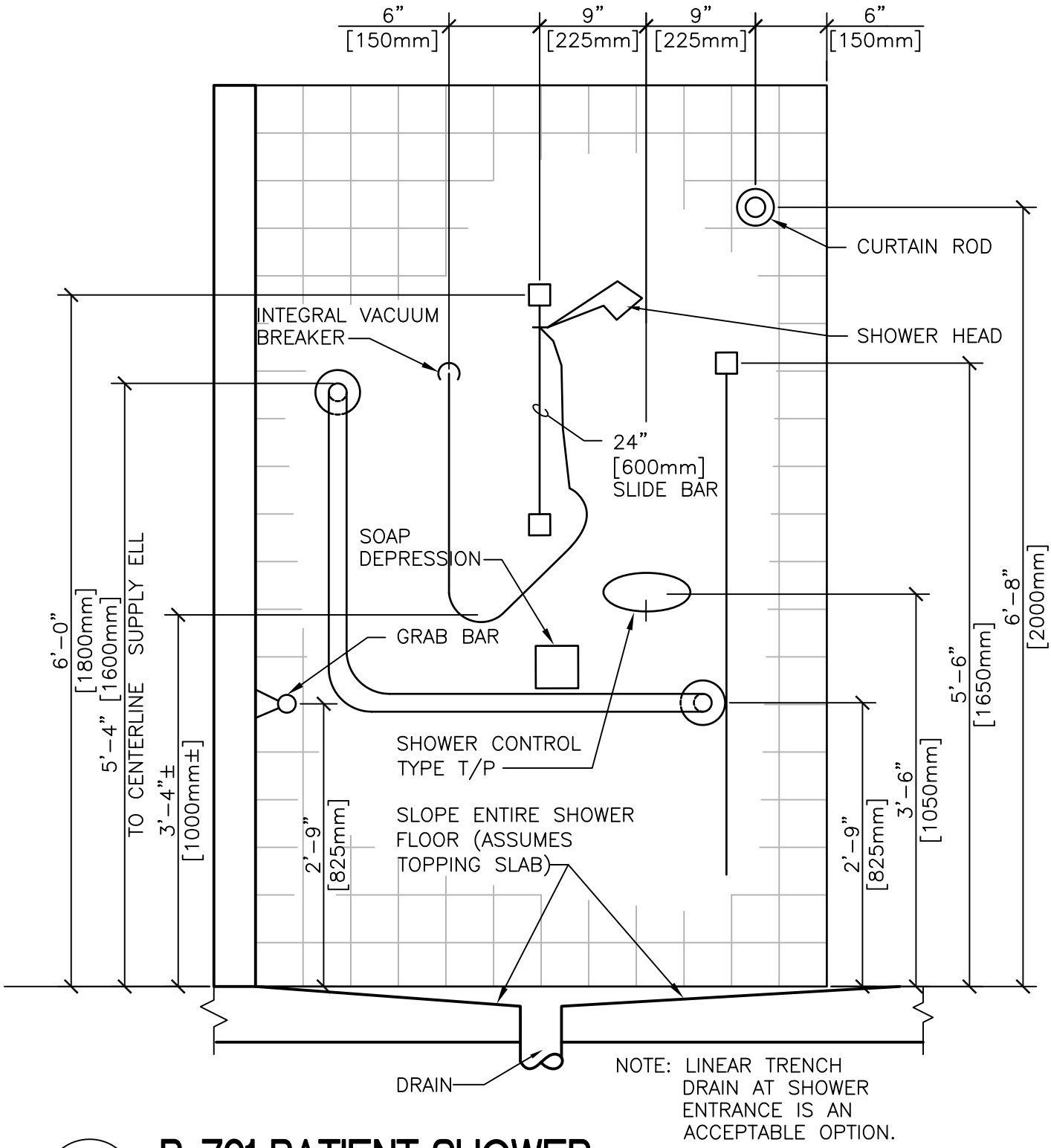

P-701 PATIENT SHOWER

#

NTS

Department of Veterans Affairs

DETAIL TITLE / P-701 PATIENT SHOWER

SCALE: NONE

DATE ISSUED: DECEMBER 1, 2015 CADD DETAIL NO. : SD224000-13.DWG

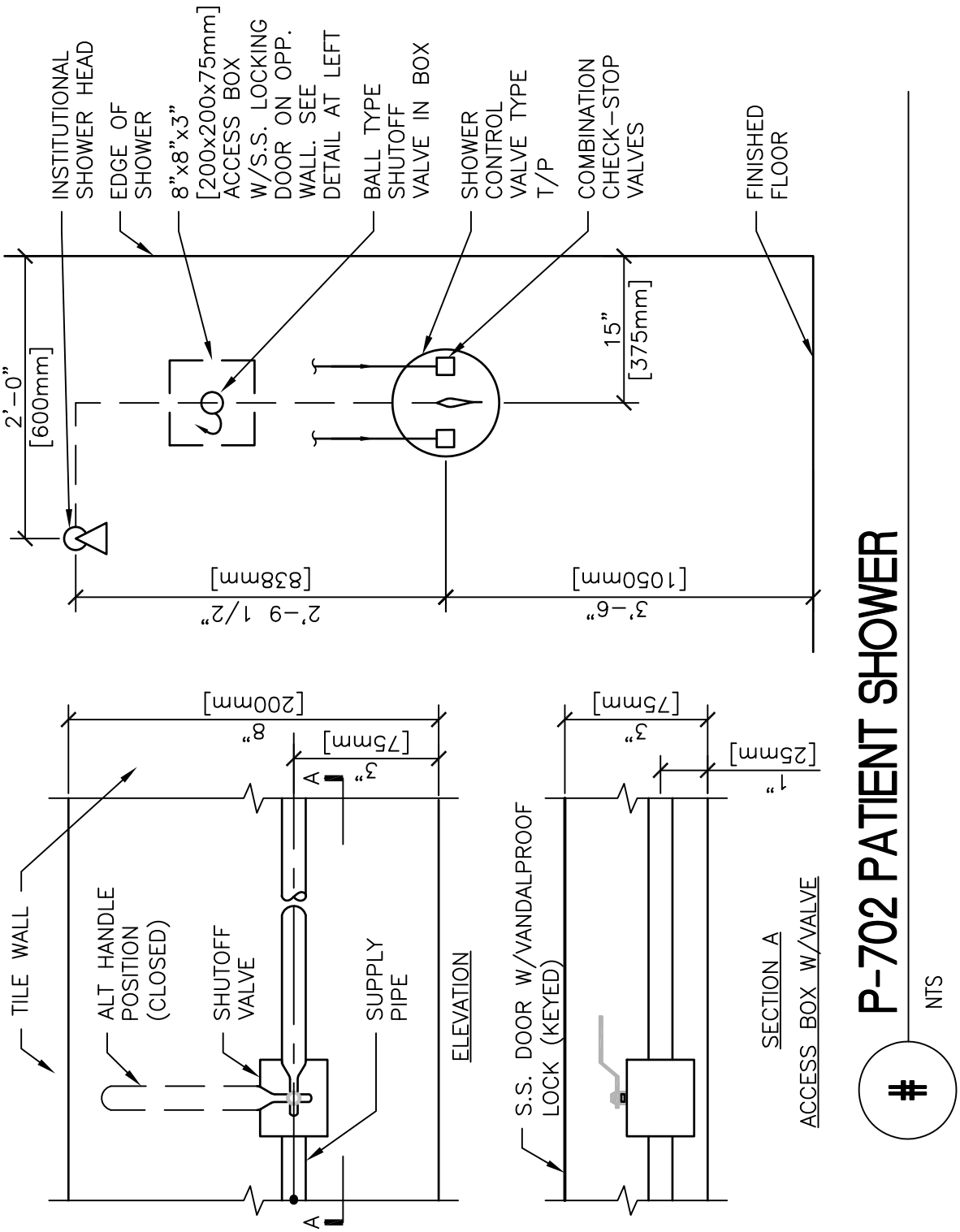

Department of Veterans Affairs

DETAIL TITLE / P-702 PATIENT SHOWER

SCALE: NONE

DATE ISSUED: DECEMBER 1, 2015 CAD DETAIL NO.: SD224000-14.DWG

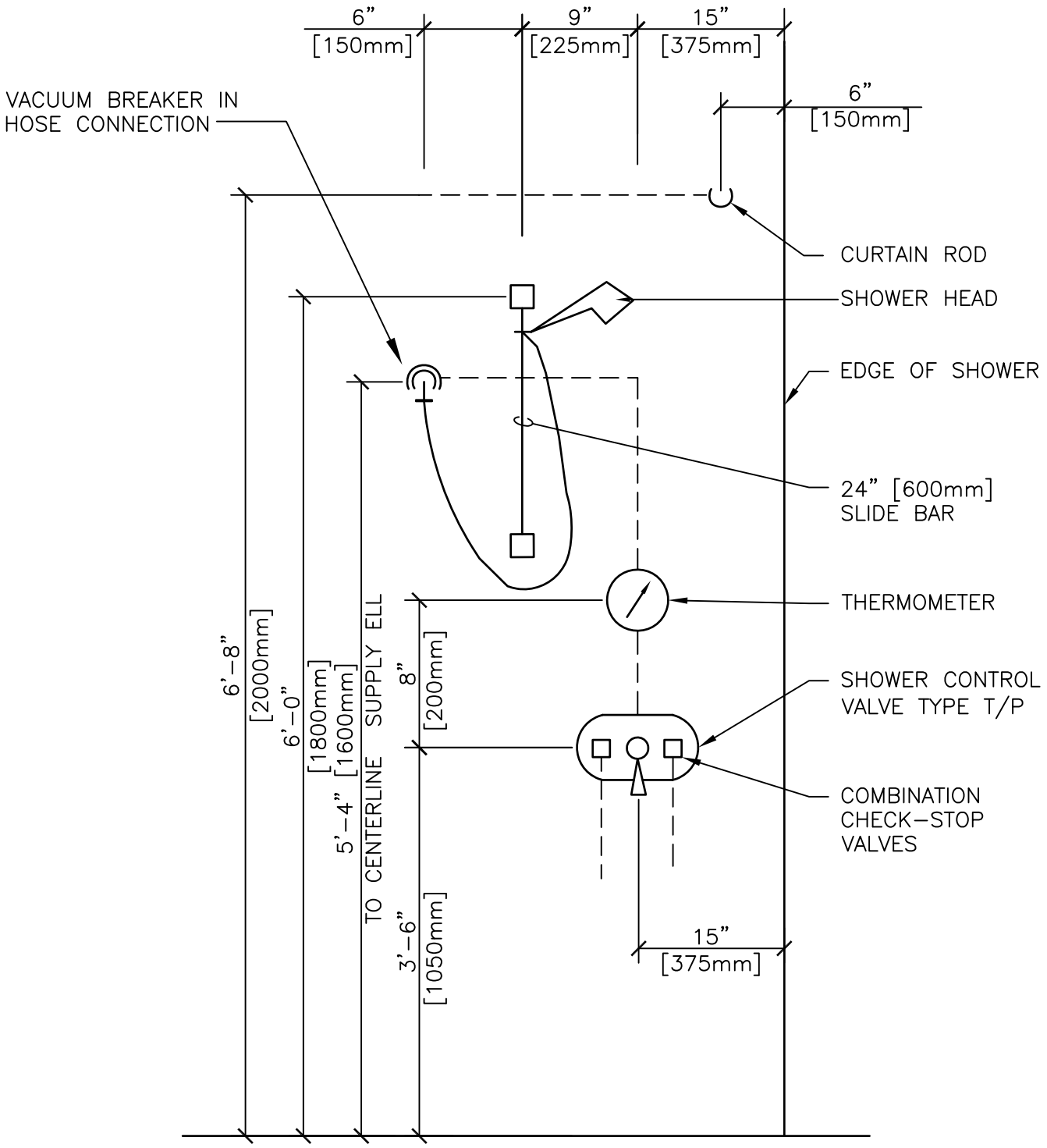

P-711 SHOWER (SPINAL CORD) (HAND HELD)

NTS

Department of Veterans Affairs

DETAIL TITLE / P-711 SHOWER (SPINAL CORD)

SCALE: NONE

DATE ISSUED: DECEMBER 1, 2015 CAD DETAIL NO.: SD224000-15.DWG

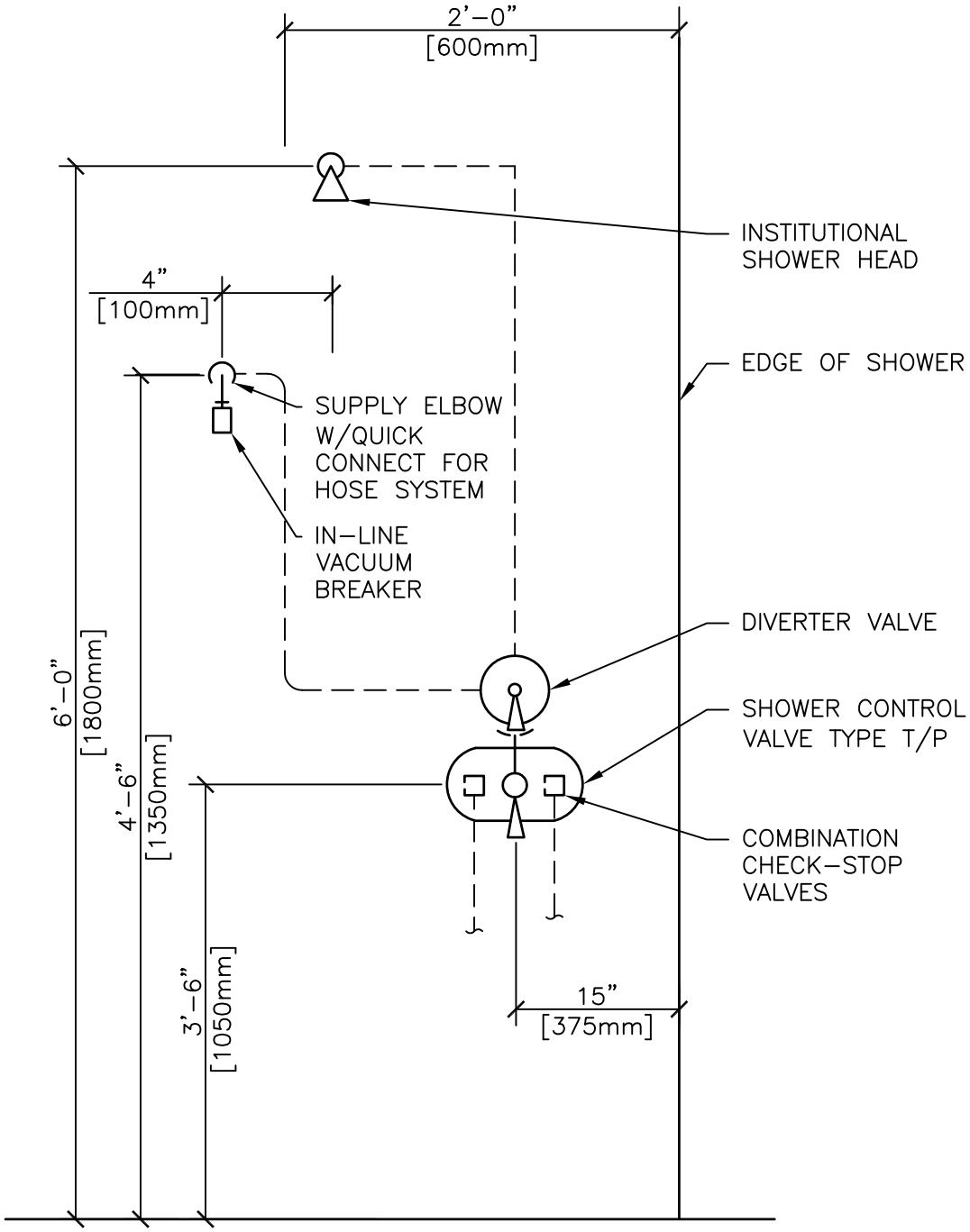

P-703 SHOWER (SPINAL CORD)

NTS

Department of Veterans Affairs

DETAIL TITLE / P-703 SHOWER (SPINAL CORD)

SCALE: NONE

DATE ISSUED: DECEMBER 1, 2015 CAD DETAIL NO.: SD224000-16.DWG

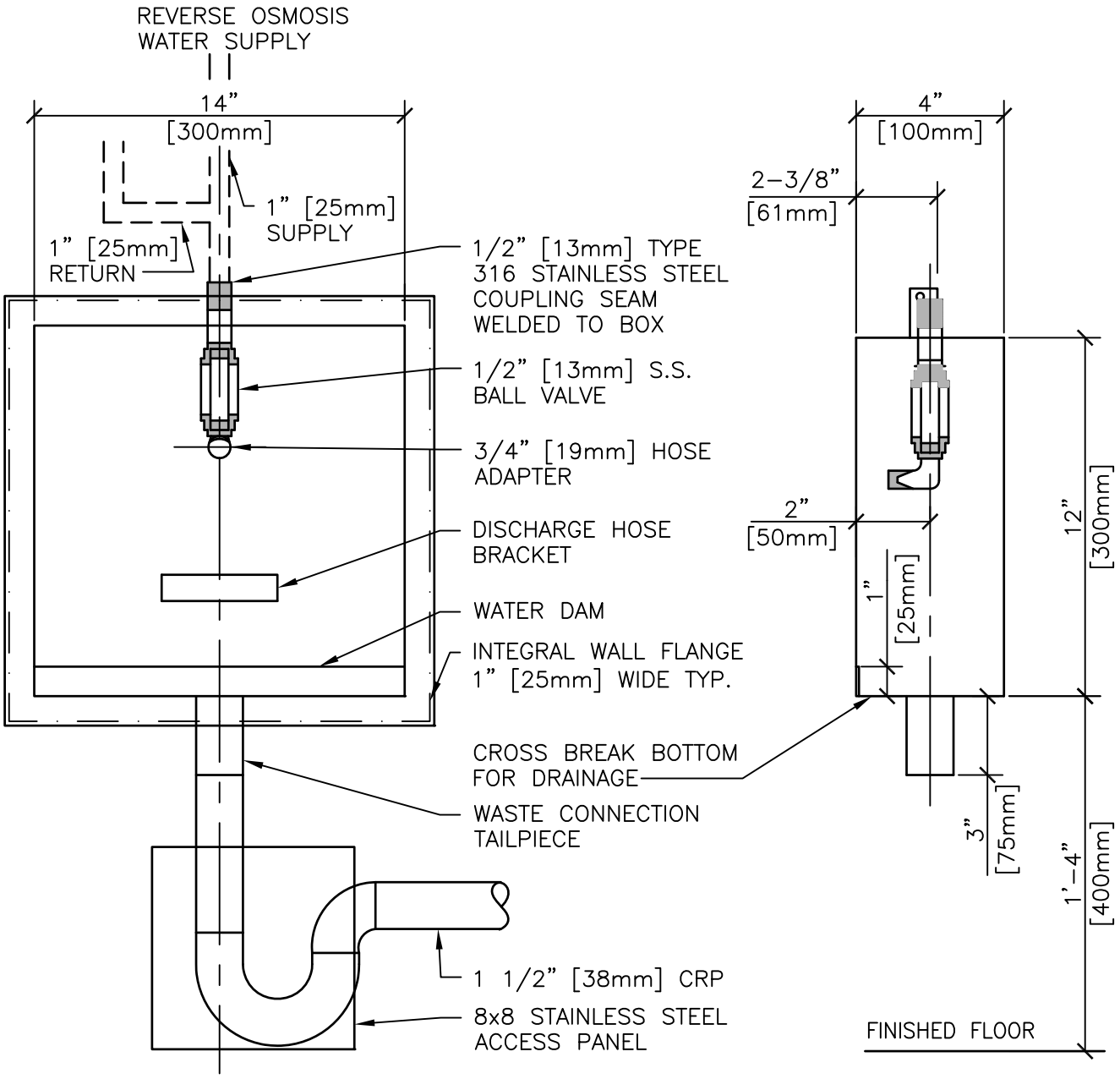

(P-809) DIALYSIS BOX DETAIL

NTS

Department of Veterans Affairs

DETAIL TITLE / (P-809) DIALYSIS BOX DETAIL

SCALE: NONE

DATE ISSUED: DECEMBER 1, 2015 CAD DETAIL NO.: SD224000-17.DWG

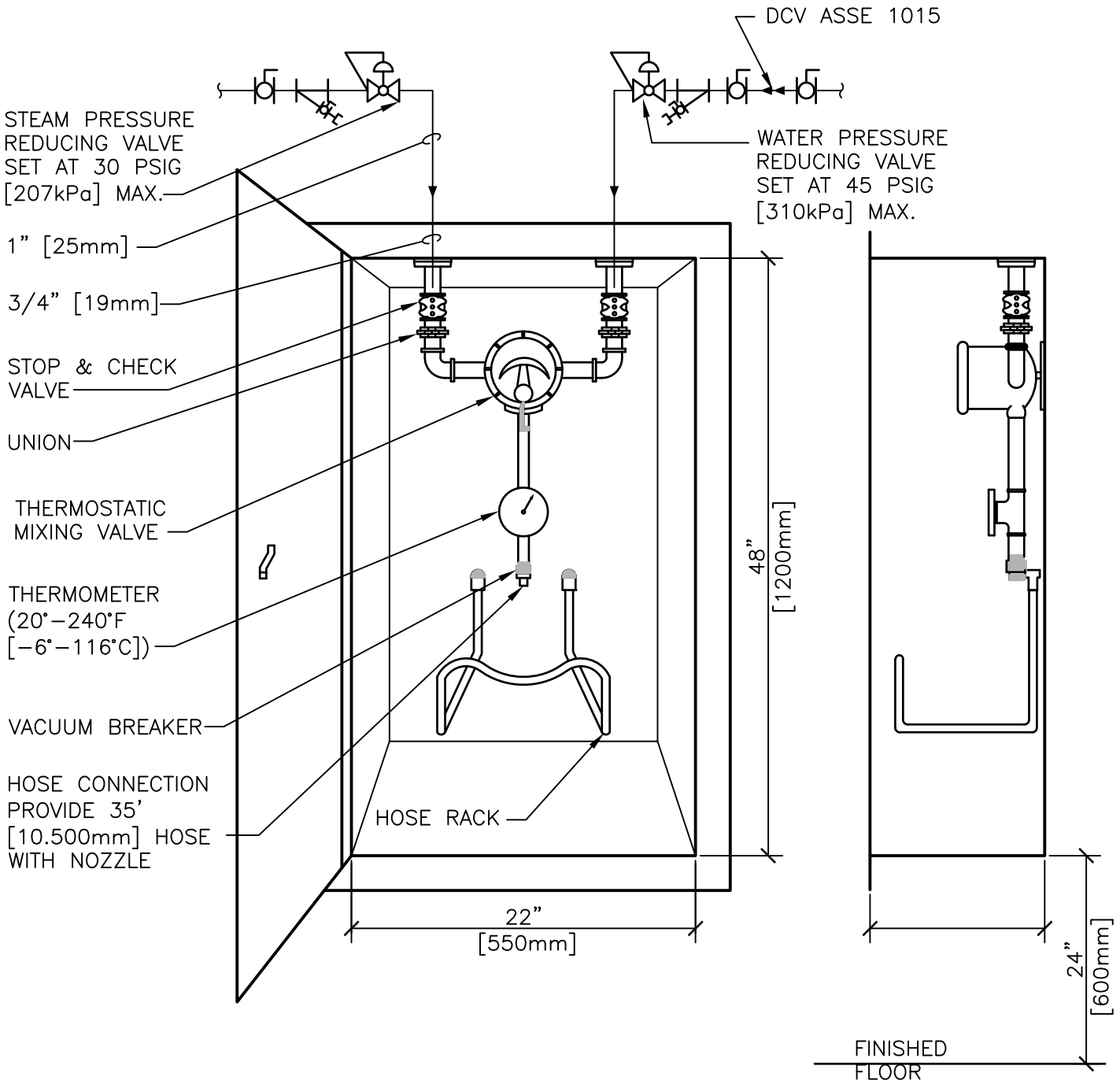

P-810 STEAM AND WATER MIXING VALVE DETAIL

#

NTS

Department of Veterans Affairs

DETAIL TITLE / P-810 STEAM & WATER MIXING VALVE DETAIL

SCALE: NONE

DATE ISSUED: DECEMBER 1, 2015 CAD DETAIL NO.: SD224000-18.DWG

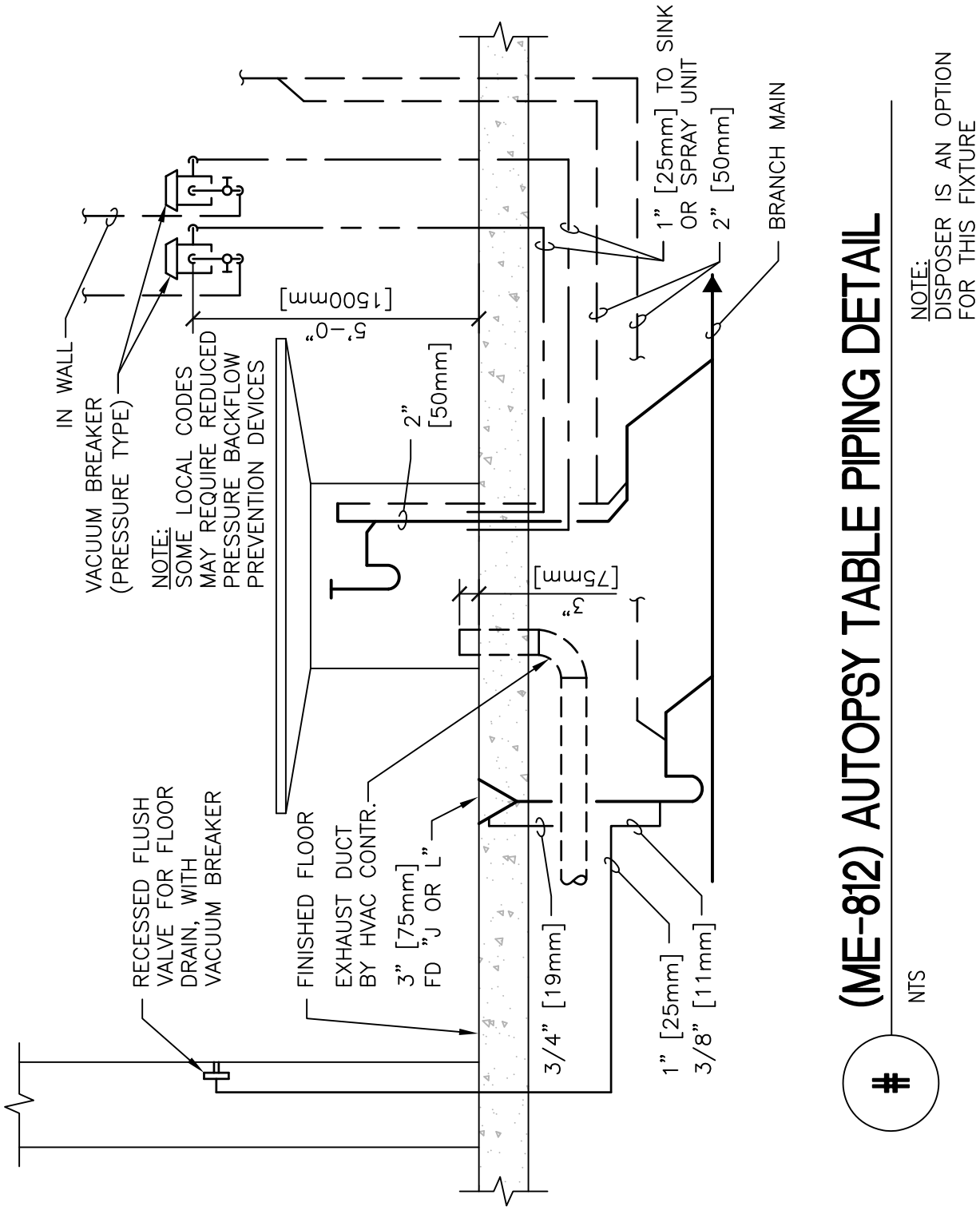

(ME-812) AUTOPSY TABLE PIPING DETAIL

NTS

NOTE:
DISPOSER IS AN OPTION
FOR THIS FIXTURE

Department of Veterans Affairs

DETAIL TITLE / (ME-812) AUTOPSY TABLE PIPING DETAIL

SCALE: NONE

DATE ISSUED: DECEMBER 1, 2015 CAD DETAIL NO.: SD224000-19.DWG

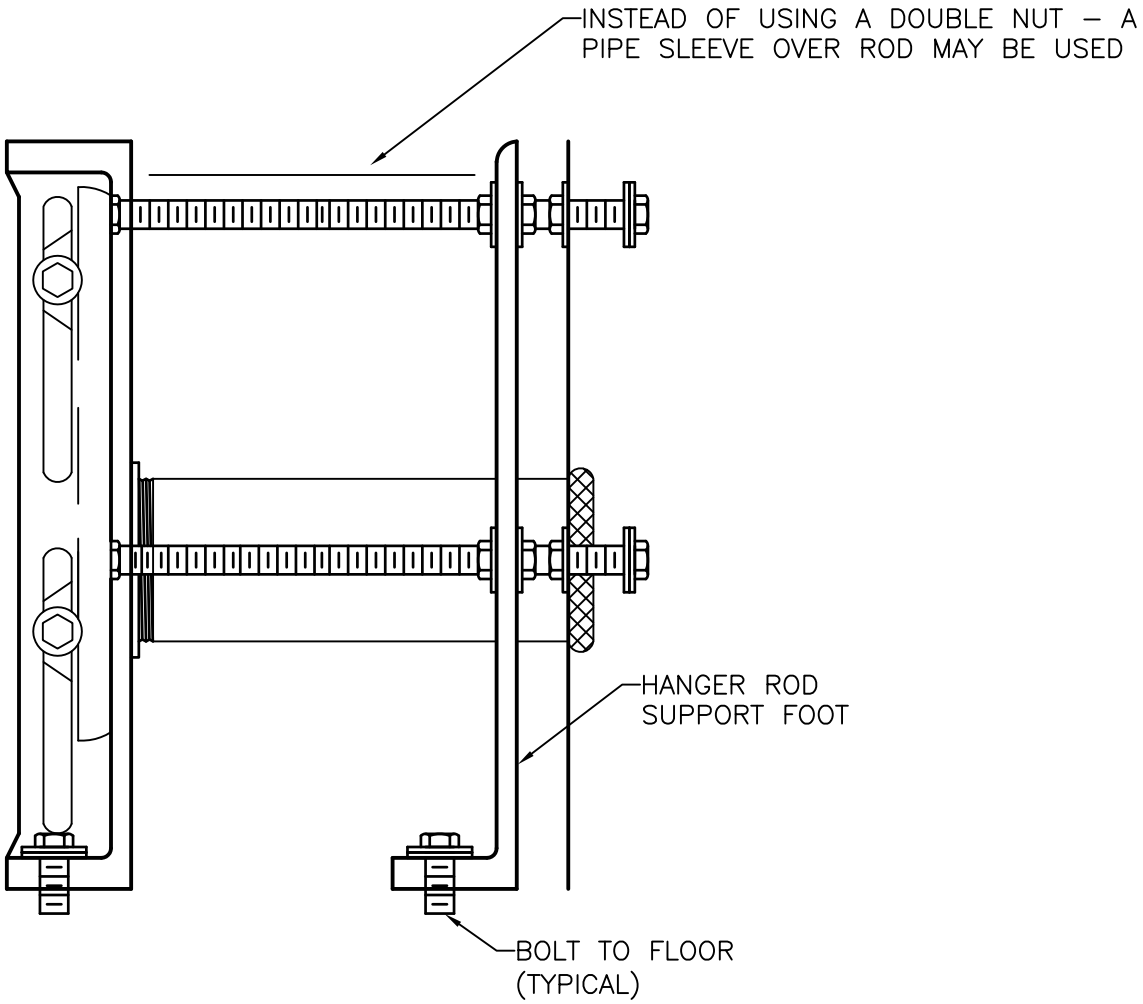

INSTALLATION OF HANGER SUPPORT FOOT

#

NTS

Department of Veterans Affairs

DETAIL TITLE / INSTALLATION OF HANGER SUPPORT FOOT

SCALE: NONE

DATE ISSUED: DECEMBER 1, 2015 CADD DETAIL NO. : SD224000-20.DWG

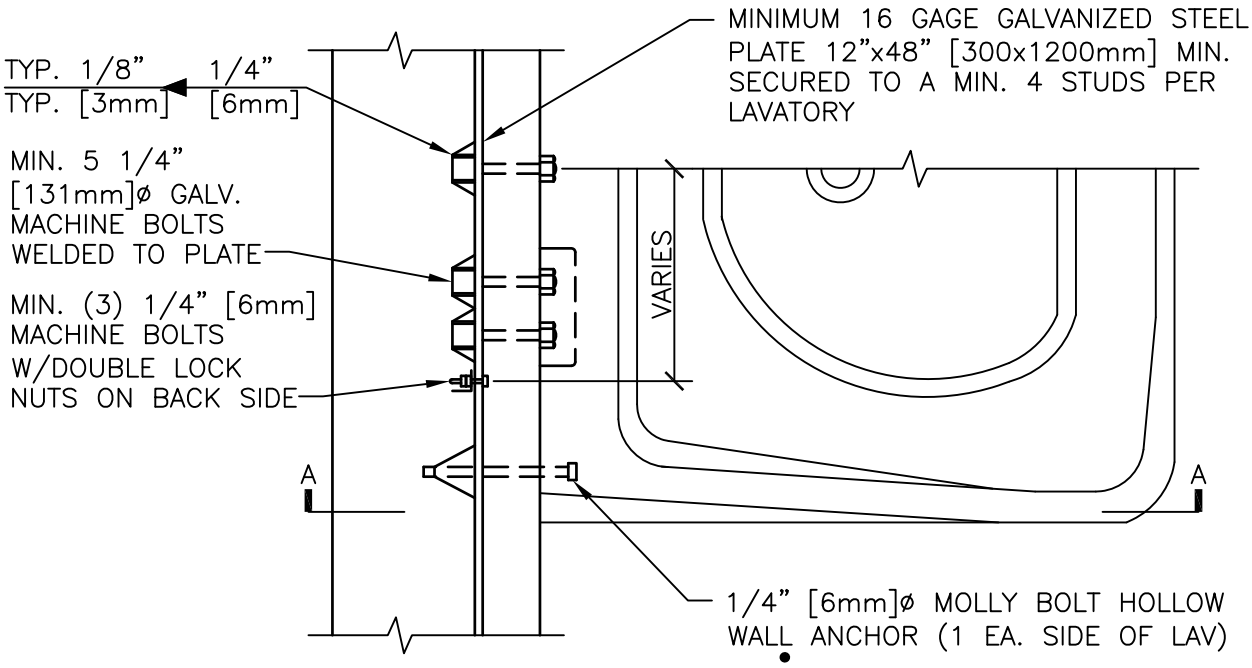

PLAN

NOTE:

1. AT LAVS WITH FOOT PEDAL CONTROLS PROVIDE AN ADDITIONAL 16 GAGE GALVANIZED STEEL PLATE 12"x16" [300x600mm] SECURED TO A MINIMUM OF 2 STUDS PER FOOT PEDAL.
2. PROVIDE 20 GAGE STUDS WHEN HEIGHT EXCEEDS 12'-0" [3600mm]

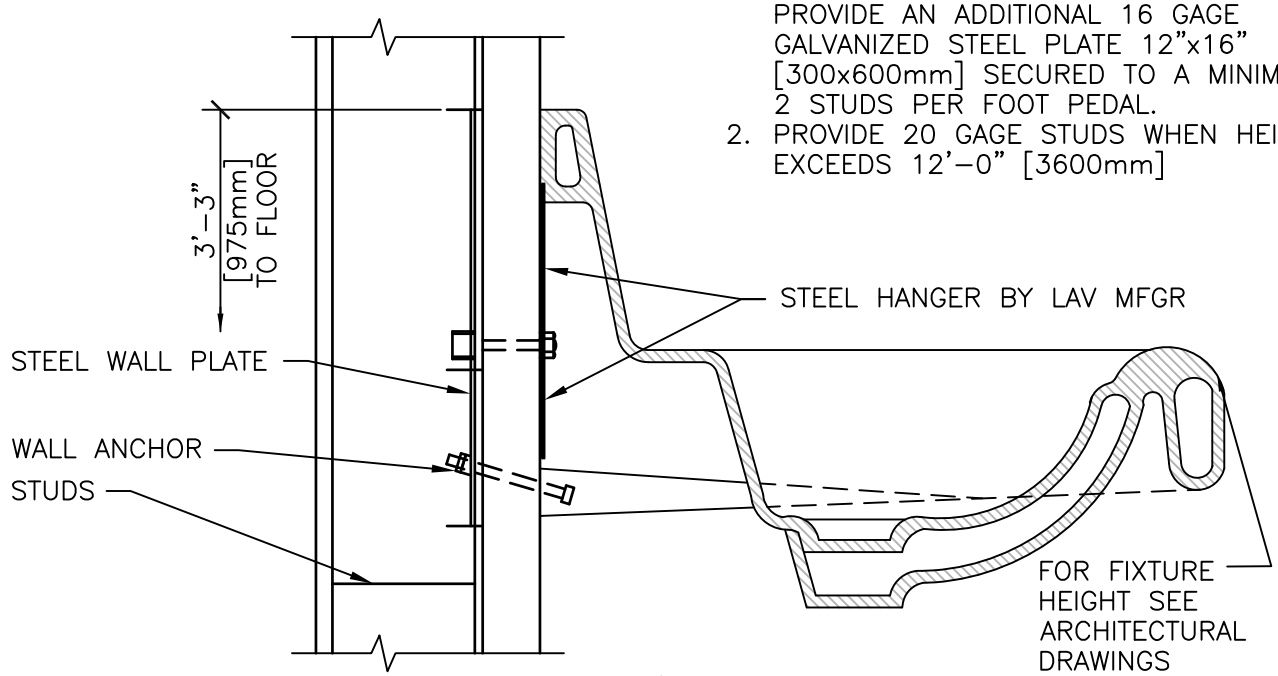

SECTION A

LAVATORY MOUNTING DETAIL

#

NTS

Department of Veterans Affairs

DETAIL TITLE / LAVATORY MOUNTING DETAIL

SCALE: NONE

DATE ISSUED: DECEMBER 1, 2015 CAD DETAIL NO.: SD224000-21.DWG

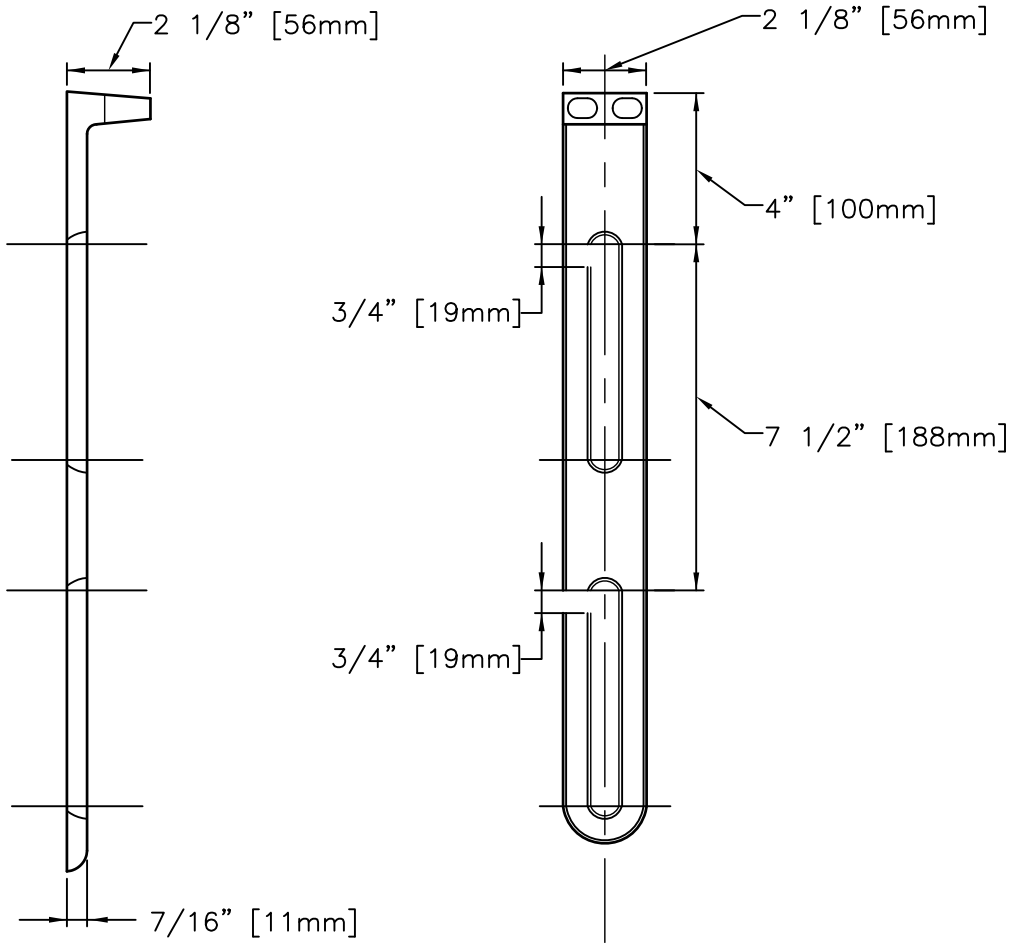

HANGER ROD SUPPORT FOOT

#

NTS

Department of Veterans Affairs

DETAIL TITLE / HANGER ROD SUPPORT FOOT

SCALE: NONE

DATE ISSUED: DECEMBER 1, 2015 CADD DETAIL NO. : SD224000-22.DWG

DENTAL AIR (DA) ALARM PANEL SCHEDULE

LOCATION	TYPE OF PANEL	GAGES	SERVICE INDICATOR LIGHTS
BOILER PLANT CONTROL OFFICE —OR— ENGINEERING CONTROL CENTER (ECC) —OR— OTHER LOCATION WITH ENGINEERING PERSONNEL SUPERVISION —AND— DENTAL RECEPTION AREA	MASTER (SYSTEM) ALARM PANEL	NO	DENTAL AIR (DA) DEW POINT HIGH DA FILTER PRESS DROP HIGH DA HIGH TEMP SHUTDOWN DA LOW LUBRICANT DA CARBON MONOXIDE LEVEL HIGH DA LINE PRESSURE LOW DA LINE PRESSURE HIGH DESICCANT DRYER MALFUNCTION TEST BUTTON

NOTES TO DESIGNER:

1. LOCATE MASTER ALARM PANELS IN CONFORMANCE WITH INDIVIDUAL MEDICAL CENTER'S OPERATING PRACTICES FOR CRITICAL ALARM LOCATIONS.

2. INDICATE ROOM NUMBERS WHERE PANELS ARE TO BE LOCATED.

DENTAL AIR ALARM PANEL SCHEDULE

NTS

U.S. Department of Veterans Affairs

DETAIL TITLE / DENTAL AIR ALARM PANEL SCHEDULE

SCALE: NONE

DATE ISSUED: SEPTEMBER 1, 2020 CAD DETAIL NO.: SD226119_74-01.DWG

MEDICAL GAS ALARM PANEL SCHEDULE

LOCATION	TYPE OF PANEL	GAGES	SERVICE INDICATOR LIGHTS
BOILER PLANT CONTROL OFFICE —OR— ENGINEERING CONTROL CENTER (ECC) —OR— OTHER LOCATION WITH ENGINEERING PERSONNEL SUPERVISION —AND— INTENSIVE CARE NURSING —OR— FIRE STATION —OR— PHONE SWITCHBOARD —OR— SECURITY OFFICE	MASTER (SYSTEM) ALARM PANEL	NO	LIQUID OXYGEN LEVEL LOW OXYGEN RESERVE SWITCHOVER OXYGEN RESERVE IN USE OXYGEN RESERVE LOW LIQUID LEVEL OXYGEN RESERVE PRESSURE LOW OXYGEN MAIN LINE PRESSURE LOW OXYGEN MAIN LINE PRESSURE HIGH NITROUS OXIDE CHANGE OVER TO SECONDARY NITROUS OXIDE RESERVE IN USE NITROUS OXIDE MAIN LINE PRESSURE LOW NITROUS OXIDE MAIN LINE PRESSURE HIGH NITROGEN CHANGE OVER TO SECONDARY NITROGEN RESERVE IN USE NITROGEN MAIN LINE PRESSURE LOW NITROGEN MAIN LINE PRESSURE HIGH MEDICAL AIR DEWPOINT HIGH MA COMPRESSOR MALFUNCTION MEDICAL AIR MAIN LINE PRESSURE LOW MEDICAL AIR MAIN LINE PRESSURE HIGH MA SYSTEM CARBON MONOXIDE HIGH DESICCANT DRYER MALFUNCTION DESICCANT DRYER POST FILTER DIRTY DESICCANT DRYER INLET FILTER DIRTY MAIN LINE FILTER BANK DIRTY MA REFRIGERATED DRYER POST FILTER DIRTY AFTER COOLER HIGH AIR TEMPERATURE MEDICAL VACUUM LINE VACUUM LOW MEDICAL VACUUM FILTER BACK PRESSURE TEST BUTTON
SURGERY CONTROL ROOM	AREA ALARM PANEL	YES	OXYGEN LINE PRESSURE ABNORMAL NITROUS OXIDE LINE PRESSURE ABNORMAL NITROGEN LINE PRESSURE ABNORMAL MEDICAL AIR LINE PRESSURE ABNORMAL MEDICAL VACUUM LINE VACUUM LOW TEST BUTTON
RECOVERY ROOMS CRITICAL CARE AREAS EMERGENCY AREAS PATIENT AREAS	AREA (ZONE) ALARM PANEL	YES	OXYGEN LINE PRESSURE ABNORMAL NITROUS OXIDE LINE PRESSURE ABNORMAL NITROGEN LINE PRESSURE ABNORMAL MEDICAL AIR LINE PRESSURE ABNORMAL MEDICAL VACUUM LINE VACUUM LOW TEST BUTTON

DESIGNER'S NOTES:

1. LOCATE MASTER ALARM PANELS IN CONFORMANCE WITH INDIVIDUAL MEDICAL CENTER OPERATING PRACTICES FOR CRITICAL ALARM LOCATIONS.
2. INDICATE ROOM NUMBERS WHERE PANELS ARE TO BE LOCATED.
3. ADD ADDITIONAL MIXED GAS ALARMS AS REQUIRED TO THE MASTER AND AREA ALARM PANELS.

Department of Veterans Affairs

DETAIL TITLE / MEDICAL GAS ALARM PANEL SCHEDULE

SCALE: NONE

DATE ISSUED: DECEMBER 1, 2015 CAD DETAIL NO.: SD226200-01.DWG

MEDICAL GAS ALARM PANEL SCHEDULE, CONTINUED

LOCATION	TYPE OF PANEL	GAGES	SERVICE INDICATOR LIGHTS
BOILER PLANT CONTROL OFFICE —OR— ENGINEERING CONTROL CENTER (ECC) —OR— OTHER LOCATION WITH ENGINEERING PERSONNEL SUPERVISION —AND— INTENSIVE CARE NURSING —OR— FIRE STATION —OR— PHONE SWITCHBOARD —OR— SECURITY OFFICE	MASTER (SYSTEM) ALARM PANEL	NO	CARBON DIOXIDE MAIN LINE PRESSURE HIGH CARBON DIOXIDE MAIN LINE PRESSURE LOW CARBON DIOXIDE CHANGEOVER TO SECONDARY SUPPLY CARBON DIOXIDE MAIN SUPPLY LESS THAN 1 DAY (LOW CONTENTS) CARBON DIOXIDE RESERVE IN USE CARBON DIOXIDE RESERVE SUPPLY LESS THAN 1 DAY (LOW CONTENTS) CARBON DIOXIDE RESERVE PRESSURE LOW (NOT FUNCTIONAL) MEDICAL AIR PRODUCTION STOP MEDICAL AIR CHANGEOVER TO SECONDARY SUPPLY OXYGEN CHANGE OVER TO SECONDARY SUP. OXYGEN MAIN SUPPLY LESS THAN 1 DAY (LOW CONTENTS) OXYGEN RESERVE SUPPLY LESS THAN 1 DAY (LOW CONTENTS) NITROUS OXIDE MAIN SUPPLY LESS THAN 1 DAY (LOW CONTENTS) NITROUS OXIDE RESERVE SUPPLY LESS THAN 1 DAY (LOW CONTENTS) NITROUS OXIDE RESERVE PRESSURE LOW (NOT FUNCTIONAL) MEDICAL—SURGICAL MAIN LINE VACUUM LOW WAGD MAIN LINE VACUUM LOW INSTRUMENT AIR CYLINDER RESERVE IN USE INSTRUMENT AIR CYLINDER RESERVE LESS THAN 1 HOUR SUPPLY NITROGEN MAIN SUPPLY LESS THAN 1 DAY (LOW CONTENTS) NITROGEN RESERVE SUPPLY LESS THAN 1 DAY (LOW CONTENTS) NITROUS OXIDE RESERVE PRESSURE LOW

DESIGNER'S NOTES:

1. LOCATE MASTER ALARM PANELS IN CONFORMANCE WITH INDIVIDUAL MEDICAL CENTER OPERATING PRACTICES FOR CRITICAL ALARM LOCATIONS.
2. INDICATE ROOM NUMBERS WHERE PANELS ARE TO BE LOCATED.
3. ADD ADDITIONAL MIXED GAS ALARMS AS REQUIRED TO THE MAIN AND AREA ALARM PANELS.

GALVANIZED STEEL LIQUID SEPERATOR TANKS WITH AUTO PUMP AND ELECTRIC SURGE CONTROL (ALSO AVAILABLE WITH SOLENOID CONTROL)

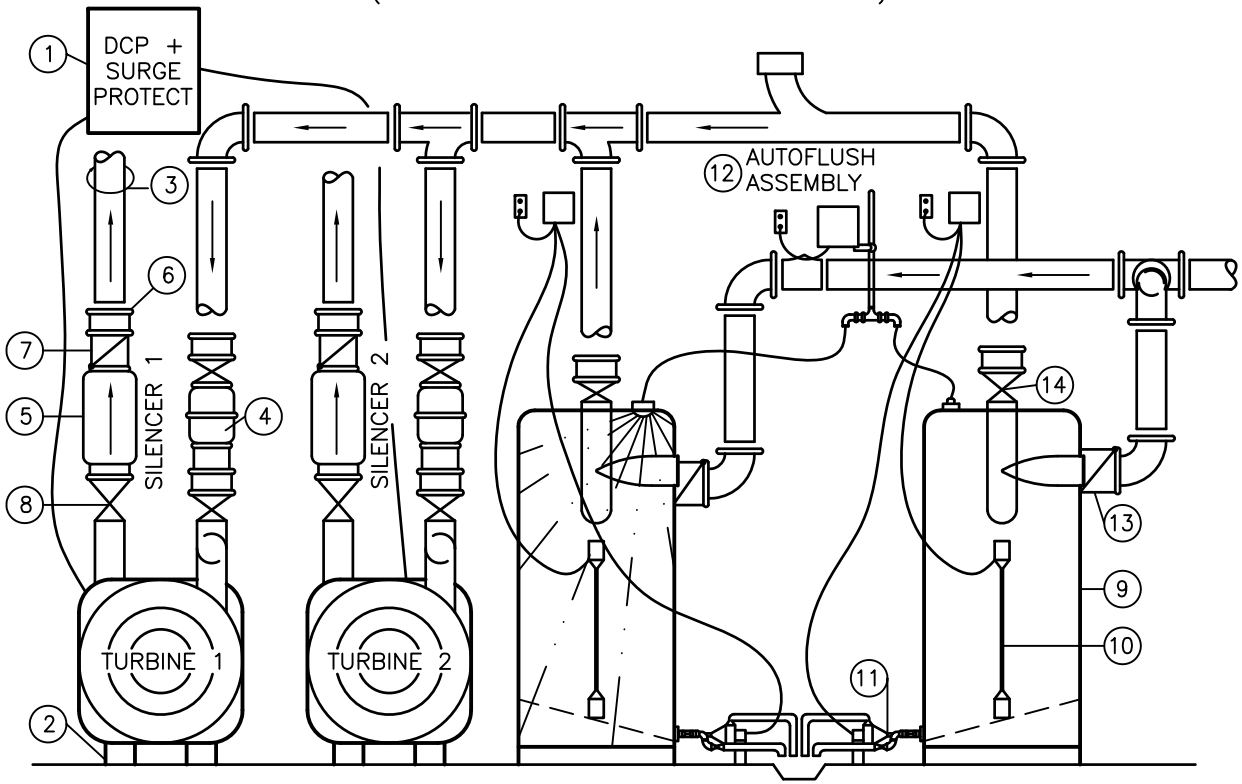

PARTS LIST

ITEM NO.	PART NO.	DESCRIPTION
1	DCP	DUPLEX ELEC. MOTOR MOTOR CONTROL PANEL
2	AIP	ISOLATOR PAD
3	TET	TURBO EXHAUSTER
4	ASV	MECHANICAL ANTI–SURGE VALVE
5	AEX	AIR DISCHARGE SILENCER
6	RPL	FLEXIBLE PLUMBING ISOLATOR
7	ACV	DIRECTIONAL FLOW CHECK VALVE

PARTS LIST

ITEM NO.	PART NO.	DESCRIPTION
8	ABV	THROTTLING VALVE
9	SLG	CYCLONIC LIQUID SEPARATOR
10	FSA	ELECTRONIC LIQUID LEVEL SENSOR (OPT)
11	SV–300	SOLENOID VALVE ELECTRONIC LIQUID LEVEL
12	AF–300	SOLID STATE AUTO–FLUSH ASSEMBLY
13	ACV	CHECK VALVE
14	ACV	DIRECTIONAL FLOW VALVE

ORAL EVACUATION SYSTEM PIPING DETAIL

#

NTS

Department of Veterans Affairs

DETAIL TITLE / ORAL EVACUATION SYSTEM PIPING DETAIL

SCALE: NONE

DATE ISSUED: DECEMBER 1, 2015 CAD DETAIL NO.: SD226219_74–01.DWG

LABORATORY GAS ALARM PANEL SCHEDULE

LOCATION	TYPE OF PANEL	GAGES	SERVICE INDICATOR LIGHTS
BOILER PLANT CONTROL OFFICE —OR— ENGINEERING CONTROL CENTER (ECC) —OR— OTHER LOCATION WITH ENGINEERING PERSONNEL SUPERVISION —AND— FIRE STATION —OR— TELEPHONE SWITCHBOARD —OR— SECURITY OFFICE	MASTER (SYSTEM)	NO	LA AIR DEW POINT HIGH LA AIR CARBON MONOXIDE HIGH LA AIR DESICCANT DRYER MALFUNCTION LA AIR DESICCANT DRYER POST FILTER DIRTY LA REFRIGERATED DRYER POST FILTER DIRTY LA AIR COMPRESSOR MALFUNCTION LA AFTERCOOLER HIGH TEMP LA DESICCANT DRYER INLET FILTER DIRTY LA MAIN LINE FILTER BANK DIRTY LA PRESSURE HIGH LA PRESSURE LOW LA VACUUM FILTER BACKPRESSURE LA VACUUM LINE VACUUM LOW (SPECIAL GAS) LINE PRESSURE LOW (SPECIAL GAS) LINE PRESSURE HIGH TEST BUTTON

NOTES TO DESIGNER:

1. LOCATE MASTER ALARM PANELS IN CONFORMANCE WITH INDIVIDUAL MEDICAL CENTER'S OPERATING PRACTICES FOR CRITICAL ALARM LOCATIONS.

2. INDICATE ROOM NUMBERS WHERE PANELS ARE TO BE LOCATED.

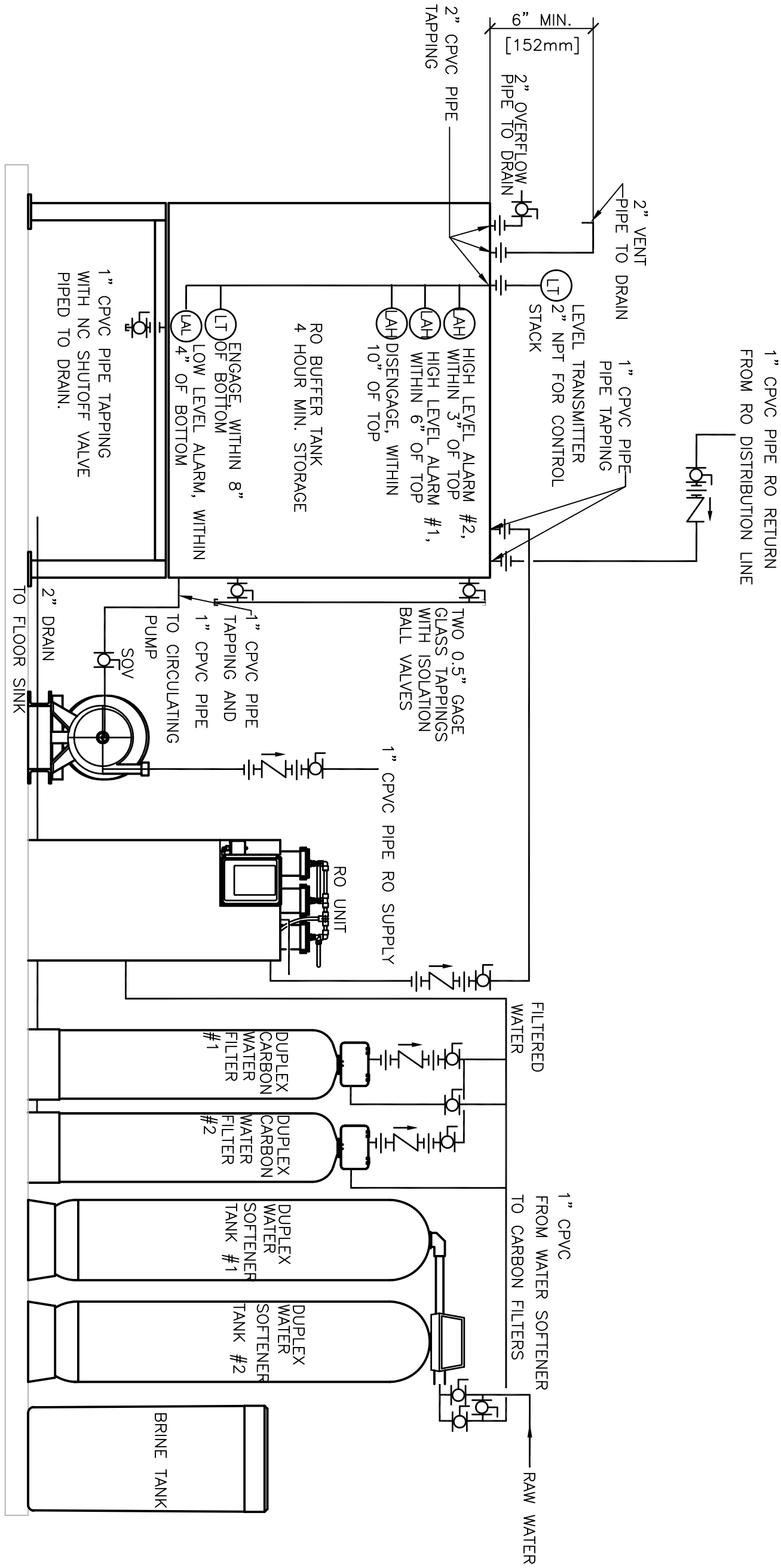

REVERSE OSMOSIS PACKAGE DETAIL

#

NTS

Department of Veterans Affairs

DETAIL TITLE / REVERSE OSMOSIS PACKAGE DETAIL

SCALE: NONE

DATE ISSUED: DECEMBER 1, 2015

CAD DETAIL NO.: SD226719_16-01.DWG