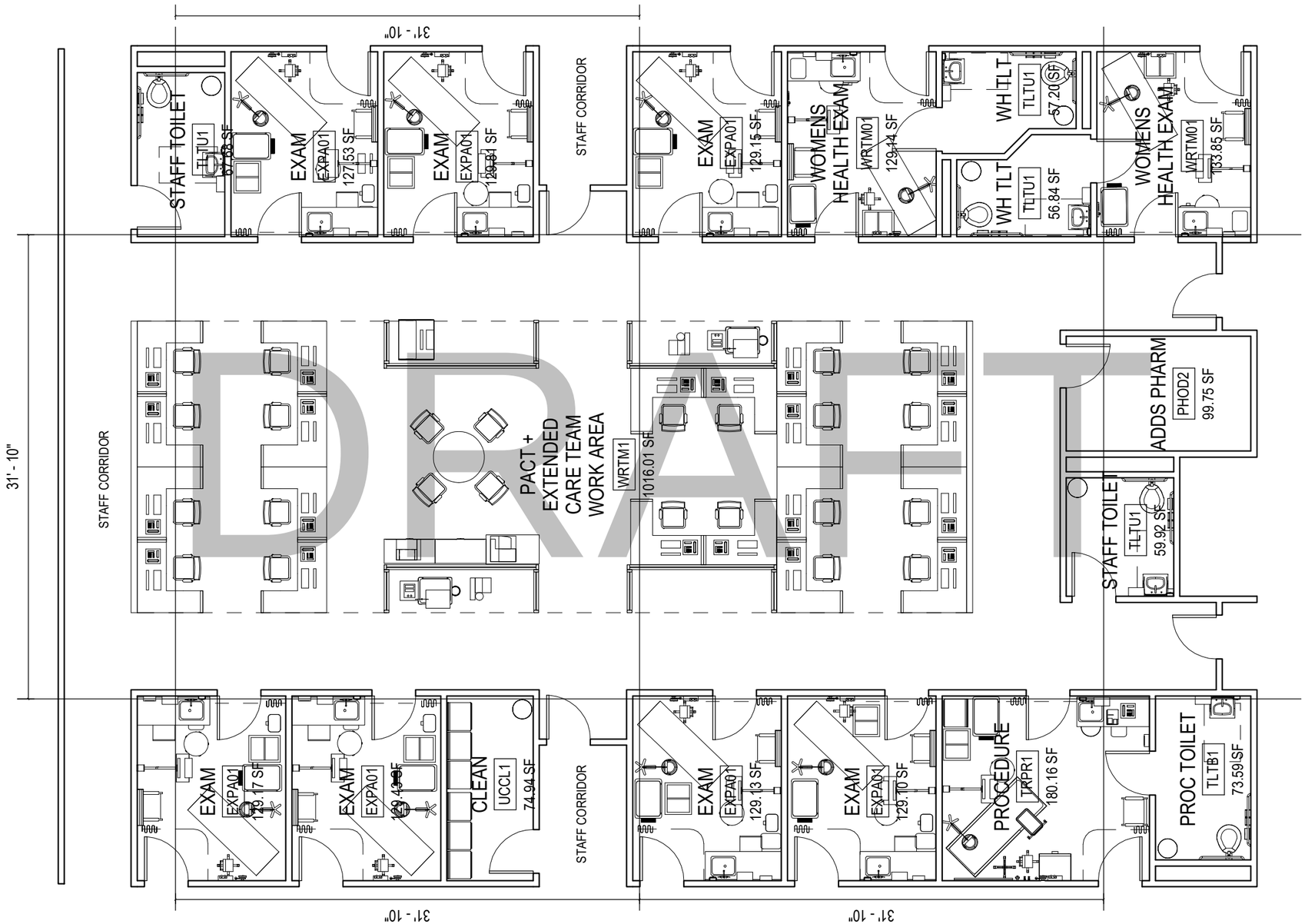

U.S. Department of Veterans Affairs

Plot Date: 9/26/2017 1:59:11 PM

CBOC, PACT ONE PROTOTYPE - PLAN

SKETCH TITLE

1/8" = 1'-0"

SCALE

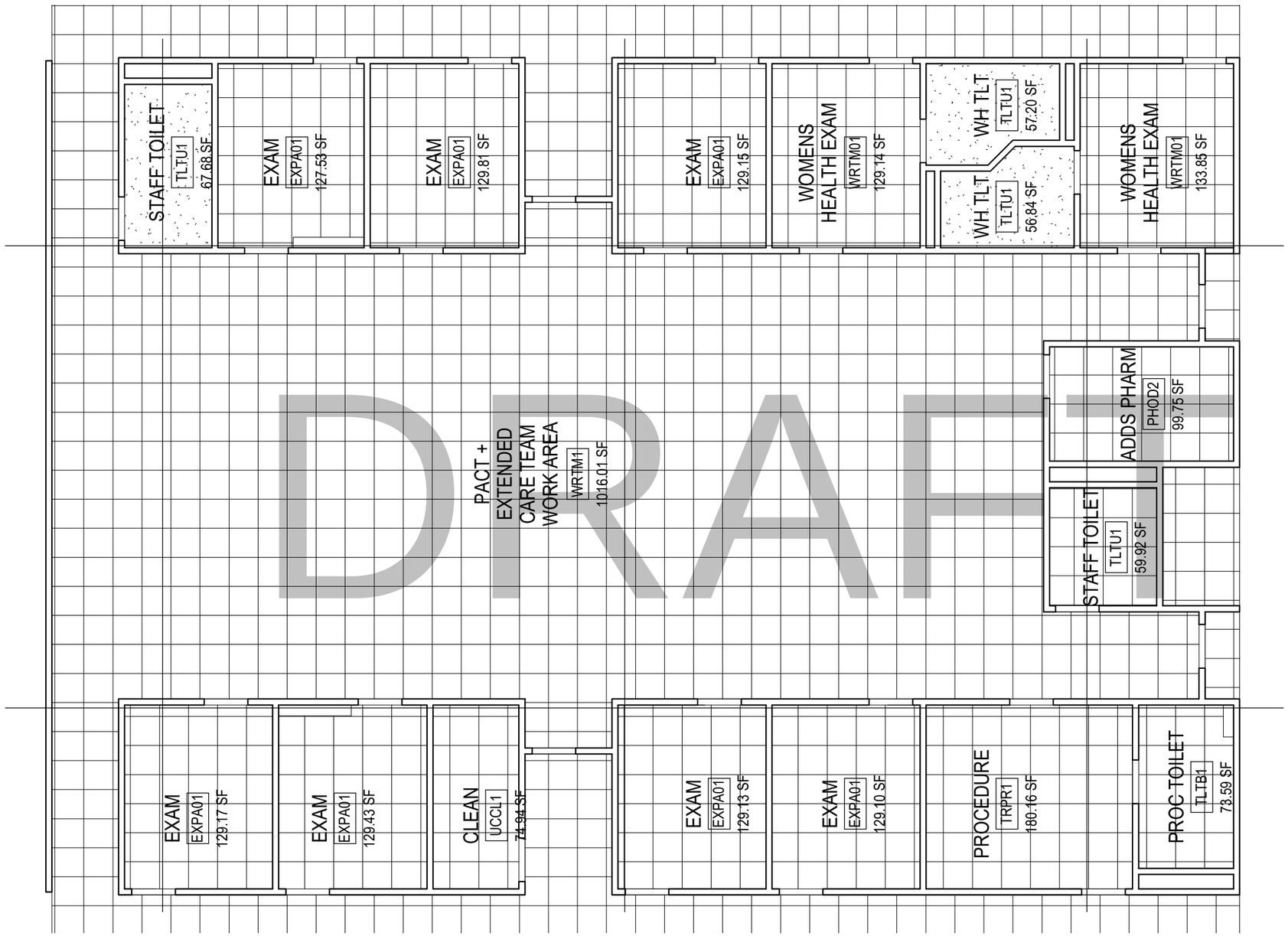

U.S. Department of Veterans Affairs

Plot Date: 9/26/2017 1:59:12 PM

CBOC, PACT ONE
PROTOTYPE - RCP

SKETCH TITLE

1/8" = 1'-0"

SCALE

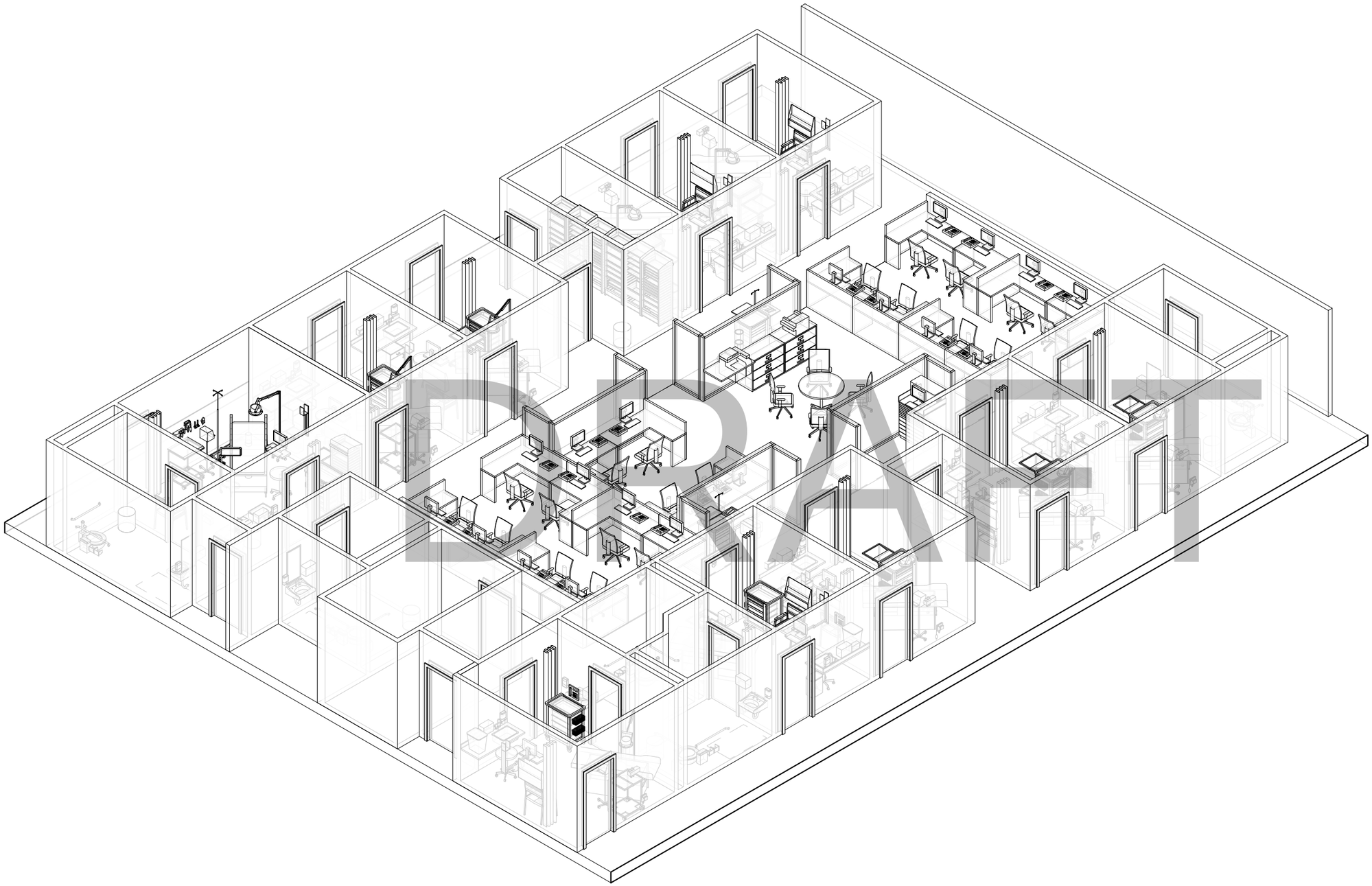

U.S. Department of Veterans Affairs

Plot Date: 9/26/2017 1:59:16 PM

CBOC, PACT ONE
PROTOTYPE - AXON

SKETCH TITLE

SCALE

U.S. Department of Veterans Affairs

CBOC, BMER1, BIOMEDICAL ENGINEERING REPAIR SHOP - PLAN

Plot Date: 9/26/2017 1:44:09 PM

SKETCH TITLE

1/4" = 1'-0"

SCALE

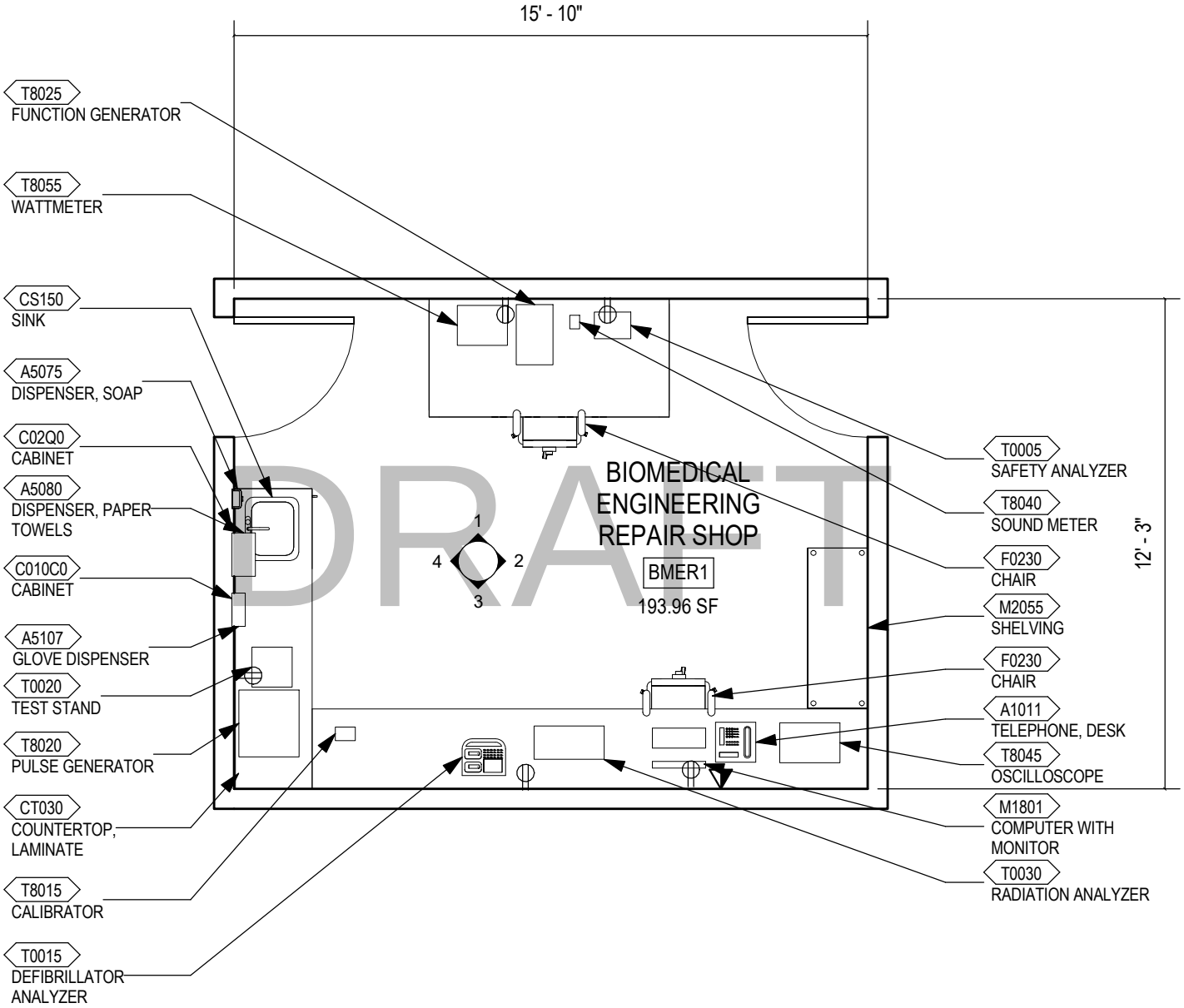

U.S. Department of Veterans Affairs

CBOC, BMER1, BIOMEDICAL ENGINEERING REPAIR SHOP - RCP

SKETCH TITLE

1/4" = 1'-0"

SCALE

Plot Date: 9/26/2017 1:44:09 PM

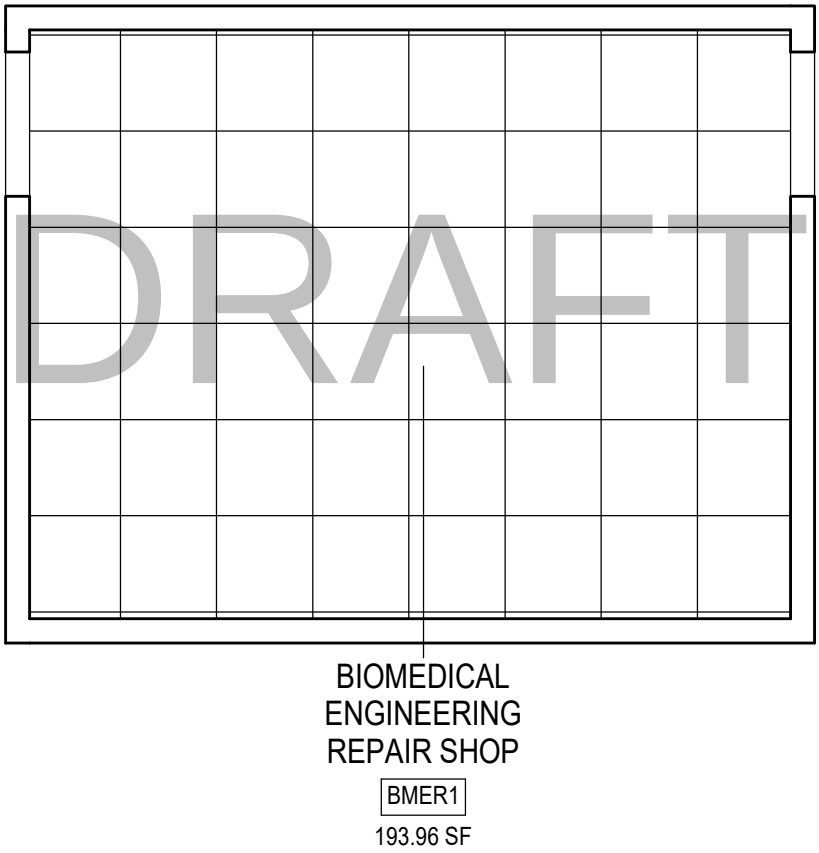

U.S. Department of Veterans Affairs

CBOC, BMER1, BIOMEDICAL ENGINEERING REPAIR SHOP - ELEVATIONS

Plot Date: 9/26/2017 1:44:10 PM

SKETCH TITLE

1/4" = 1'-0"

SCALE

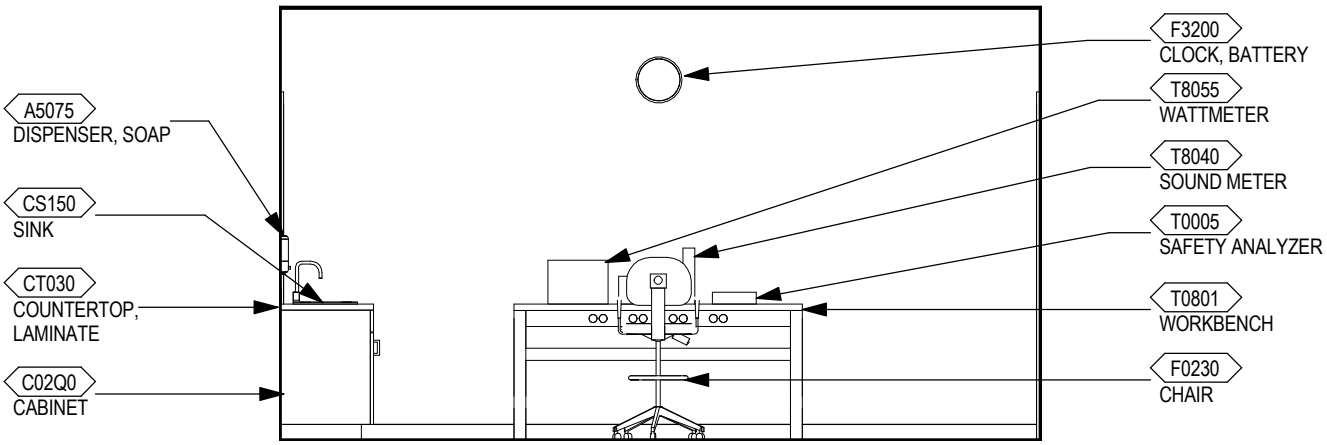

DRAFT

ELEVATION 1

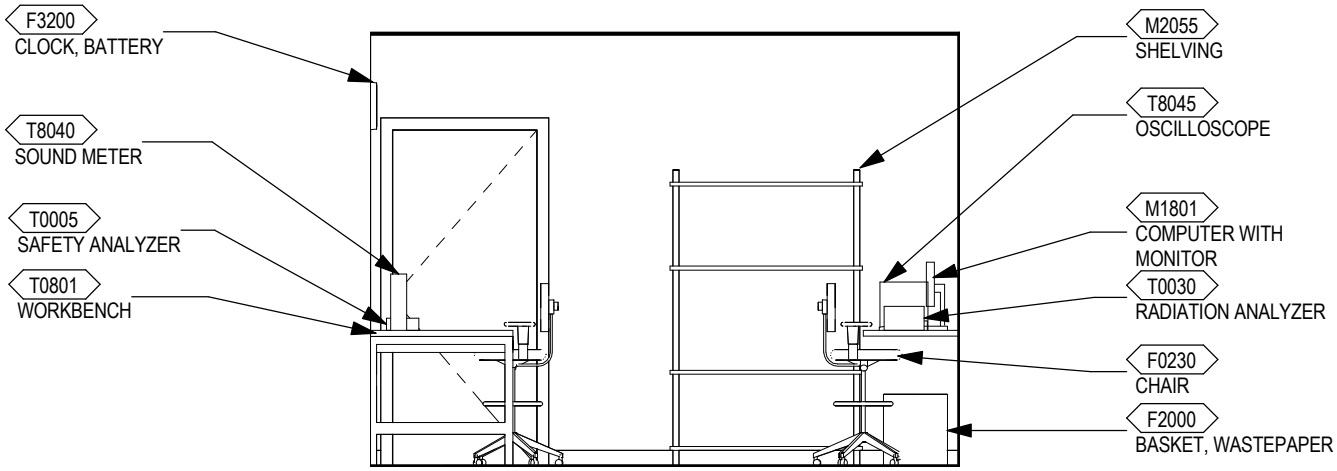

ELEVATION 2

U.S. Department of Veterans Affairs

CBOC, BMER1, BIOMEDICAL ENGINEERING REPAIR SHOP - ELEVATIONS

Plot Date: 9/26/2017 1:44:10 PM

SKETCH TITLE

1/4" = 1'-0"

SCALE

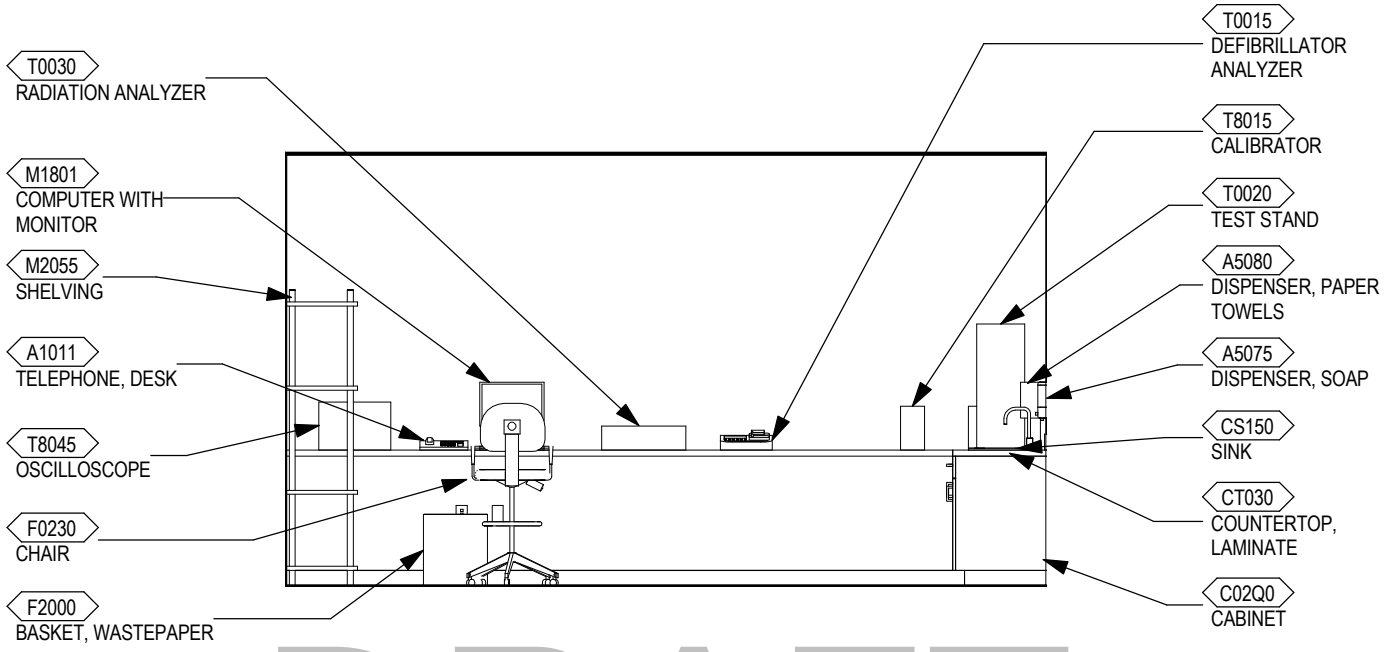

ELEVATION 3

DRAFT

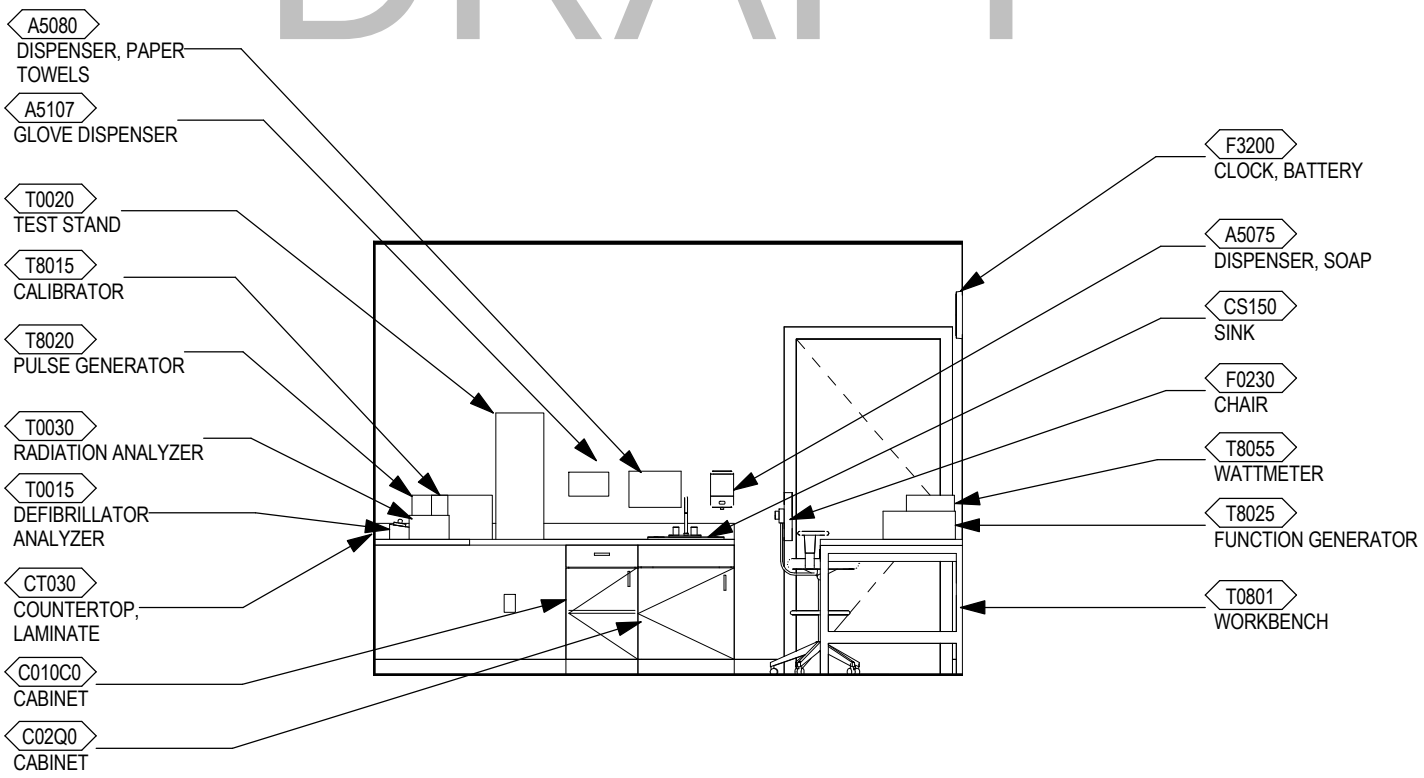

ELEVATION 4

U.S. Department of Veterans Affairs

CBOC, BMER1, BIOMEDICAL ENGINEERING REPAIR SHOP - AXON

SKETCH TITLE

Plot Date: 9/26/2017 1:44:11 PM

SCALE

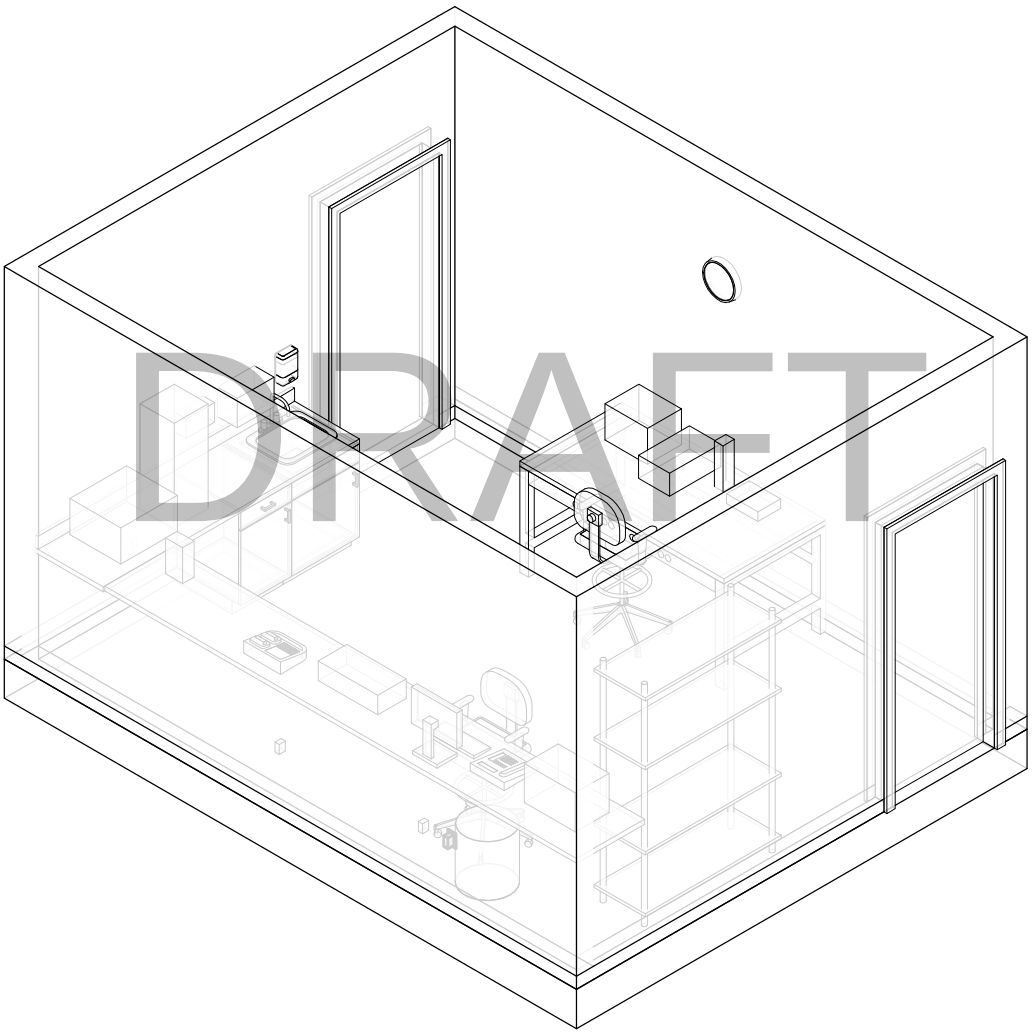

CBOC, BMER1, BIOMEDICAL ENGINEERING REPAIR SHOP - EQUIPMENT LIST

SKETCH TITLE

Plot Date: 9/26/2017 1:44:12 PM

U.S. Department of Veterans Affairs

SCALE

BMER1, EQUIPMENT LIST		
JSN	EQUIPMENT NAME	Count
CS150	SINK	1
CT030	COUNTERTOP, LAMINATE	2
F0230	CHAIR	2
M1801	COMPUTER WITH MONITOR	1
M2055	SHELVING	1
T0005	SAFETY ANALYZER	1
T0020	TEST STAND	1
T0030	RADIATION ANALYZER	1
T8015	CALIBRATOR	1
T8020	PULSE GENERATOR	1
T8025	FUNCTION GENERATOR	1
T8040	SOUND METER	1
T8045	OSCILLOSCOPE	1
T8055	WATTMETER	1

DRAFT

U.S. Department of Veterans Affairs

CBOC, CRA01, CONFERENCE ROOM - PLAN

SKETCH TITLE

1/4" = 1'-0"

SCALE

Plot Date: 9/26/2017 1:44:13 PM

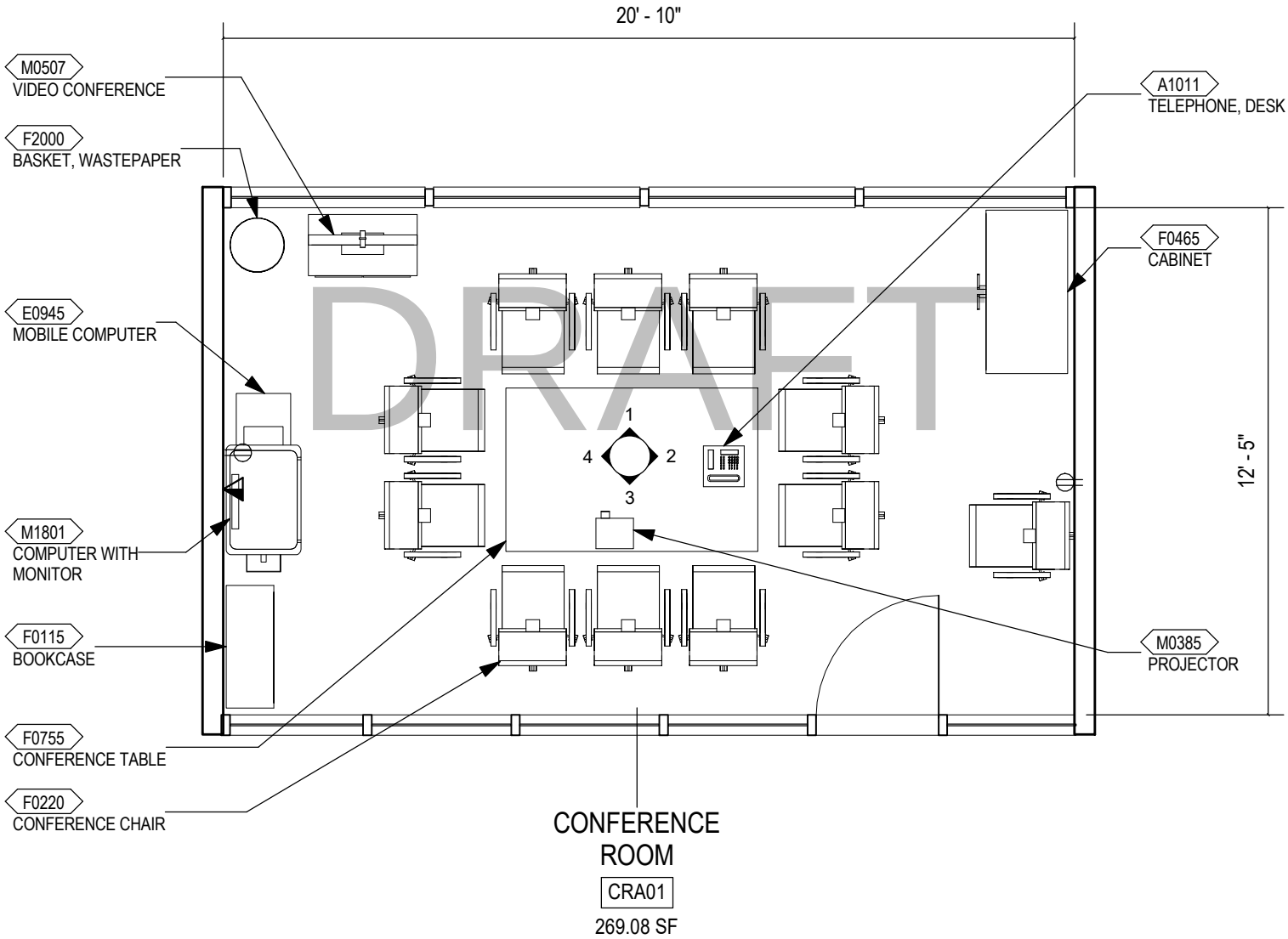

U.S. Department of Veterans Affairs

CBOC, CRA01, CONFERENCE ROOM - RCP

SKETCH TITLE

1/4" = 1'-0"

SCALE

Plot Date: 9/26/2017 1:44:13 PM

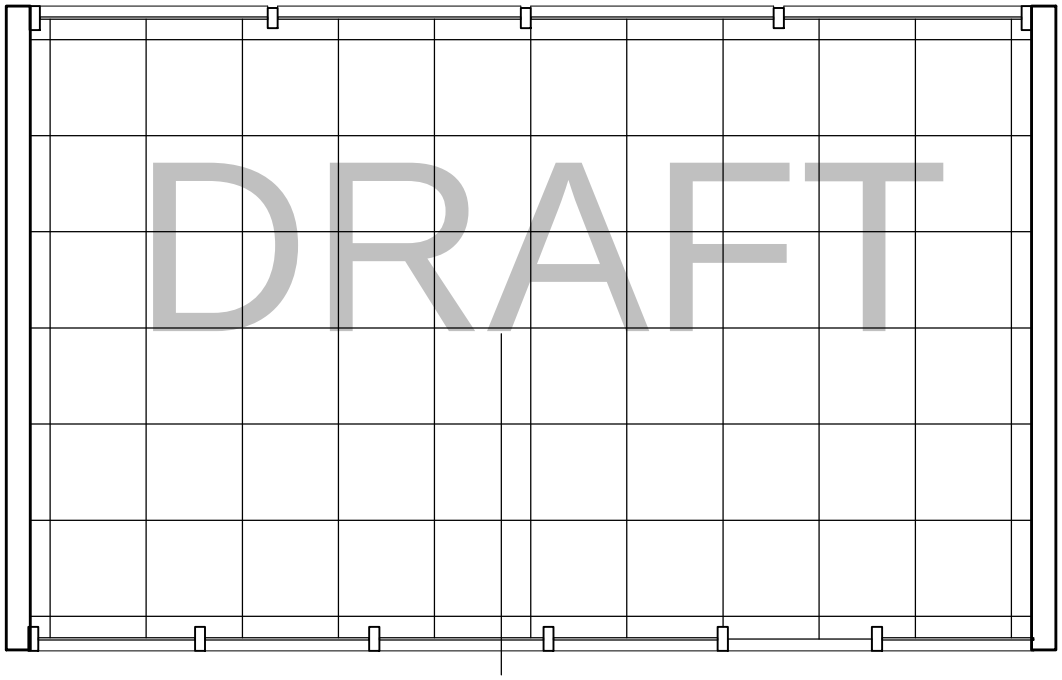

CONFERENCE ROOM

CRA01

269.08 SF

U.S. Department of Veterans Affairs

CBOC, CRA01, CONFERENCE ROOM - ELEVATIONS

Plot Date: 9/26/2017 1:44:14 PM

SKETCH TITLE

1/4" = 1'-0"

SCALE

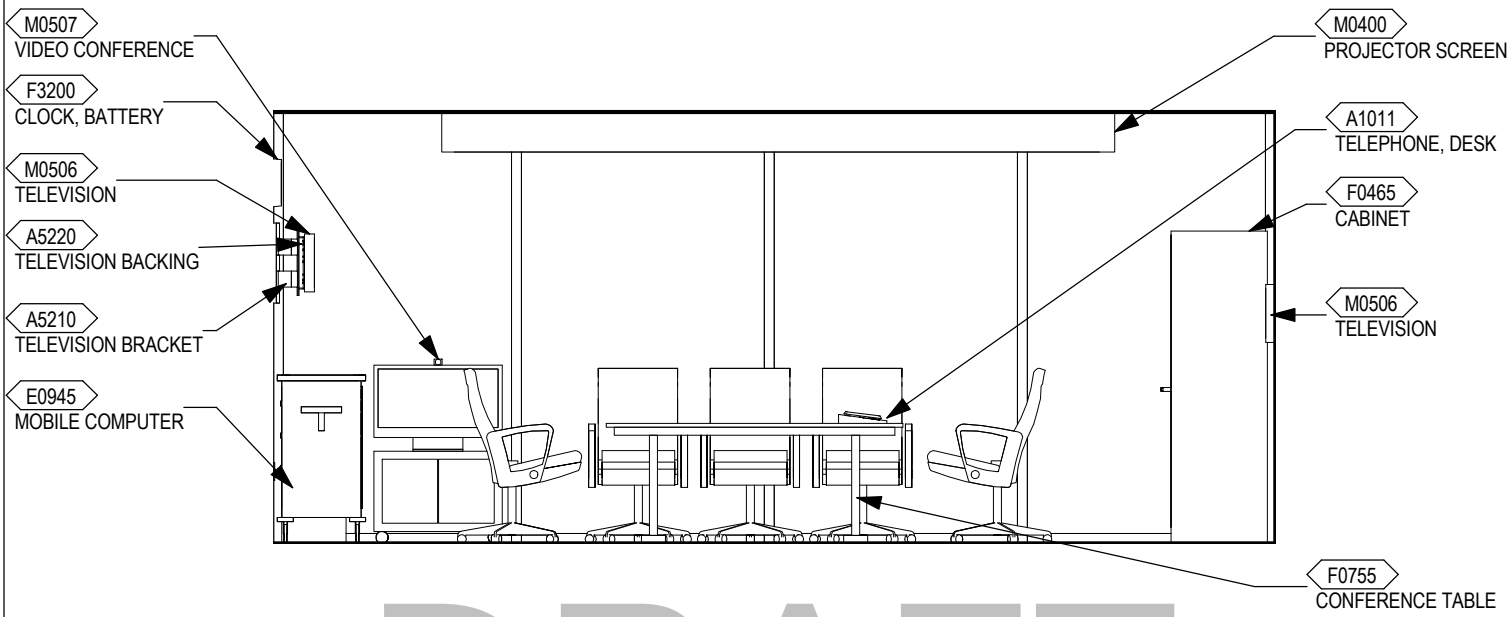

ELEVATION 1

DRAFT

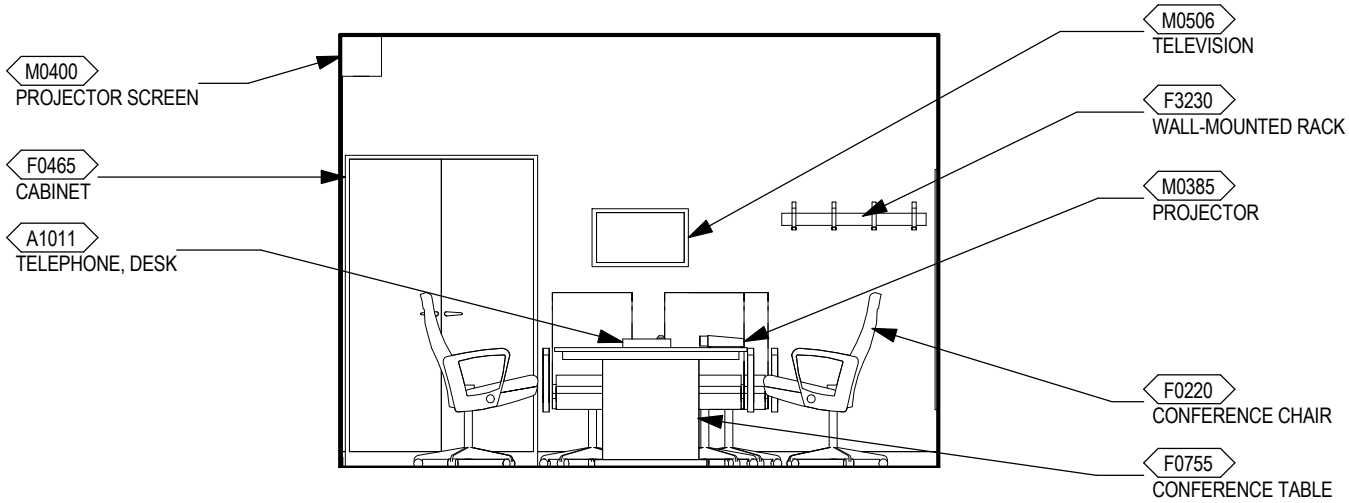

ELEVATION 2

U.S. Department of Veterans Affairs

CBOC, CRA01, CONFERENCE ROOM - ELEVATIONS

SKETCH TITLE

1/4" = 1'-0"

SCALE

Plot Date: 9/26/2017 1:44:14 PM

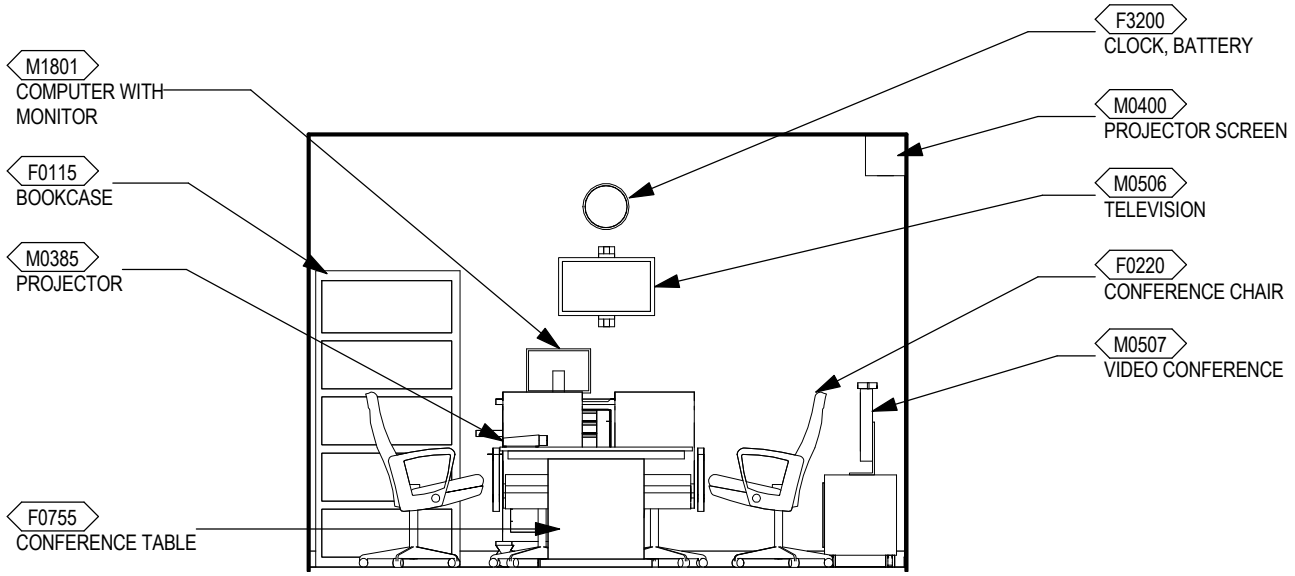

ELEVATION 3

DRAFT

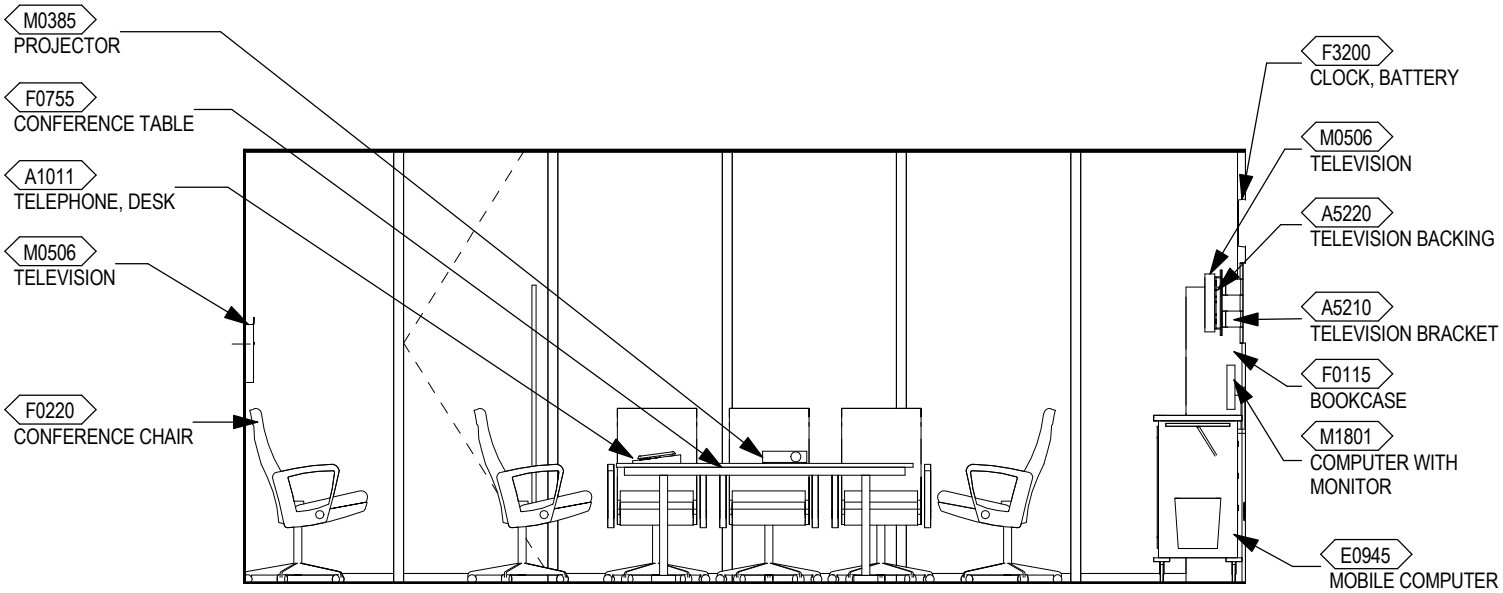

ELEVATION 4

U.S. Department of Veterans Affairs

CBOC, CRA01, CONFERENCE ROOM - AXON

SKETCH TITLE

Plot Date: 9/26/2017 1:44:15 PM

SCALE

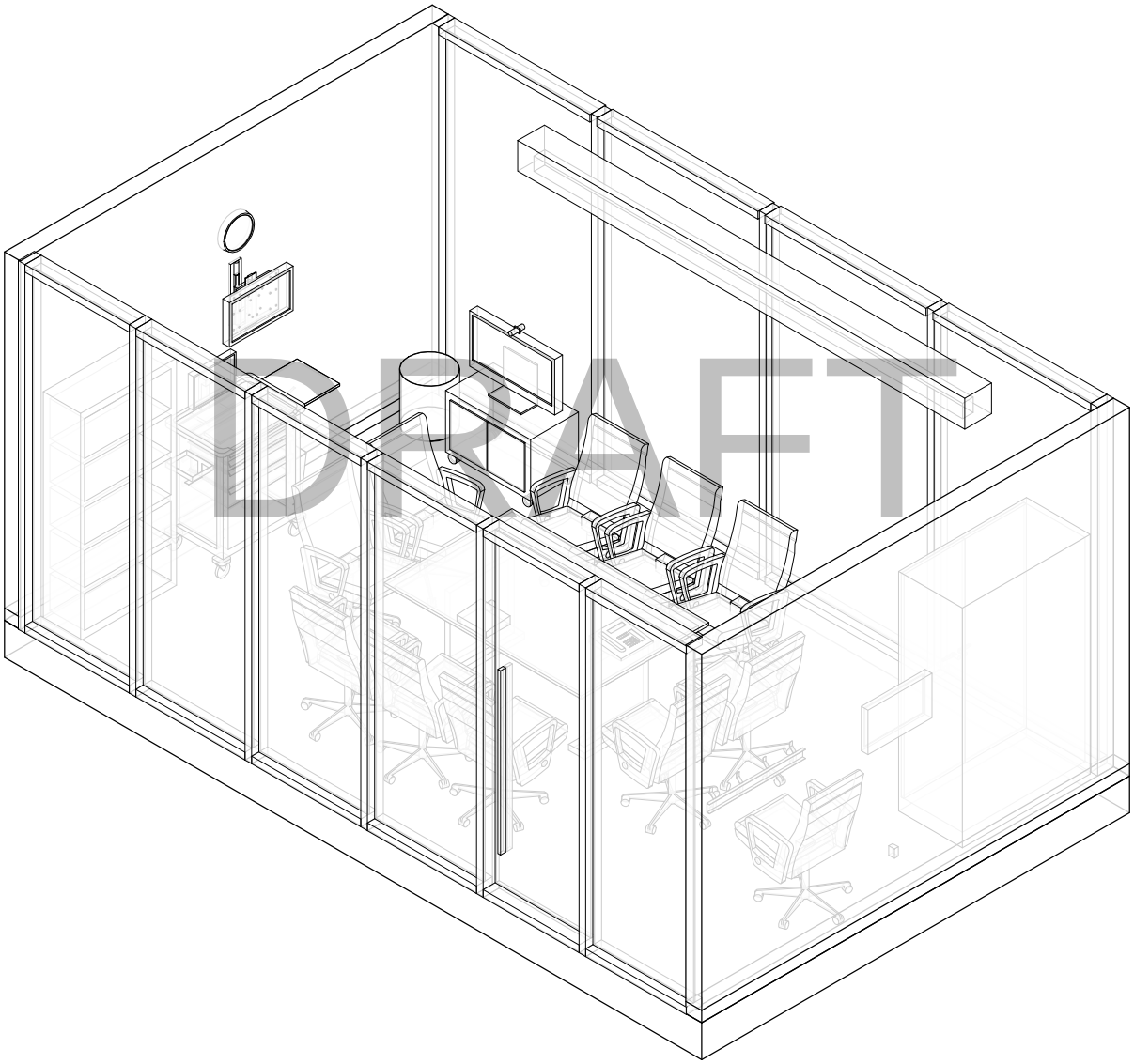

U.S. Department of Veterans Affairs

CBOC, CRA01, CONFERENCE ROOM - EQUIPMENT LIST

SKETCH TITLE

Plot Date: 9/26/2017 1:44:15 PM

SCALE

CRA01, EQUIPMENT LIST		
JSN	EQUIPMENT NAME	COUNT
A5220	TELEVISION BACKING	1
E0945	MOBILE COMPUTER	1
F0115	BOOKCASE	1
F0220	CONFERENCE CHAIR	11
F0465	CABINET	1
F0755	CONFERENCE TABLE	1
M0385	PROJECTOR	1
M0506	TELEVISION	2
M0507	VIDEO CONFERENCE	1
M1801	COMPUTER WITH MONITOR	1

DRAFT

U.S. Department of Veterans Affairs

CBOC, EXPA1, EXAM ROOM-PATIENT ALIGNED CARE TEAM - PLAN

Plot Date: 9/26/2017 1:44:16 PM

SKETCH TITLE

1/4" = 1'-0"

SCALE

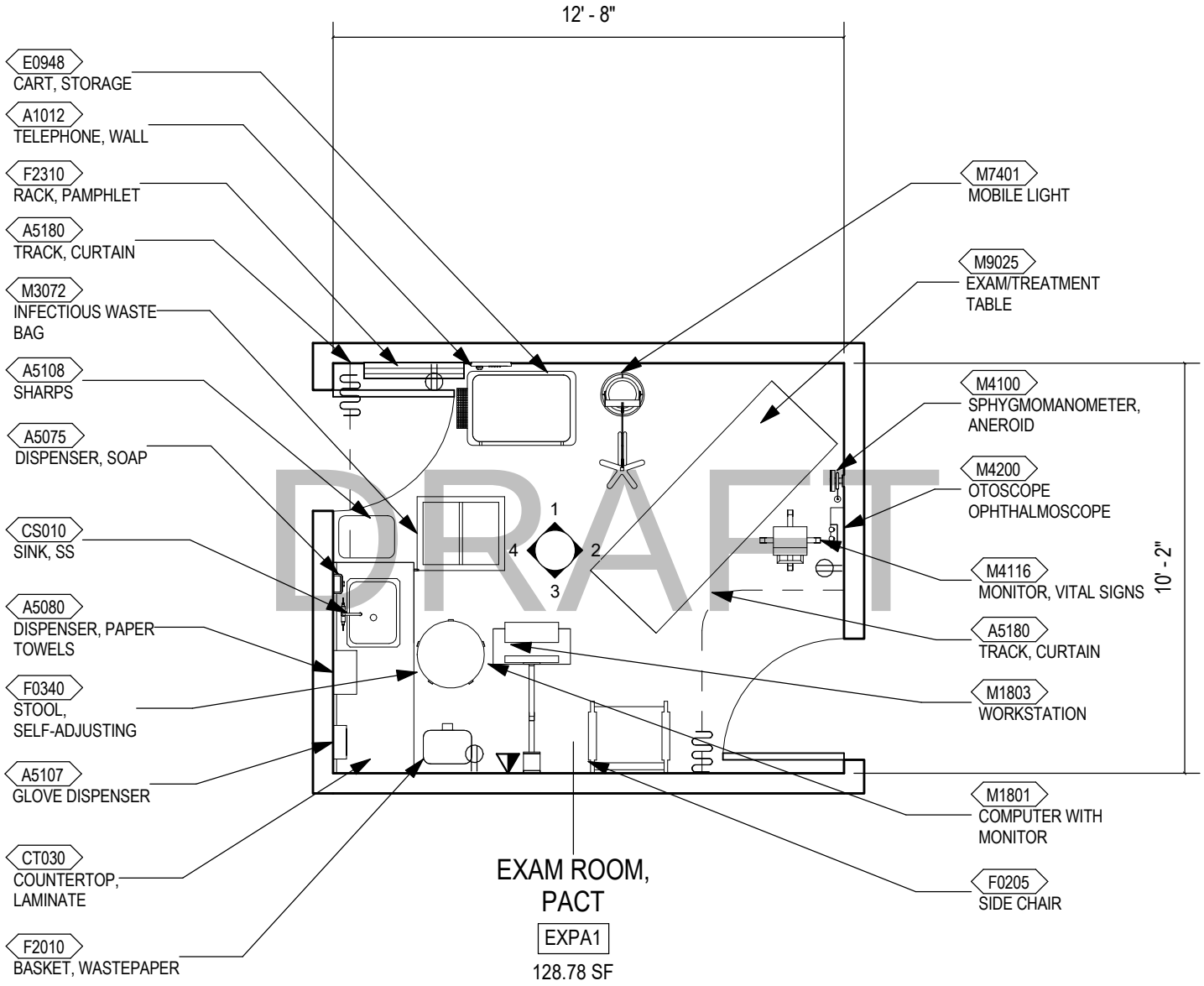

U.S. Department of Veterans Affairs

CBOC, EXPA1, EXAM ROOM - PATIENT ALIGNED CARE TEAM - RCP

SKETCH TITLE

1/4" = 1'-0"

SCALE

Plot Date: 9/26/2017 1:44:16 PM

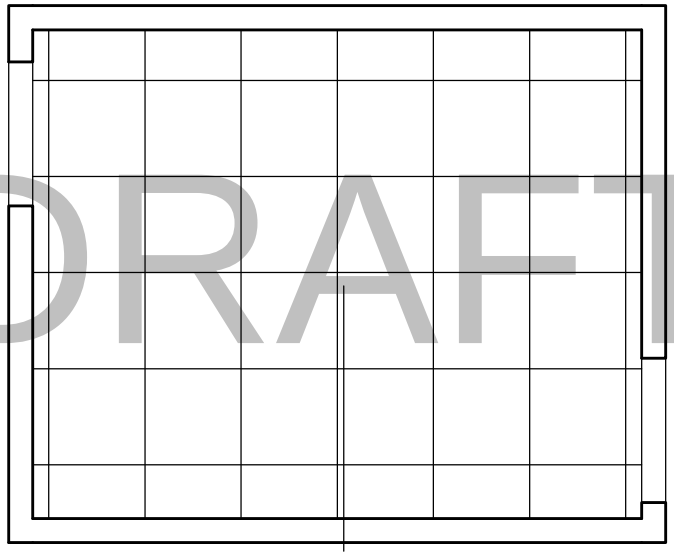

EXAM ROOM, PACT

EXPA1

128.78 SF

U.S. Department of Veterans Affairs

CBOC, EXPA1, EXAM ROOM-PATIENT ALIGNED CARE TEAM - ELEVATIONS

SKETCH TITLE

1/4" = 1'-0"

SCALE

Plot Date: 9/26/2017 1:44:17 PM

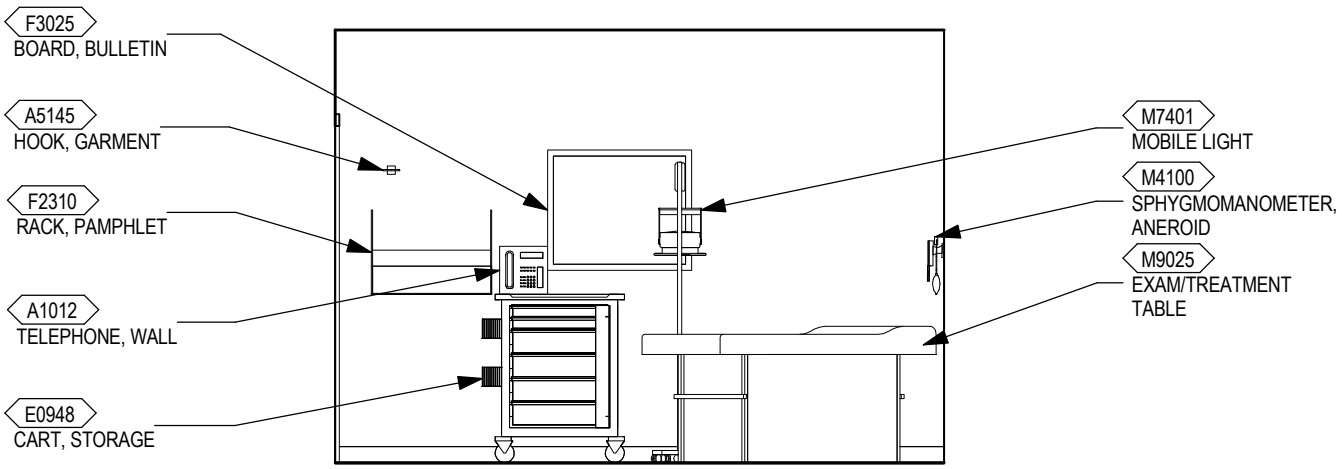

ELEVATION 1

DRAFT

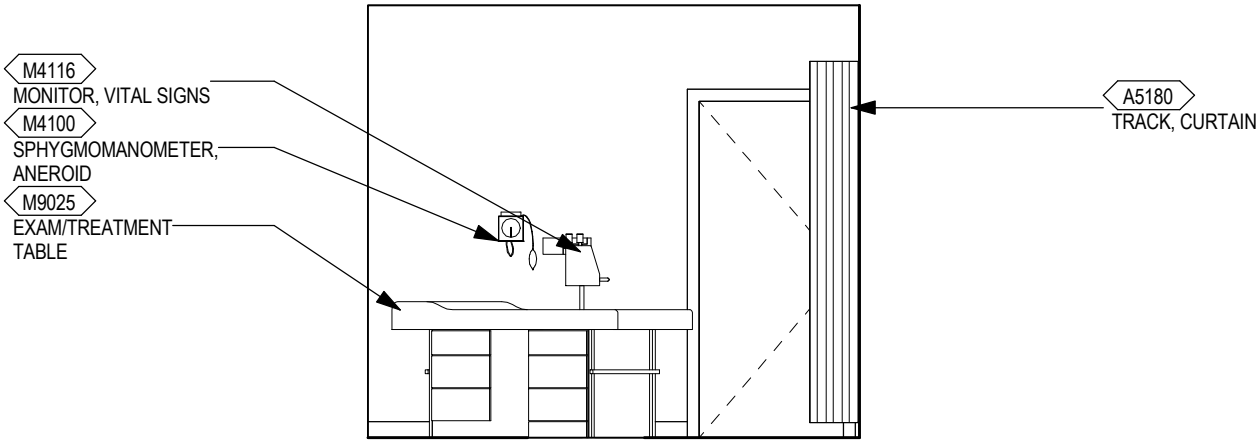

ELEVATION 2

U.S. Department of Veterans Affairs

CBOC, EXPA1, EXAM ROOM-PATIENT ALIGNED CARE TEAM - ELEVATIONS

Plot Date: 9/26/2017 1:44:18 PM

SKETCH TITLE

1/4" = 1'-0"

SCALE

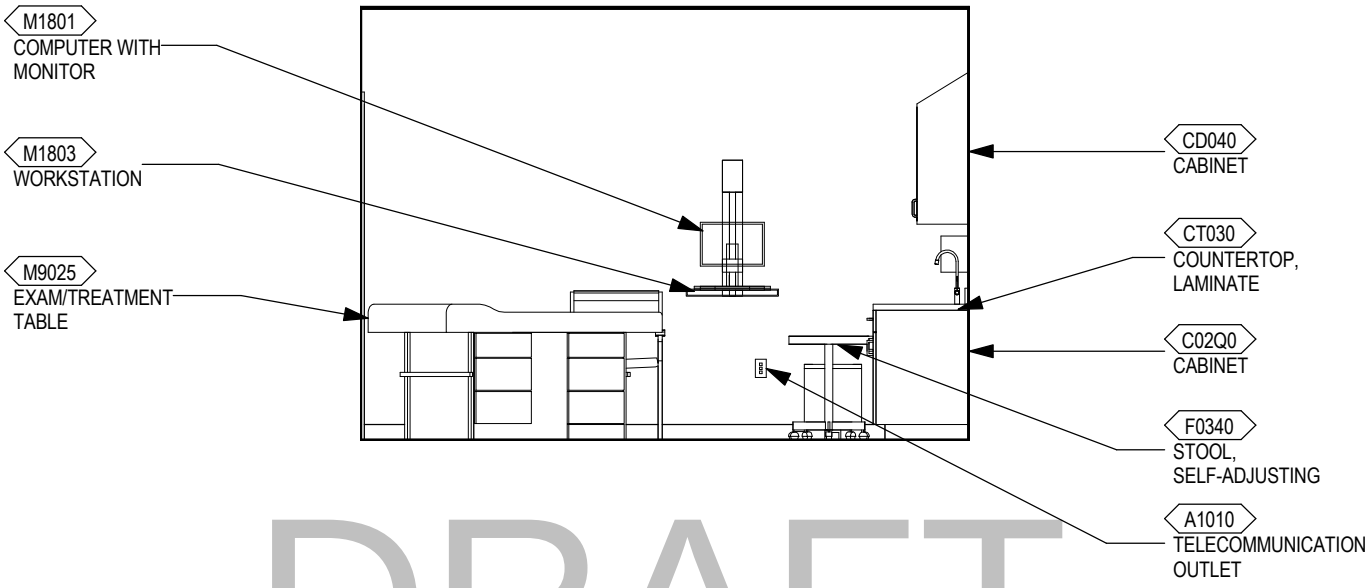

ELEVATION 3

DRAFT

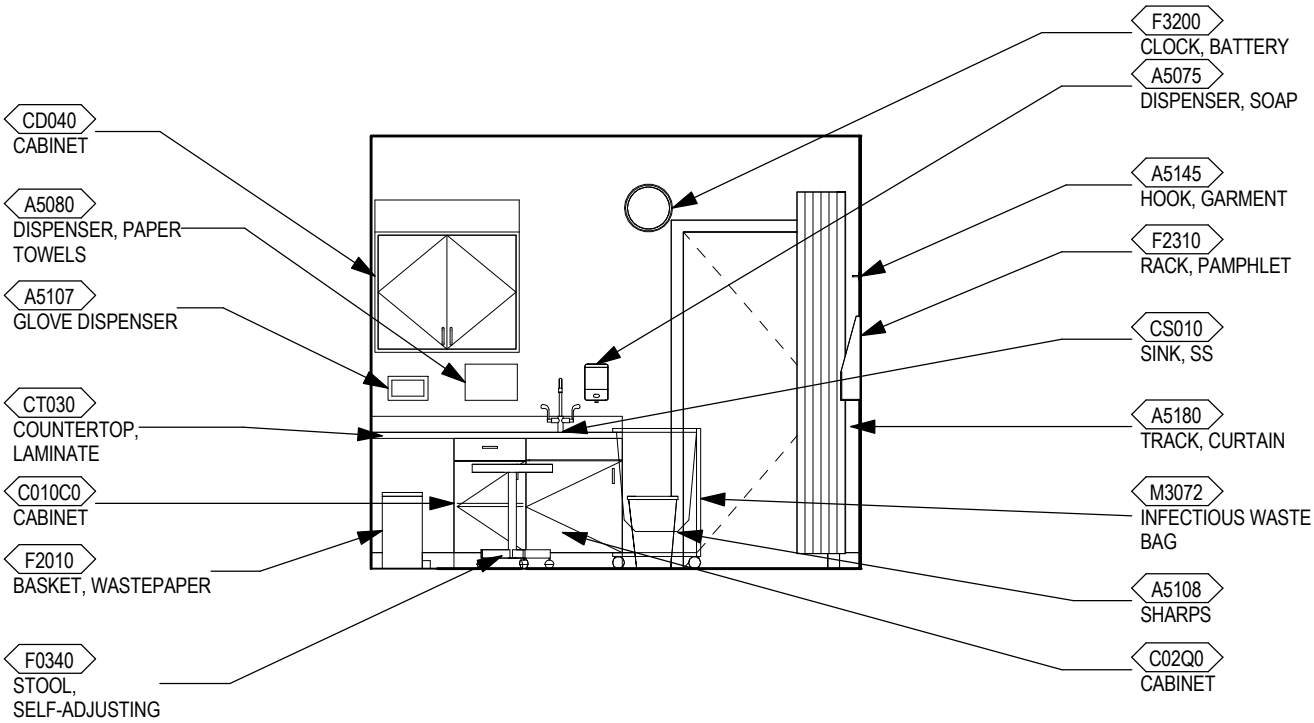

ELEVATION 4

U.S. Department of Veterans Affairs

CBOC, EXPA1, EXAM ROOM-PATIENT ALIGNED CARE TEAM - AXON

SKETCH TITLE

Plot Date: 9/26/2017 1:44:18 PM

SCALE

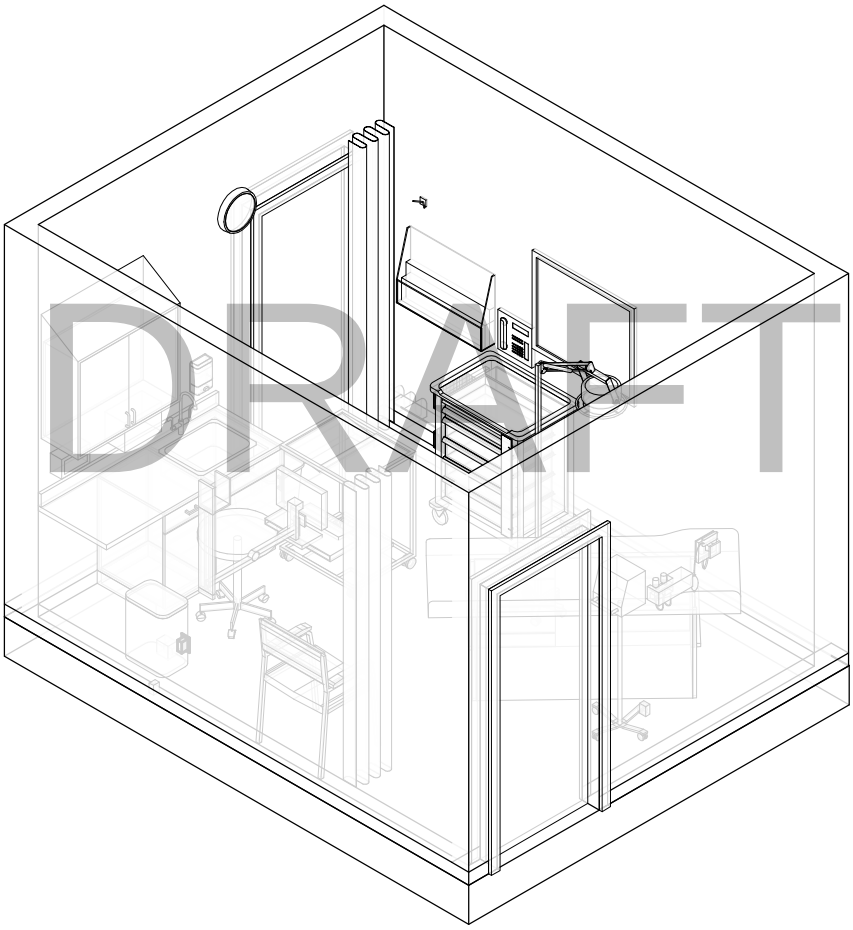

U.S. Department of Veterans Affairs

CBOC, EXPA1, EXAM ROOM-PATIENT ALIGNED CARE TEAM - EQUIPMENT LIST

SKETCH TITLE

Plot Date: 9/26/2017 1:44:19 PM

SCALE

EXPA1, EQUIPMENT LIST		
JSN	EQUIPMENT NAME	Count
A5108	SHARPS	1
CS010	SINK, SS	1
CT030	COUNTERTOP, LAMINATE	1
E0948	CART, STORAGE	1
F0205	SIDE CHAIR	1
F0340	STOOL, SELF-ADJUSTING	1
F2010	BASKET, WASTEPAPER	1
M1801	COMPUTER WITH MONITOR	1
M3072	INFECTIOUS WASTE BAG	1
M4116	MONITOR, VITAL SIGNS	1
M7401	MOBILE LIGHT	1
M9025	EXAM/TREATMENT TABLE	1

DRAFT

U.S. Department of Veterans Affairs

CBOC, EXW01, WOMENS HEALTH EXAM ROOM - PLAN

SKETCH TITLE

1/4" = 1'-0"

SCALE

Plot Date: 9/26/2017 1:44:19 PM

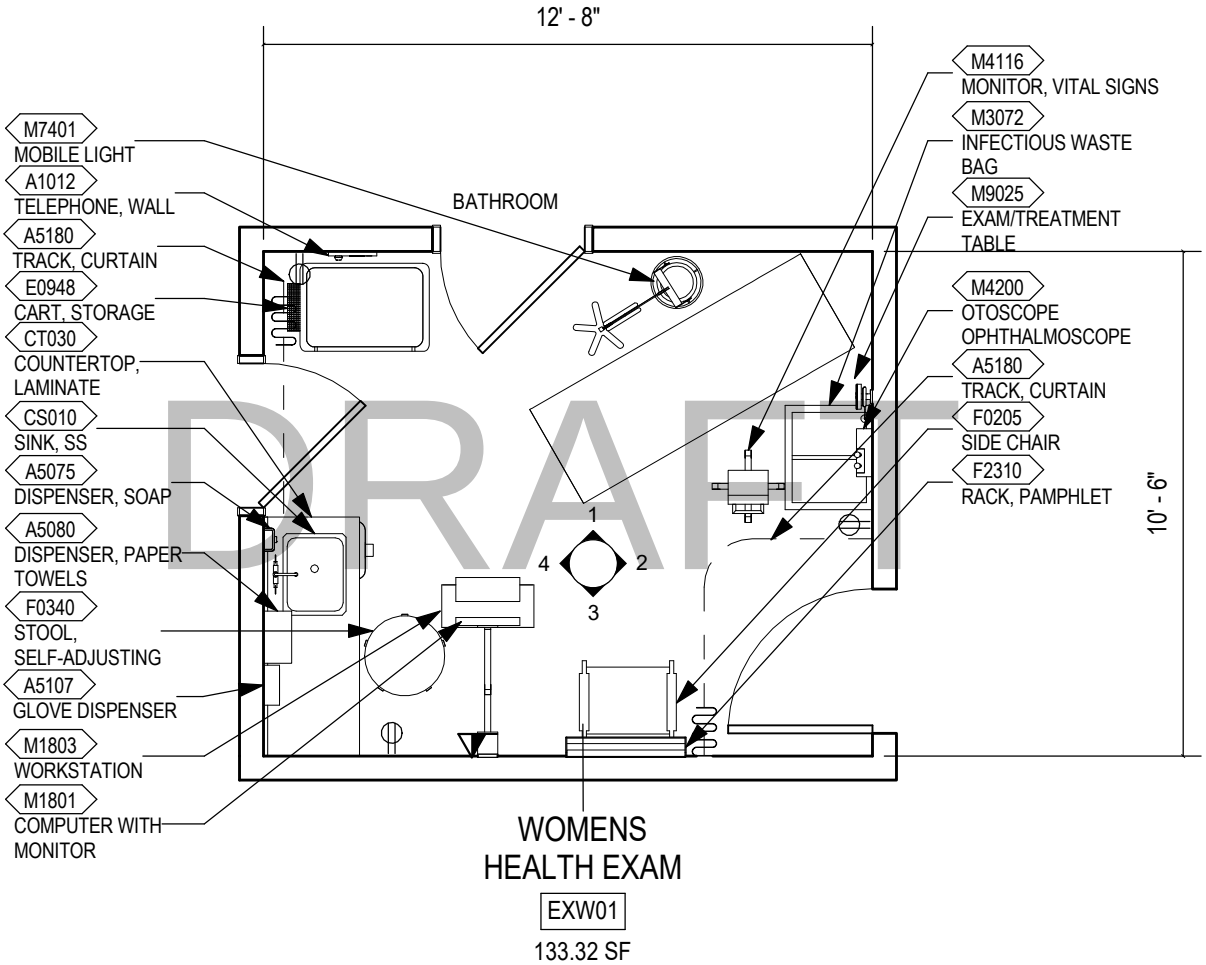

WOMENS HEALTH EXAM

EXW01

133.32 SF

U.S. Department of Veterans Affairs

CBOC, EXW01, WOMENS HEALTH EXAM ROOM - RCP

SKETCH TITLE

1/4" = 1'-0"

SCALE

Plot Date: 9/26/2017 1:44:20 PM

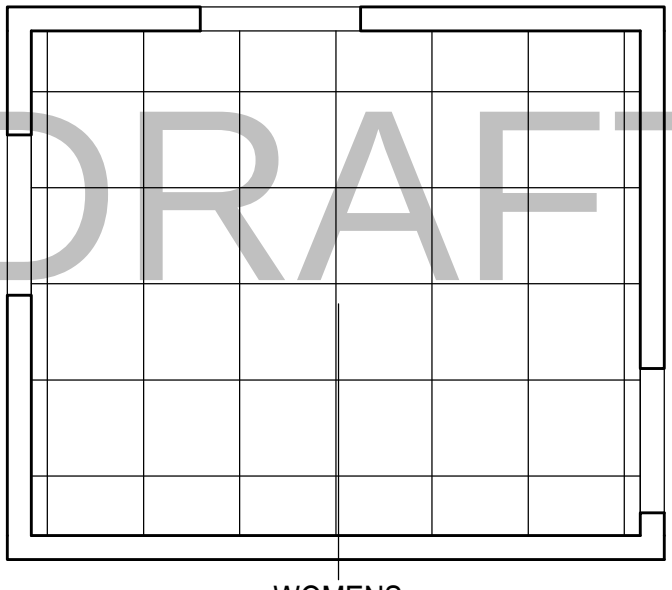

DRAFT

WOMENS
HEALTH EXAM

EXW01

133.32 SF

U.S. Department of Veterans Affairs

CBOC, EXW01, WOMENS HEALTH EXAM ROOM - ELEVATIONS

Plot Date: 9/26/2017 1:44:20 PM

SKETCH TITLE

1/4" = 1'-0"

SCALE

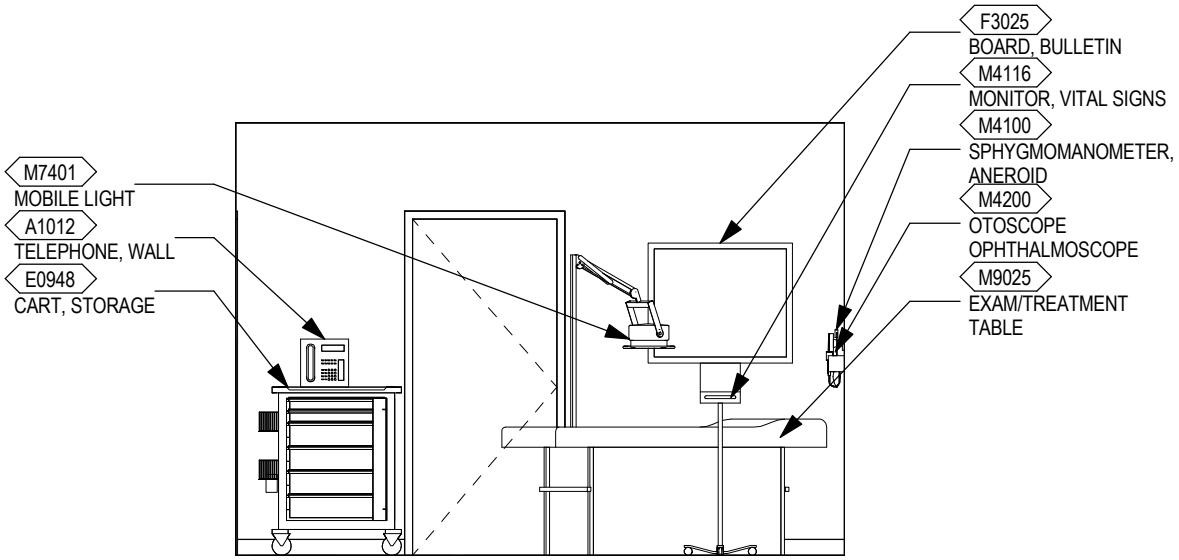

ELEVATION 1

DRAFT

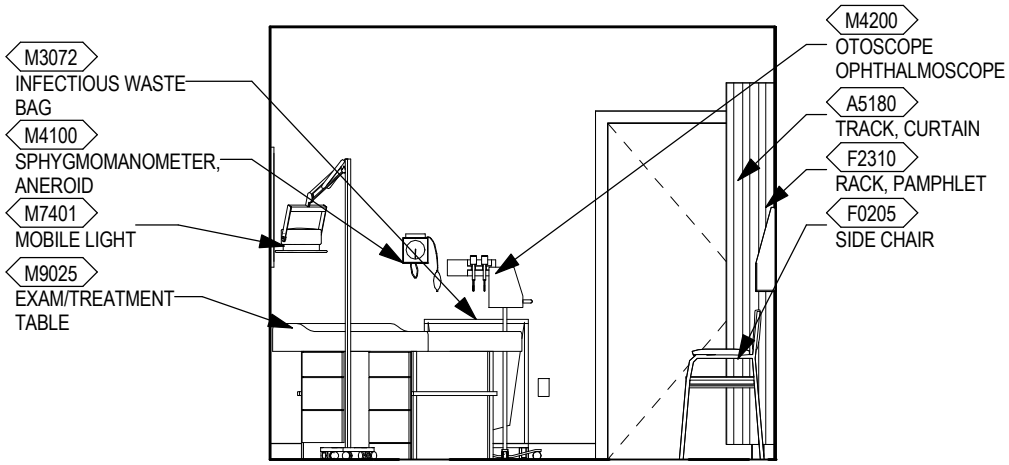

ELEVATION 2

U.S. Department of Veterans Affairs

CBOC, EXW01, WOMENS HEALTH EXAM ROOM - ELEVATIONS

SKETCH TITLE

1/4" = 1'-0"

SCALE

Plot Date: 9/26/2017 1:44:21 PM

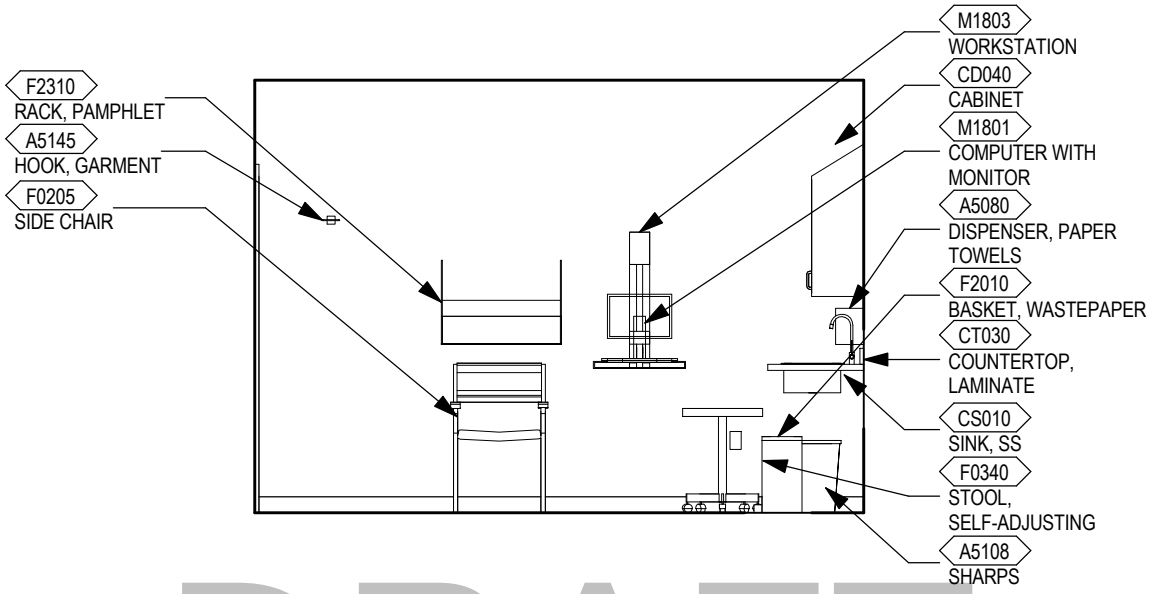

ELEVATION 3

DRAFT

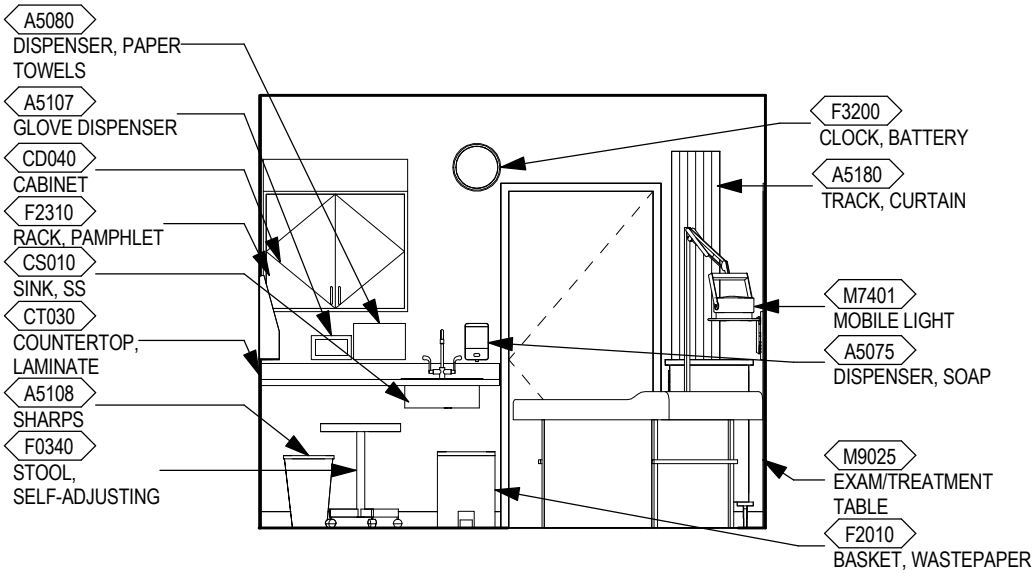

ELEVATION 4

U.S. Department of Veterans Affairs

CBOC, EXW01, WOMENS HEALTH EXAM ROOM - AXON

SKETCH TITLE

Plot Date: 9/26/2017 1:44:21 PM

SCALE

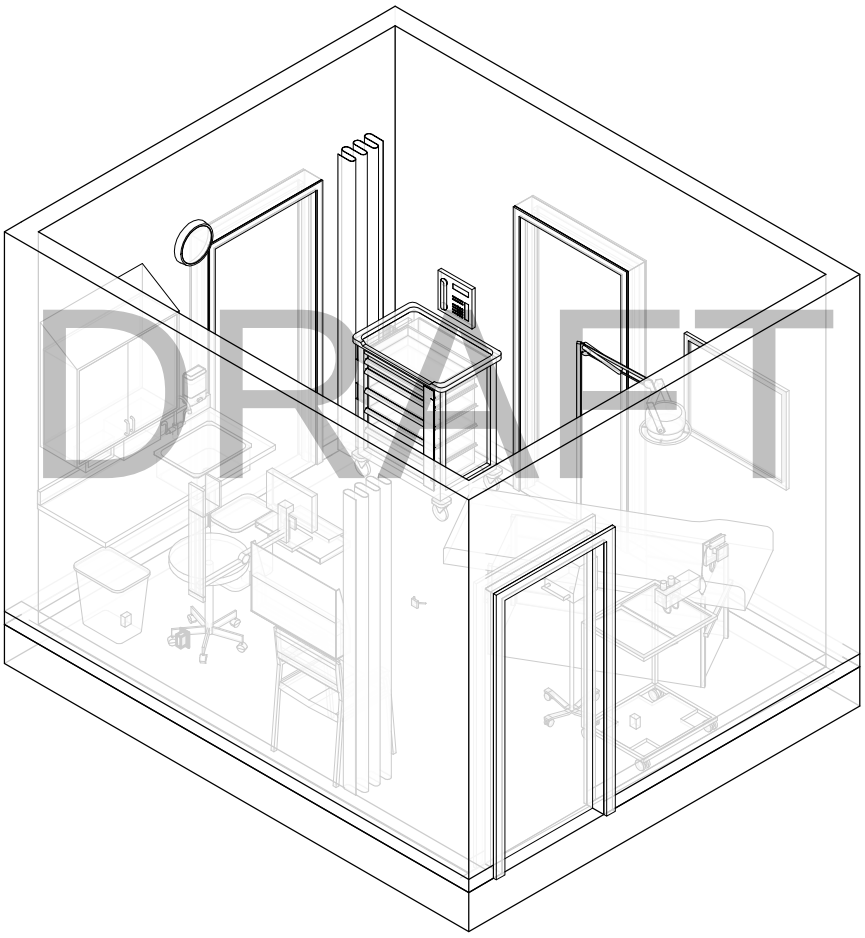

U.S. Department of Veterans Affairs

CBOC, EXW01, WOMENS HEALTH EXAM ROOM - EQUIPMENT LIST

SKETCH TITLE

Plot Date: 9/26/2017 1:44:22 PM

SCALE

EXW01, EQUIPMENT LIST		
JSN	EQUIPMENT NAME	Count
A5108	SHARPS	1
CS010	SINK, SS	1
CT030	COUNTERTOP, LAMINATE	1
E0948	CART, STORAGE	1
F0205	SIDE CHAIR	1
F0340	STOOL, SELF-ADJUSTING	1
F2010	BASKET, WASTEPAPER	1
M1801	COMPUTER WITH MONITOR	1
M3072	INFECTIOUS WASTE BAG	1
M4116	MONITOR, VITAL SIGNS	1
M7401	MOBILE LIGHT	1
M9025	EXAM/TREATMENT TABLE	1

DRAFT

U.S. Department of Veterans Affairs

CBOC, LBGM1, LABORATORY, GENERAL OUTPATIENT CLINIC - PLAN

Plot Date: 9/26/2017 1:44:23 PM

SKETCH TITLE

1/4" = 1'-0"

SCALE

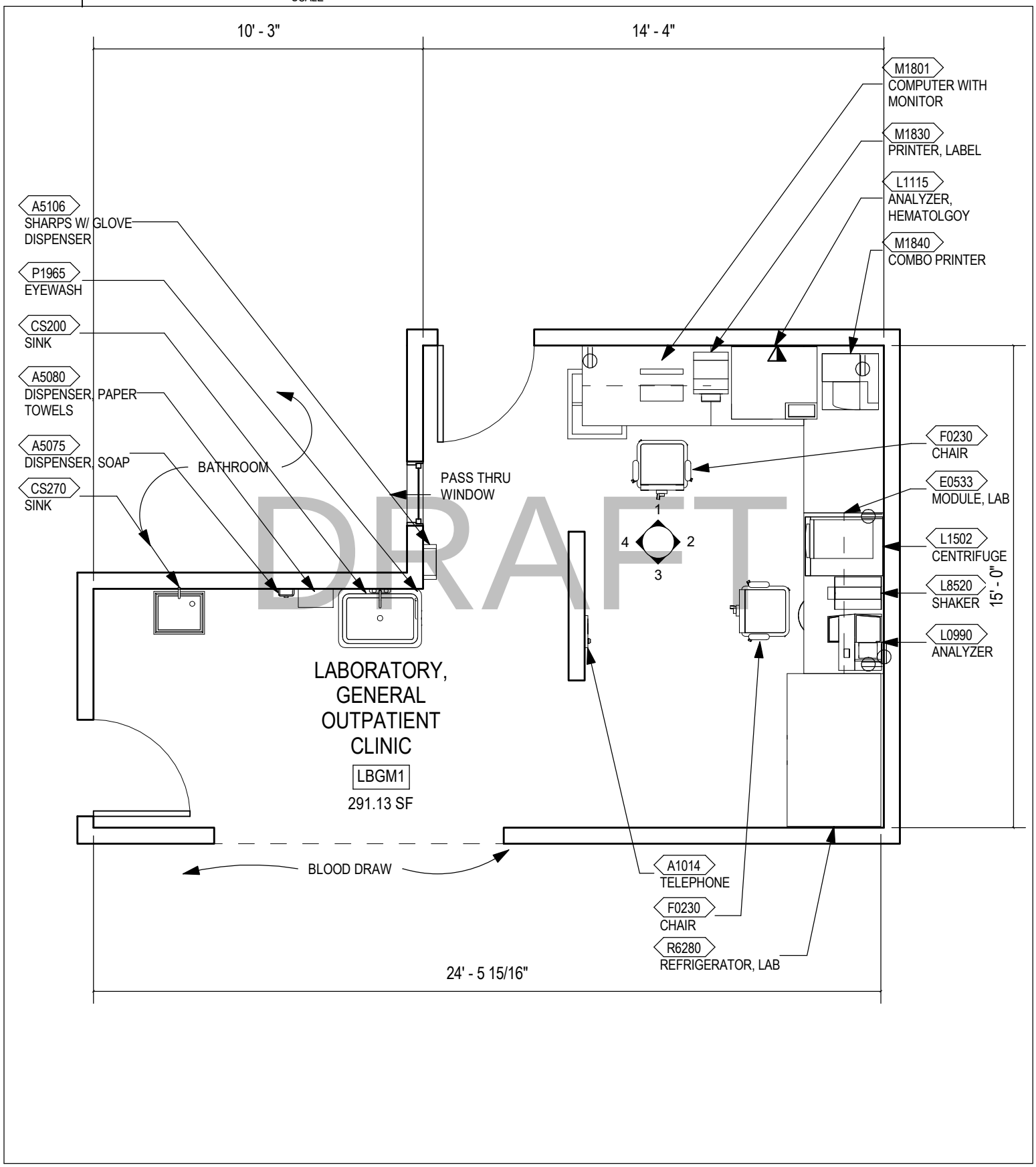

U.S. Department of Veterans Affairs

CBOC, LBGM1, LABORATORY, GENERAL OUTPATIENT CLINIC - RCP

SKETCH TITLE

1/4" = 1'-0"

SCALE

Plot Date: 9/26/2017 1:44:23 PM

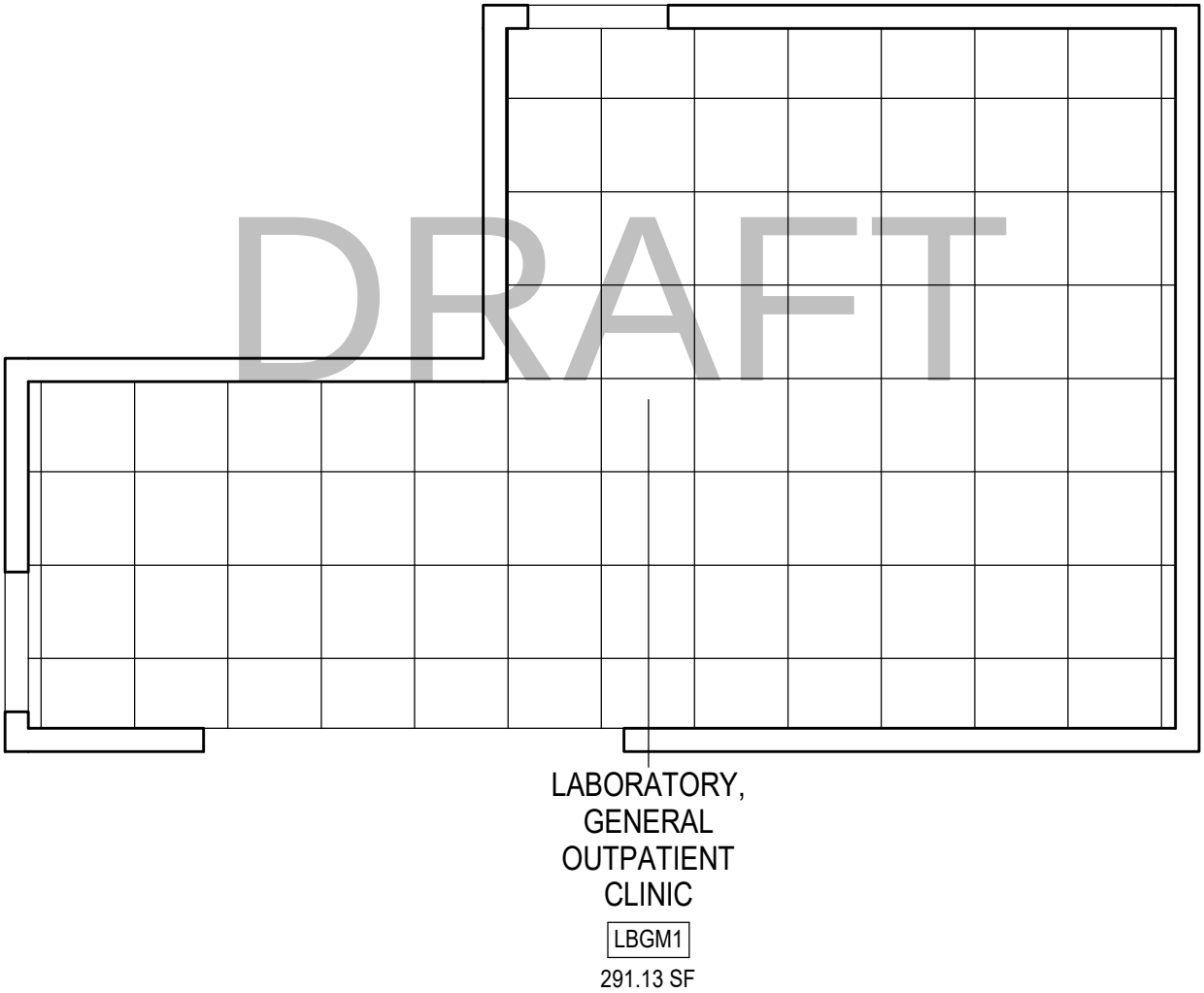

U.S. Department of Veterans Affairs

CBOC, LBGM1, LABORATORY, GENERAL OUTPATIENT CLINIC - ELEVATIONS

Plot Date: 9/26/2017 1:44:24 PM

SKETCH TITLE

1/4" = 1'-0"

SCALE

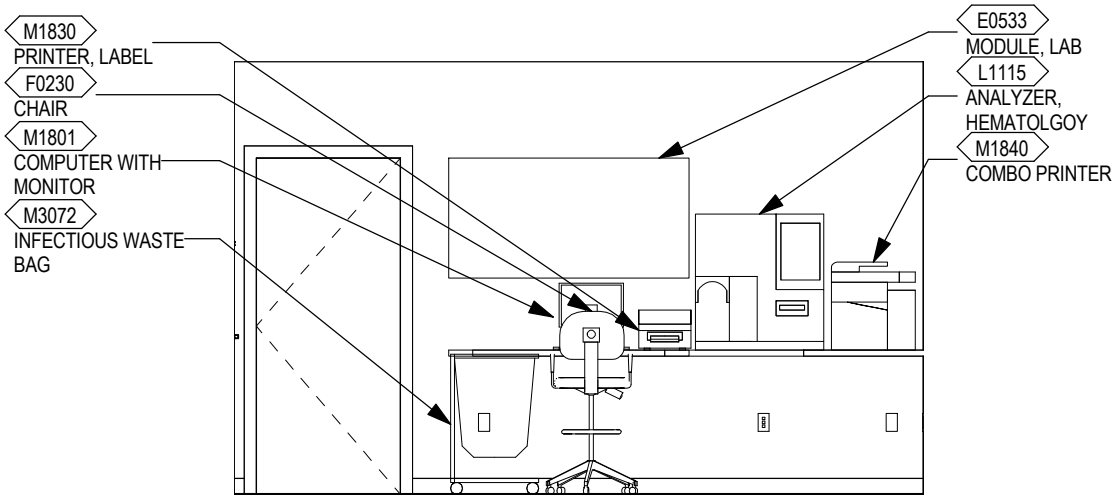

DRAFT

ELEVATION 1

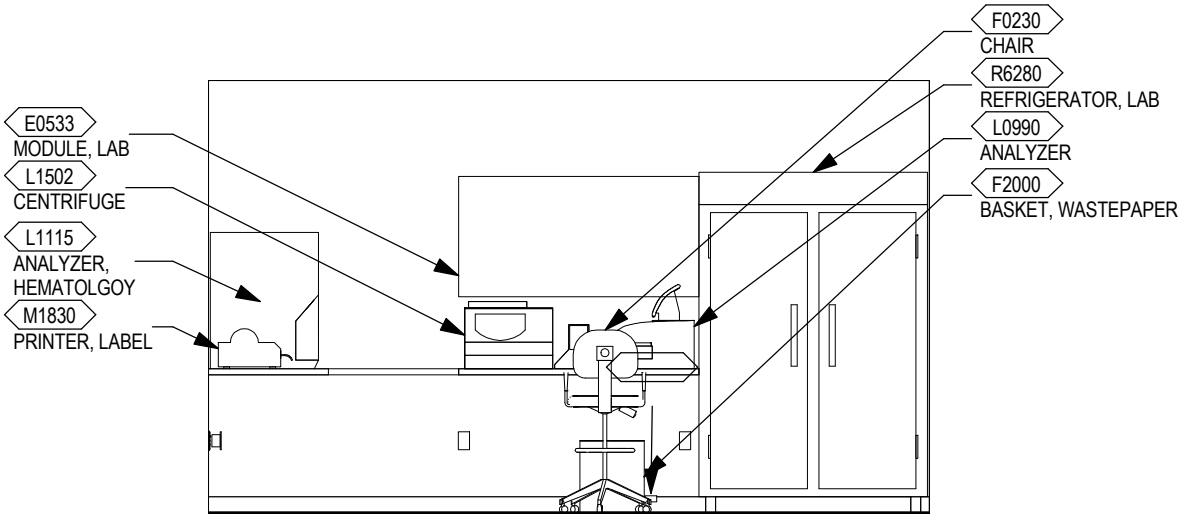

ELEVATION 2

U.S. Department of Veterans Affairs

CBOC, LBGM1, LABORATORY, GENERAL OUTPATIENT CLINIC - ELEVATIONS

Plot Date: 9/26/2017 1:44:24 PM

SKETCH TITLE

1/4" = 1'-0"

SCALE

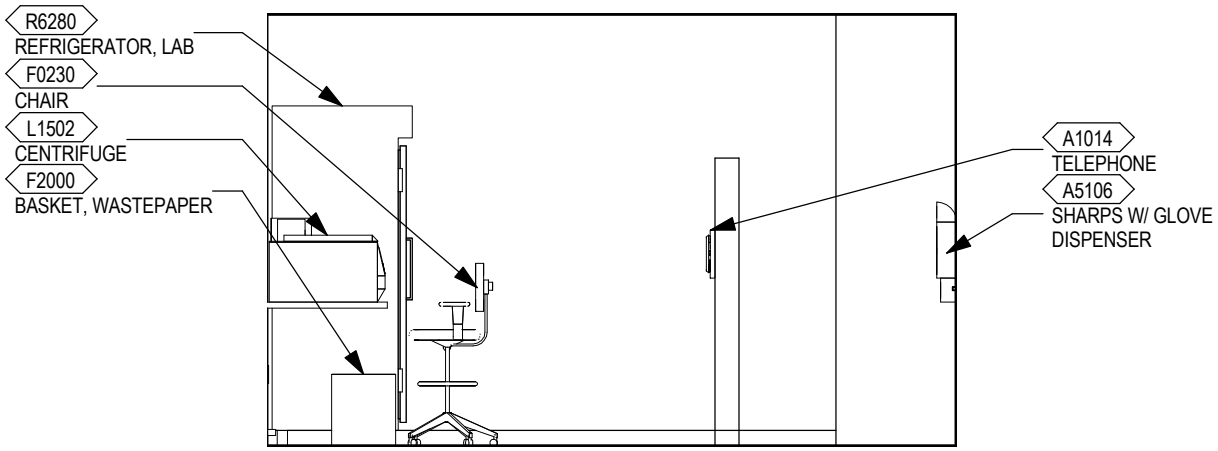

DRAFT

ELEVATION 3

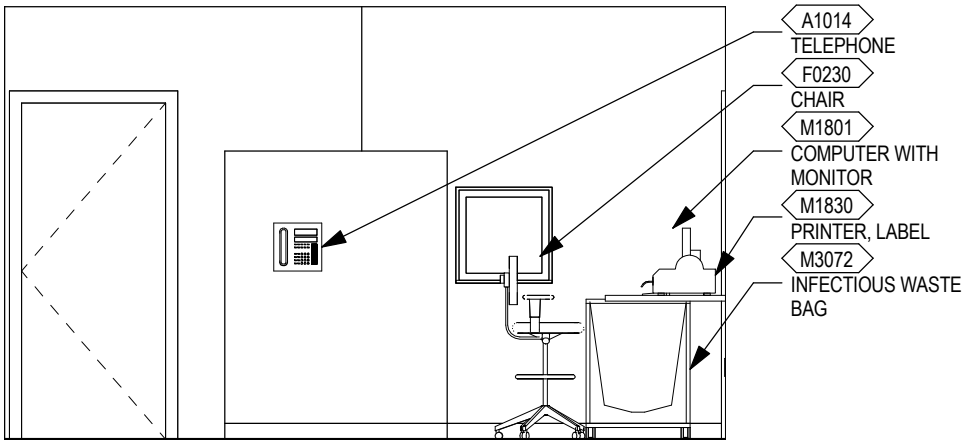

ELEVATION 4

U.S. Department of Veterans Affairs

CBOC, LBGM1, LABORATORY, GENERAL OUTPATIENT CLINIC - AXON

SKETCH TITLE

Plot Date: 9/26/2017 1:44:25 PM

SCALE

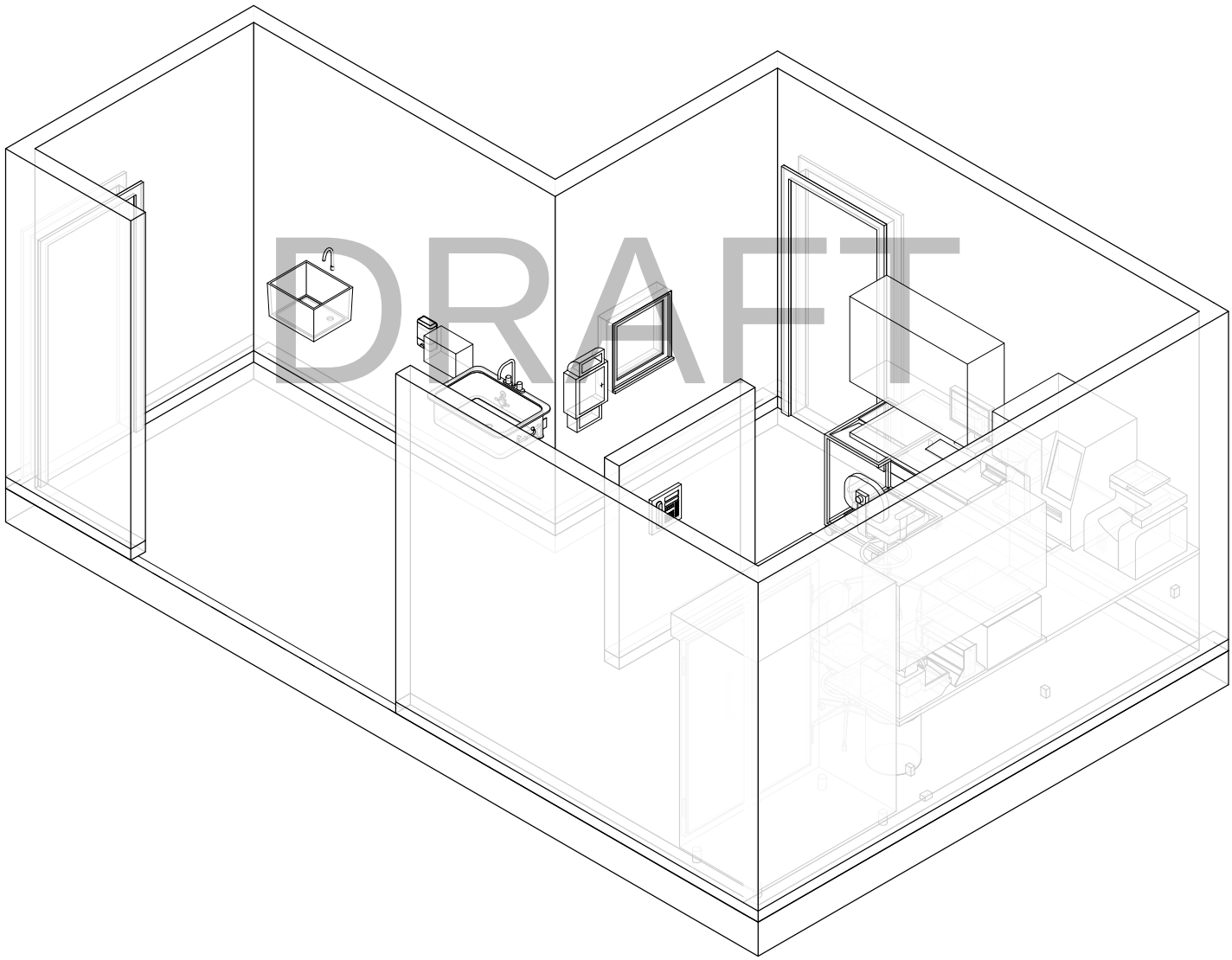

U.S. Department of Veterans Affairs

CBOC, LBGM1, LABORATORY, GENERAL OUTPATIENT CLINIC - EQUIPMENT LIST

SKETCH TITLE

Plot Date: 9/26/2017 1:44:25 PM

SCALE

LBGM1, EQUIPMENT LIST		
JSN	EQUIPMENT NAME	Count
CS200	SINK	1
CS270	SINK	1
CT030	COUNTERTOP, LAMINATE	2
F0230	CHAIR	2
L0990	ANALYZER	1
L1115	ANALYZER, HEMATOLGOY	1
L1502	CENTRIFUGE	1
L8520	SHAKER	1
M1801	COMPUTER WITH MONITOR	1
M1830	PRINTER, LABEL	1
M3072	INFECTIOUS WASTE BAG	1
P1965	EYEWASH	1
R6280	REFRIGERATOR, LAB	1

DRAFT

U.S. Department of Veterans Affairs

CBOC, LBVP1, BLOOD SPECIMEN COLLECTION ROOM - PLAN

SKETCH TITLE

1/4" = 1'-0"

SCALE

Plot Date: 9/26/2017 1:44:26 PM

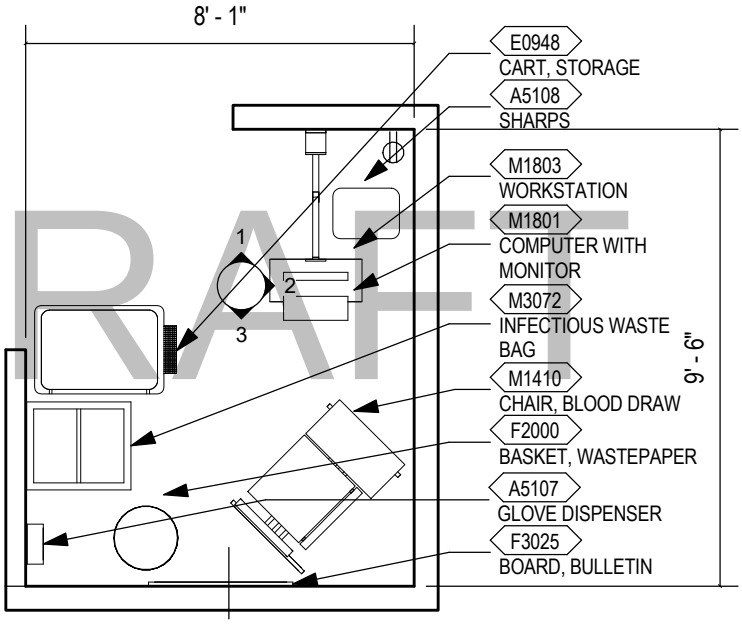

DRAFT

BLOOD SPECIMEN COLLECTION ROOM

LBVP1

78.88 SF

U.S. Department of Veterans Affairs

CBOC, LBVP1, BLOOD SPECIMEN COLLECTION ROOM - RCP

SKETCH TITLE

1/4" = 1'-0"

SCALE

Plot Date: 9/26/2017 1:44:26 PM

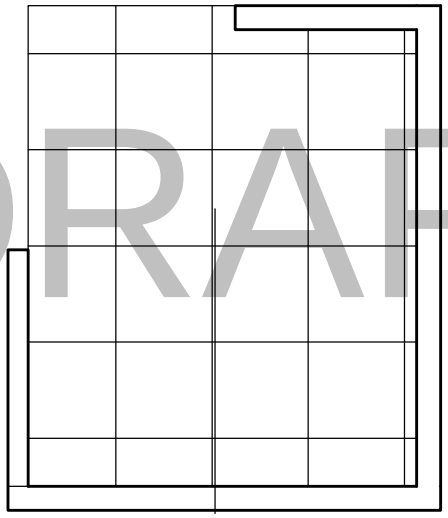

DRAFT

BLOOD SPECIMEN COLLECTION ROOM

LBVP1

78.88 SF

U.S. Department of Veterans Affairs

CBOC, LBVP1, BLOOD SPECIMEN COLLECTION ROOM - ELEVATIONS

SKETCH TITLE

1/4" = 1'-0"

SCALE

Plot Date: 9/26/2017 1:44:27 PM

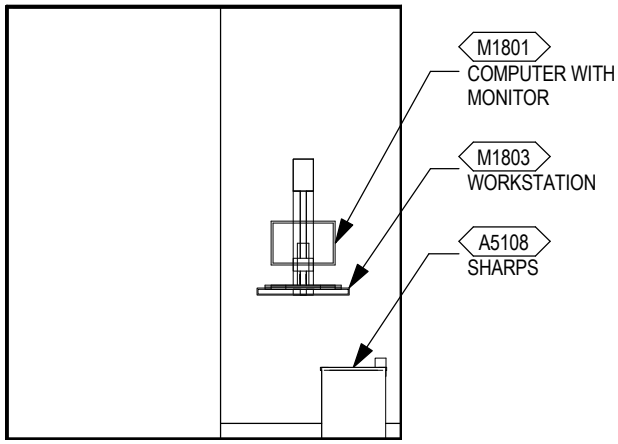

ELEVATION 1

DRAFT

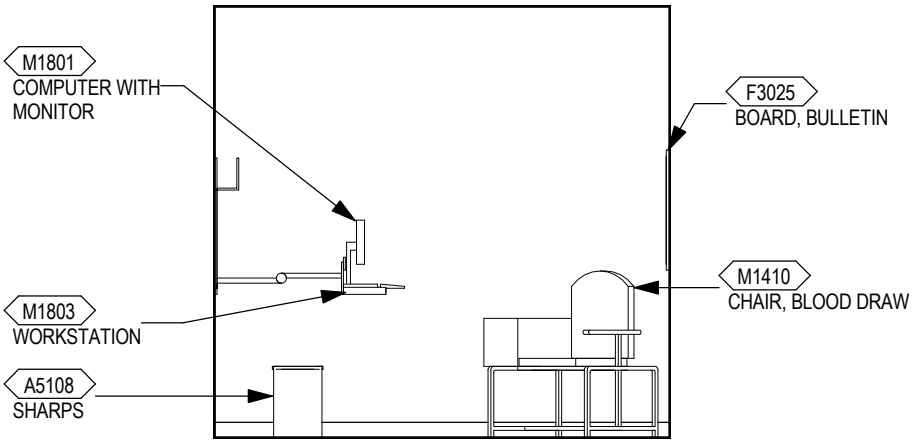

ELEVATION 2

U.S. Department of Veterans Affairs

CBOC, LBVP1, BLOOD SPECIMEN COLLECTION ROOM - ELEVATIONS

SKETCH TITLE

1/4" = 1'-0"

SCALE

Plot Date: 9/26/2017 1:44:27 PM

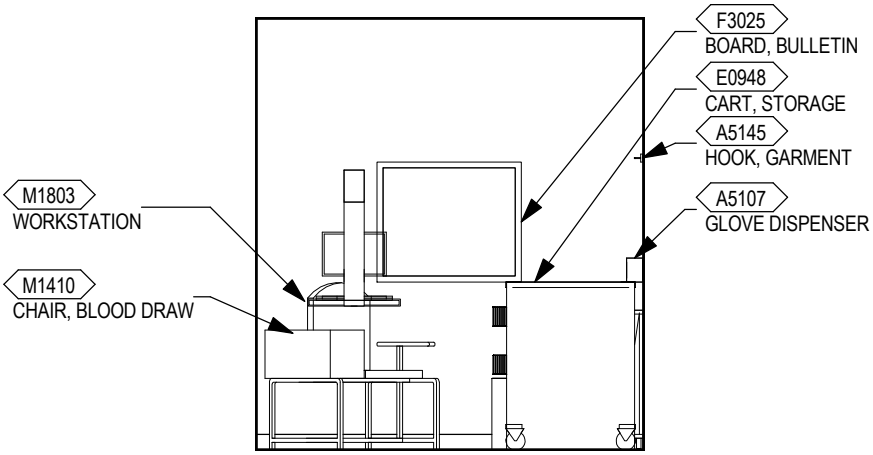

ELEVATION 3

DRAFT

U.S. Department of Veterans Affairs

CBOC, LBVP1, BLOOD SPECIMEN COLLECTION ROOM - AXON

SKETCH TITLE

Plot Date: 9/26/2017 1:44:28 PM

SCALE

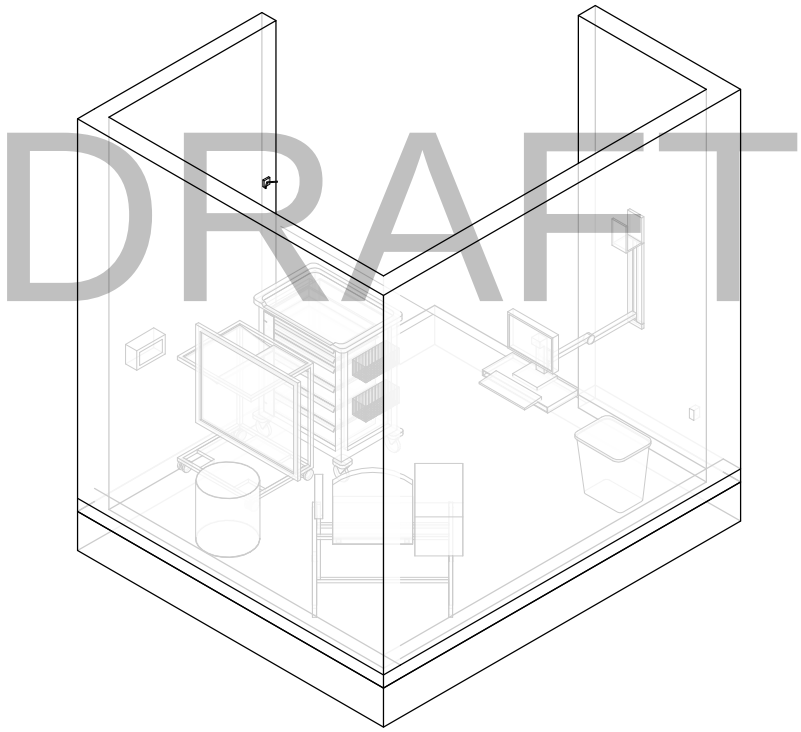

U.S. Department of Veterans Affairs

CBOC, LBVP1, BLOOD SPECIMEN COLLECTION ROOM - EQUIPMENT LIST

SKETCH TITLE

Plot Date: 9/26/2017 1:44:28 PM

SCALE

LBVP1, EQUIPMENT LIST		
JSN	EQUIPMENT NAME	Count
A5108	SHARPS	1
E0948	CART, STORAGE	1
M1410	CHAIR, BLOOD DRAW	1
M1801	COMPUTER WITH MONITOR	1
M3072	INFECTIOUS WASTE BAG	1

DRAFT

U.S. Department of Veterans Affairs

CBOC, OFDC2, CONSULT ROOM - PLAN

SKETCH TITLE

1/4" = 1'-0"

SCALE

Plot Date: 9/26/2017 1:44:29 PM

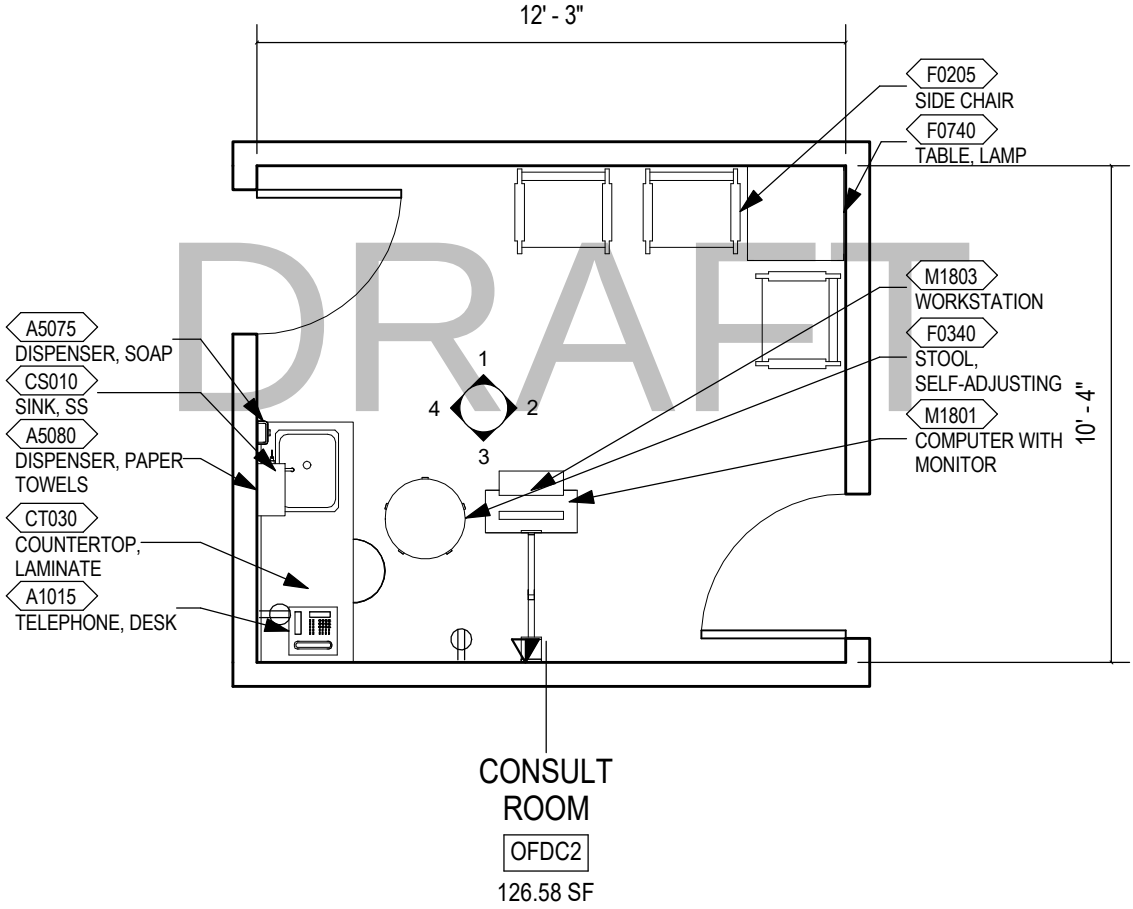

U.S. Department of Veterans Affairs

CBOC, OFDC2, CONSULT ROOM - RCP

SKETCH TITLE

1/4" = 1'-0"

SCALE

Plot Date: 9/26/2017 1:44:29 PM

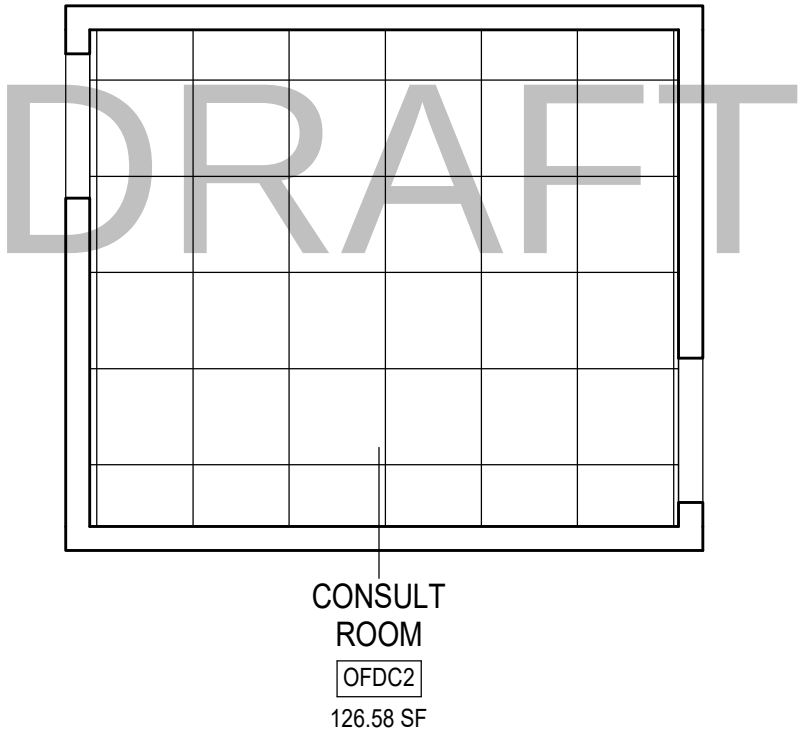

U.S. Department of Veterans Affairs

CBOC, OFDC2, CONSULT ROOM - ELEVATIONS

SKETCH TITLE

1/4" = 1'-0"

SCALE

Plot Date: 9/26/2017 1:44:30 PM

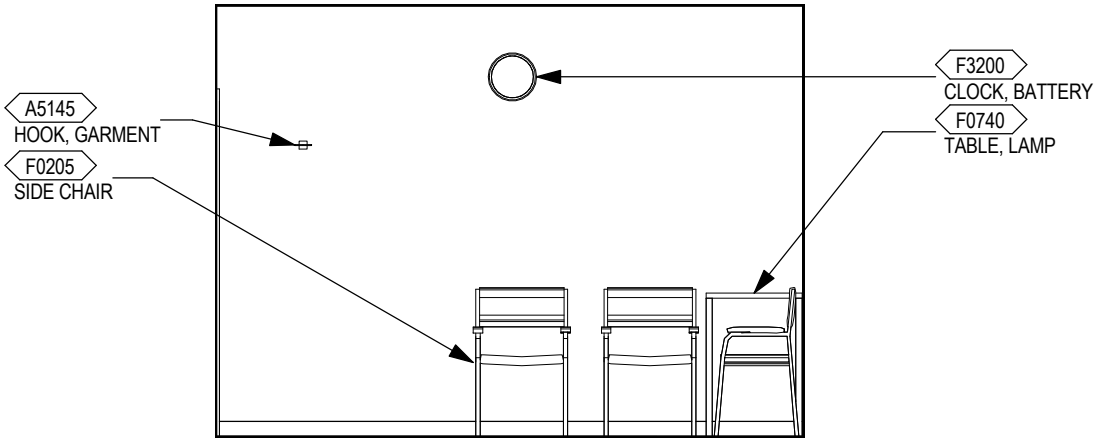

ELEVATION 1

DRAFT

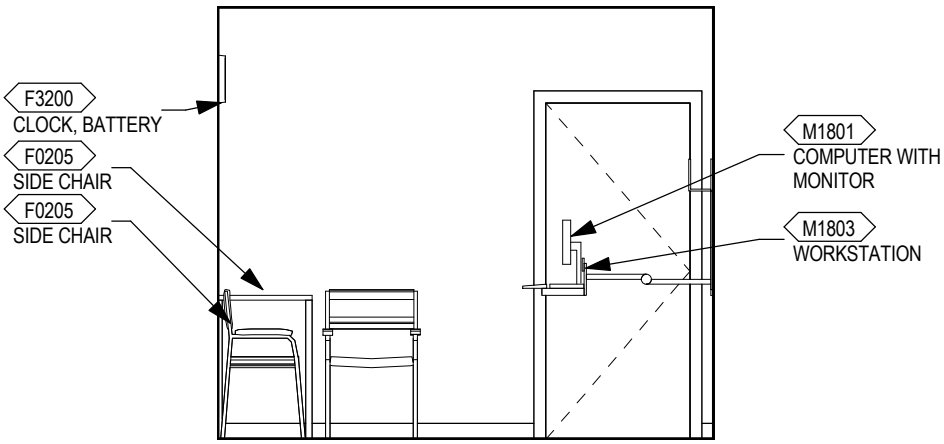

ELEVATION 2

U.S. Department of Veterans Affairs

CBOC, OFDC2, CONSULT ROOM - ELEVATIONS

SKETCH TITLE

1/4" = 1'-0"

SCALE

Plot Date: 9/26/2017 1:44:30 PM

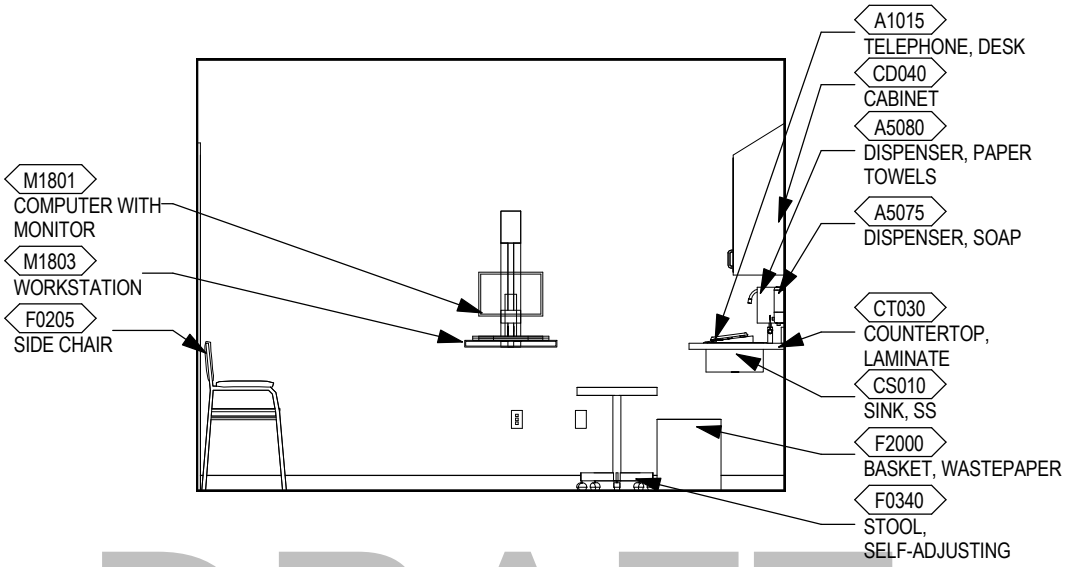

ELEVATION 3

DRAFT

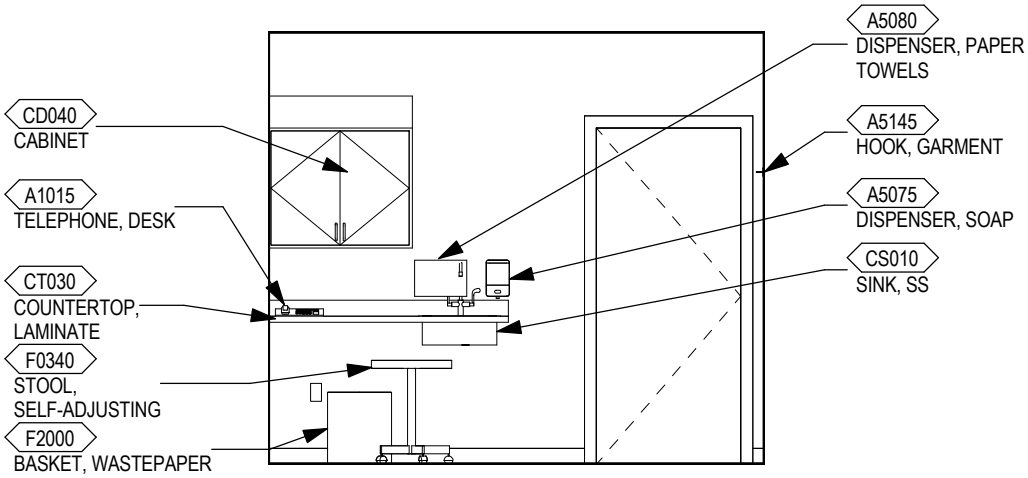

ELEVATION 4

U.S. Department of Veterans Affairs

CBOC, OFDC2, CONSULT ROOM - AXON

SKETCH TITLE

Plot Date: 9/26/2017 1:44:31 PM

SCALE

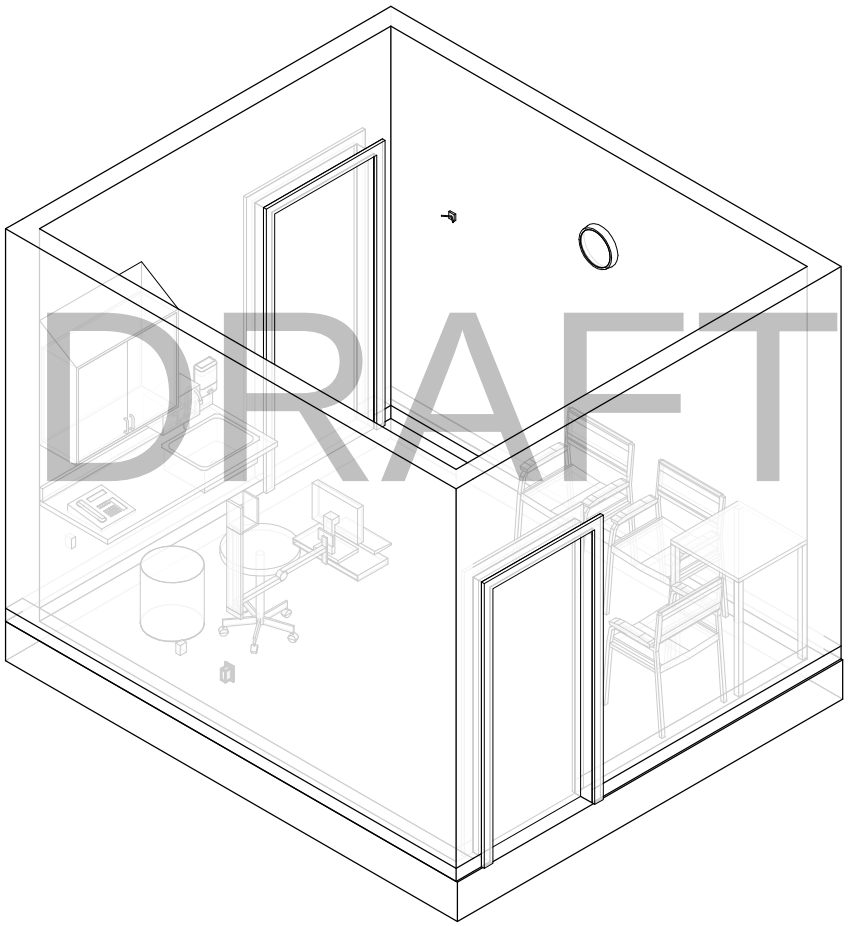

U.S. Department of Veterans Affairs

CBOC, OFDC2, CONSULT ROOM - EQUIPMENT LIST

SKETCH TITLE

Plot Date: 9/26/2017 1:44:31 PM

SCALE

OFDC2, EQUIPMENT LIST		
JSN	EQUIPMENT NAME	Count
CS010	SINK, SS	1
CT030	COUNTERTOP, LAMINATE	1
F0205	SIDE CHAIR	3
F0340	STOOL, SELF-ADJUSTING	1
M1801	COMPUTER WITH MONITOR	1

DRAFT

U.S. Department of Veterans Affairs

CBOC, OPMH3,
BIOFEEDBACK/NEUROPSYCH - PLAN

SKETCH TITLE

1/4" = 1'-0"

SCALE

Plot Date: 9/26/2017 1:44:32 PM

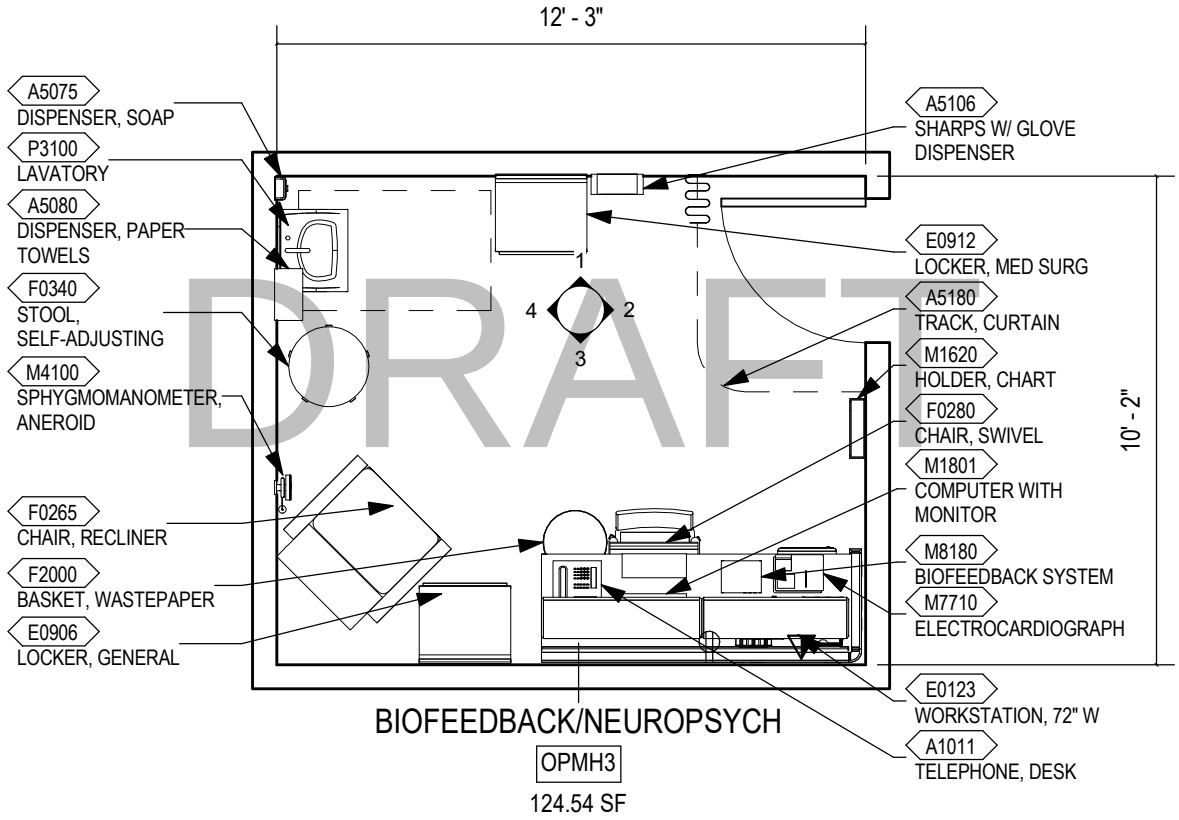

BIOFEEDBACK/NEUROPSYCH

OPMH3

124.54 SF

U.S. Department of Veterans Affairs

CBOC, OPMH3,
BIOFEEDBACK/NEUROPSYCH - RCP

SKETCH TITLE

1/4" = 1'-0"

SCALE

Plot Date: 9/26/2017 1:44:32 PM

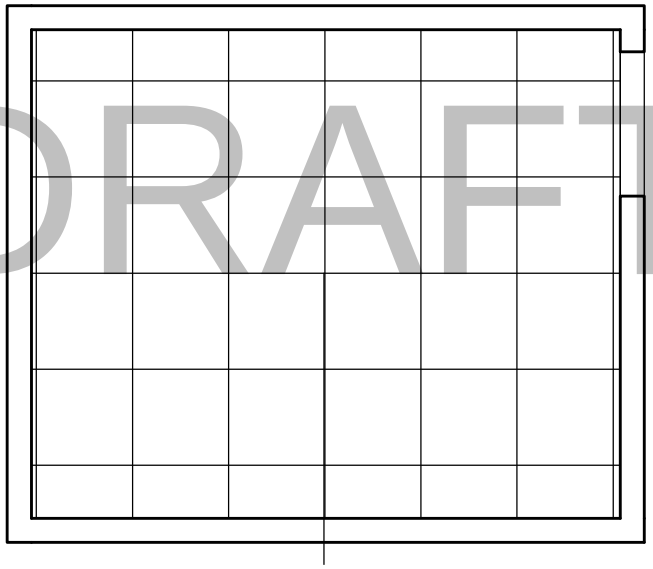

DRAFT

BIOFEEDBACK/NEUROPSYCH

OPMH3

124.54 SF

CBOC, OPMH3,
BIOFEEDBACK/NEUROPSYCH -
ELEVATIONS

SKETCH TITLE

1/4" = 1'-0"

SCALE

Plot Date: 9/26/2017 1:44:33 PM

U.S. Department of Veterans Affairs

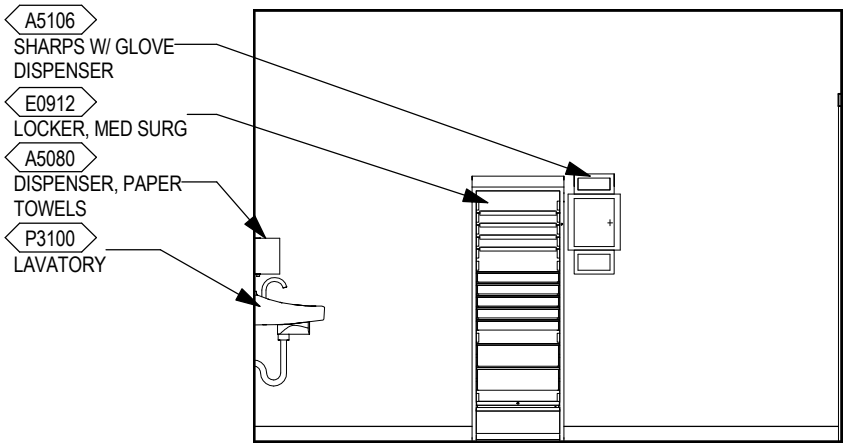

DRAFT

ELEVATION 1

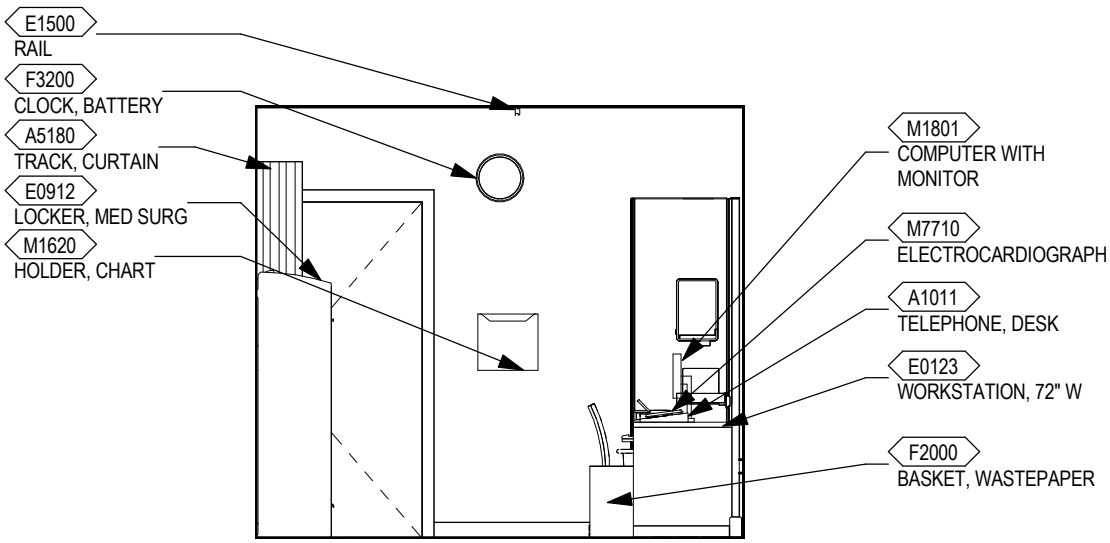

ELEVATION 2

U.S. Department of Veterans Affairs

CBOC, OPMH3, BIOFEEDBACK/NEUROPSYCH - ELEVATIONS

SKETCH TITLE

1/4" = 1'-0"

SCALE

Plot Date: 9/26/2017 1:44:33 PM

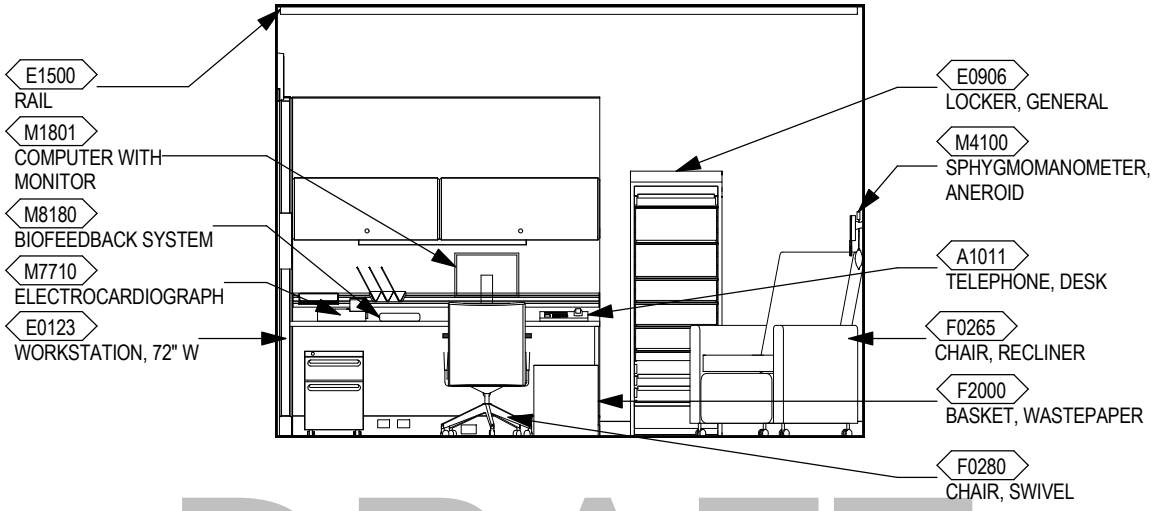

ELEVATION 3

DRAFT

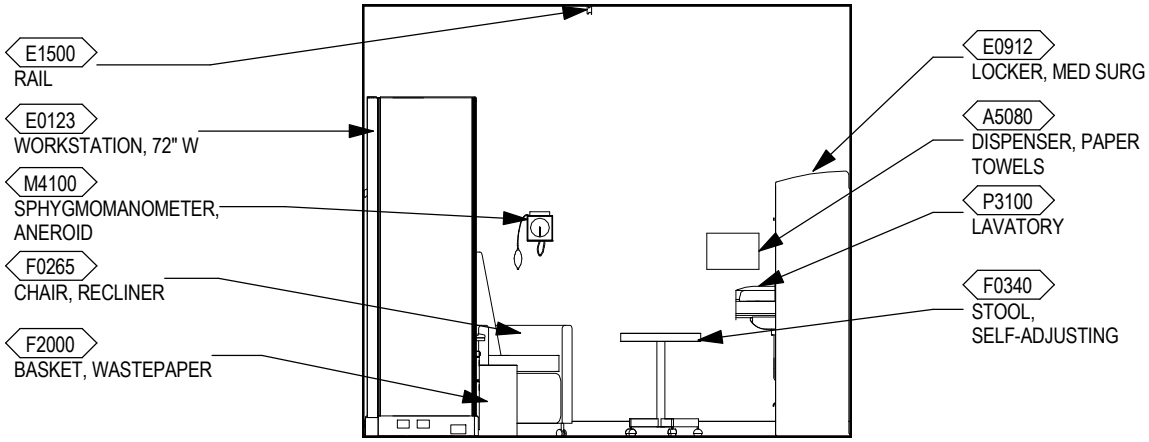

ELEVATION 4

U.S. Department of Veterans Affairs

CBOC, OPMH3,
BIOFEEDBACK/NEUROPSYCH - AXON

SKETCH TITLE

Plot Date: 9/26/2017 1:44:34 PM

SCALE

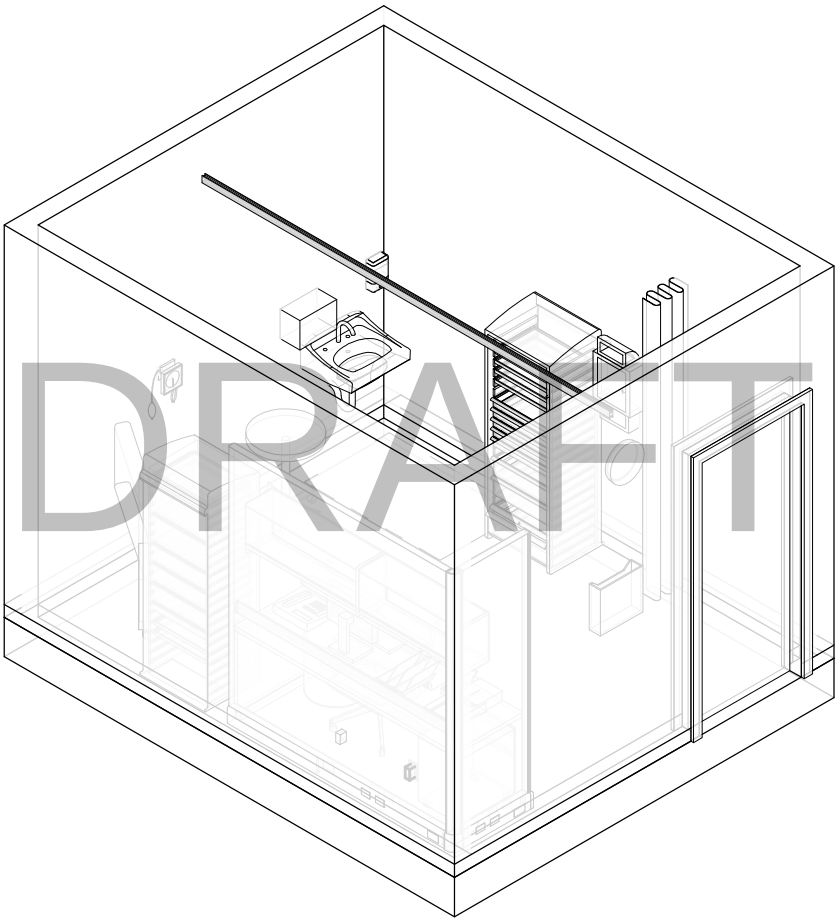

U.S. Department of Veterans Affairs

CBOC, OPMH3, BIOFEEDBACK/NEUROPSYCH - EQUIPMENT LIST

SKETCH TITLE

Plot Date: 9/26/2017 1:44:34 PM

SCALE

OPMH3, EQUIPMENT LIST		
JSN	EQUIPMENT NAME	Count
E0906	LOCKER, GENERAL	1
E0912	LOCKER, MED SURG	1
F0265	CHAIR, RECLINER	1
F0340	STOOL, SELF-ADJUSTING	1
M1801	COMPUTER WITH MONITOR	1
P3100	LAVATORY	1

DRAFT

U.S. Department of Veterans Affairs

CBOC, RCA02, ALCOVE, MEDICATION - PLAN

SKETCH TITLE

1/4" = 1'-0"

SCALE

Plot Date: 9/26/2017 1:44:39 PM

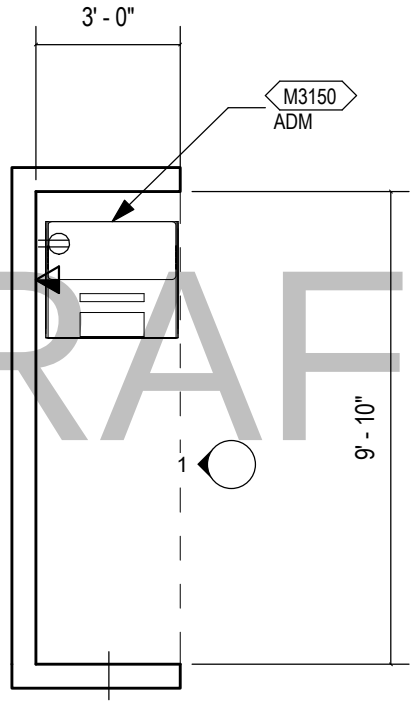

DRAFT

ALCOVE, MEDICATION

RCA02

29.50 SF

U.S. Department of Veterans Affairs

CBOC, RCA02, ALCOVE, MEDICATION - RCP

SKETCH TITLE

1/4" = 1'-0"

SCALE

Plot Date: 9/26/2017 1:44:39 PM

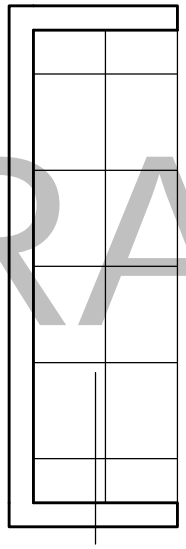

ALCOVE, MEDICATION

RCA02

29.50 SF

DRAFT

U.S. Department of Veterans Affairs

CBOC, RCA02, ALCOVE, MEDICATION - ELEVATION

SKETCH TITLE

1/4" = 1'-0"

SCALE

Plot Date: 9/26/2017 1:44:40 PM

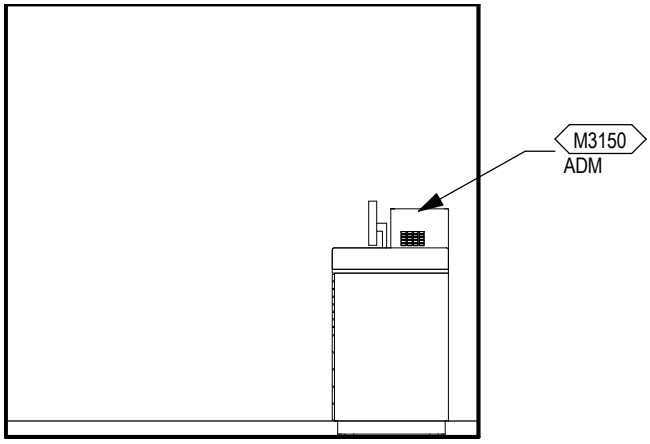

ELEVATION 1

DRAFT

U.S. Department of Veterans Affairs

CBOC, RCA02, ALCOVE, MEDICATION - AXON

SKETCH TITLE

Plot Date: 9/26/2017 1:44:40 PM

SCALE

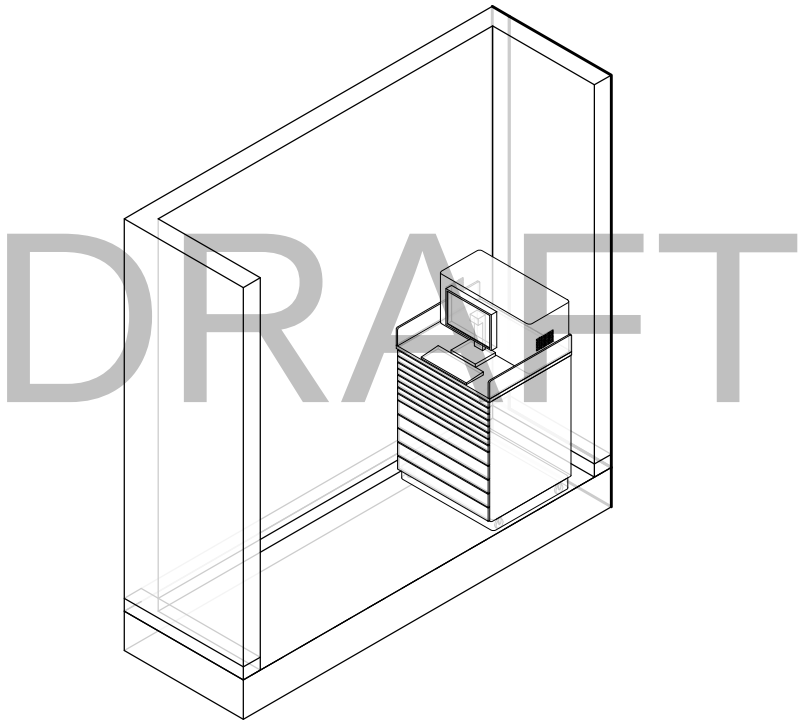

U.S. Department of Veterans Affairs

CBOC, RCA02, ALCOVE, MEDICATION - EQUIPMENT LIST

SKETCH TITLE

Plot Date: 9/26/2017 1:44:41 PM

SCALE

RCA02, EQUIPMENT LIST		
JSN	EQUIPMENT NAME	Count
M3150	ADM	2

DRAFT

U.S. Department of Veterans Affairs

CBOC, TLTU1, TOILET, GENERAL - PLAN

SKETCH TITLE

1/4" = 1'-0"

SCALE

Plot Date: 9/26/2017 1:44:41 PM

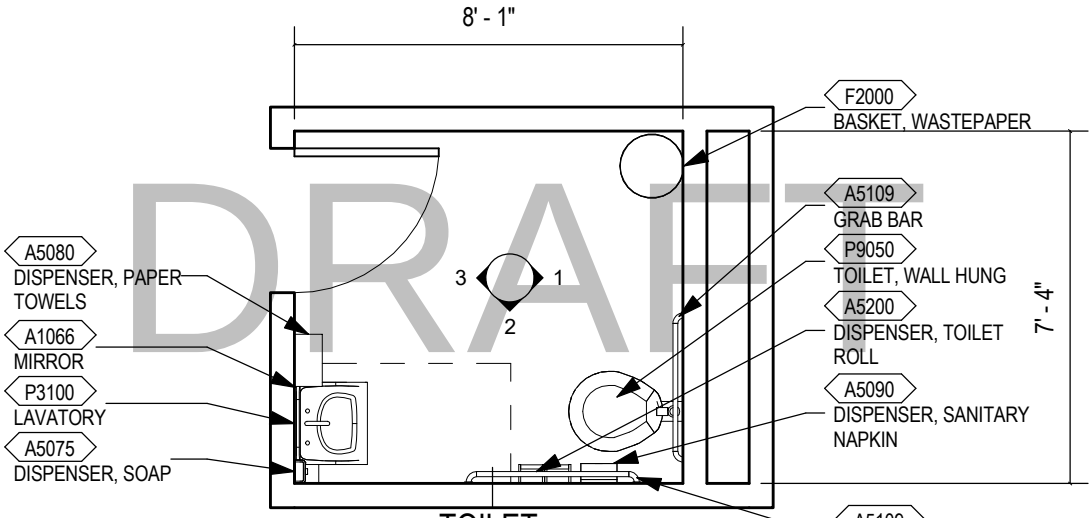

TOILET, GENERAL

TLTU1

59.28 SF

U.S. Department of Veterans Affairs

CBOC, TLTU1, TOILET, GENERAL - RCP

SKETCH TITLE

1/4" = 1'-0"

SCALE

Plot Date: 9/26/2017 1:44:42 PM

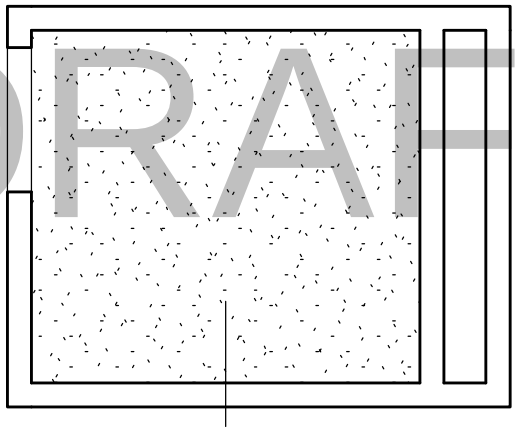

DRAFT

TOILET,
GENERAL

TLTU1

59.28 SF

U.S. Department of Veterans Affairs

CBOC, TLTU1, TOILET, GENERAL - ELEVATIONS

SKETCH TITLE

1/4" = 1'-0"

SCALE

Plot Date: 9/26/2017 1:44:42 PM

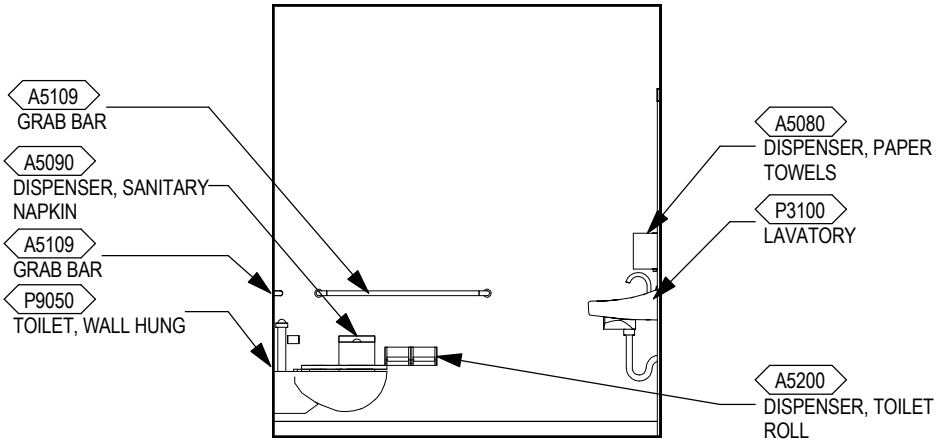

ELEVATION 1

DRAFT

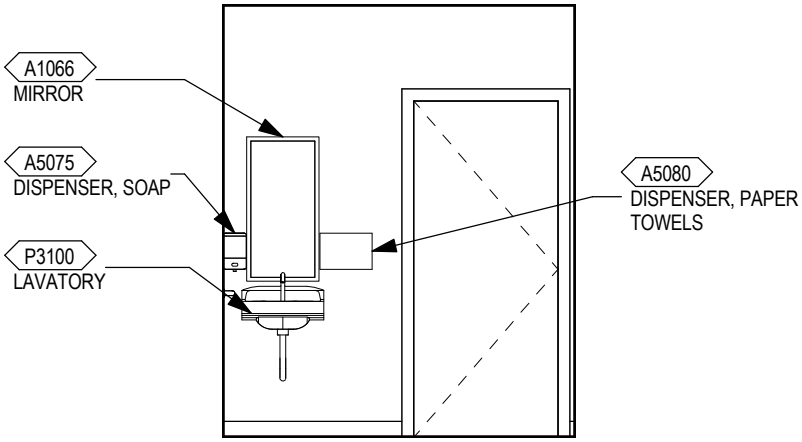

ELEVATION 2

U.S. Department of Veterans Affairs

CBOC, TLTU1, TOILET, GENERAL - ELEVATIONS

SKETCH TITLE

1/4" = 1'-0"

SCALE

Plot Date: 9/26/2017 1:44:43 PM

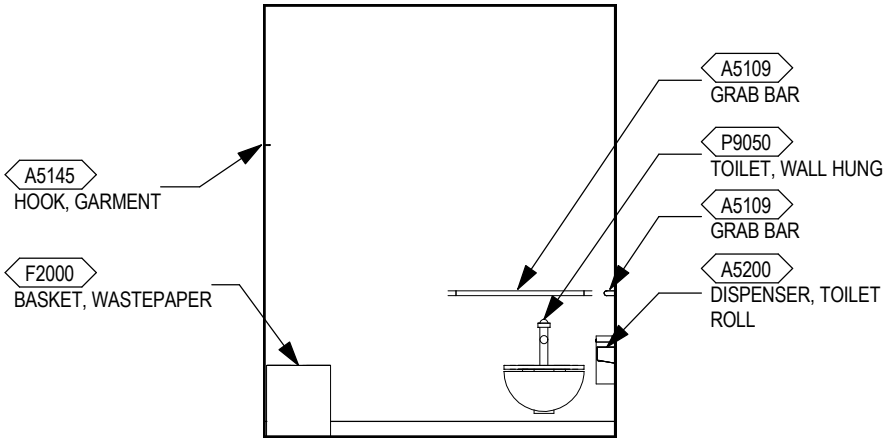

DRAFT

ELEVATION 3

U.S. Department of Veterans Affairs

CBOC, TLTU1, TOILET, GENERAL - AXON

SKETCH TITLE

Plot Date: 9/26/2017 1:44:43 PM

SCALE

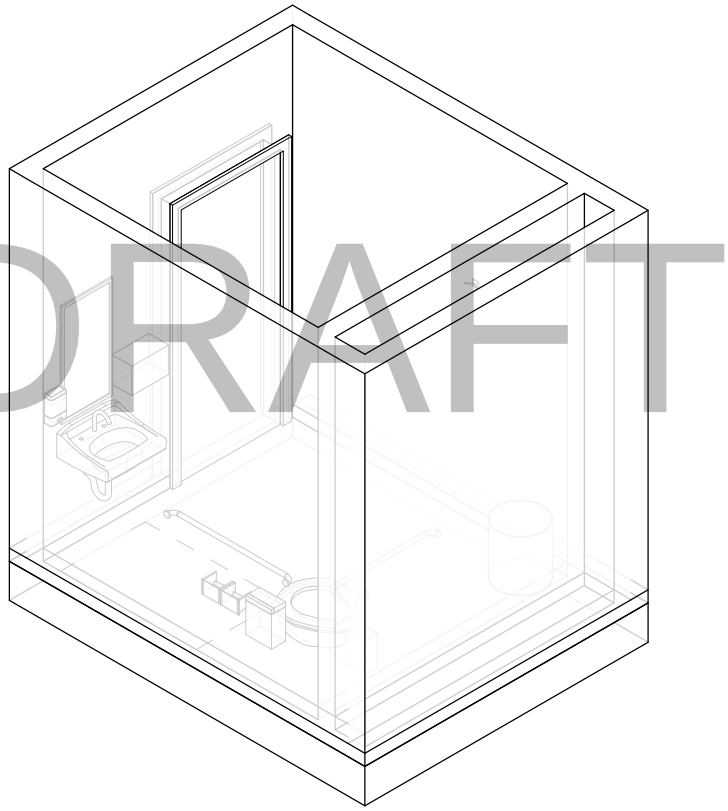

U.S. Department of Veterans Affairs

CBOC, TLTU1, TOILET, GENERAL - EQUIPMENT LIST

SKETCH TITLE

Plot Date: 9/26/2017 1:44:44 PM

SCALE

TLTU1, EQUIPMENT LIST		
JSN	EQUIPMENT NAME	Count
A1066	MIRROR	3
P3100	LAVATORY	5

DRAFT

U.S. Department of Veterans Affairs

CBOC, TRPR1, PROCEDURE ROOM, GENERAL - PLAN

SKETCH TITLE

1/4" = 1'-0"

SCALE

Plot Date: 9/26/2017 1:44:44 PM

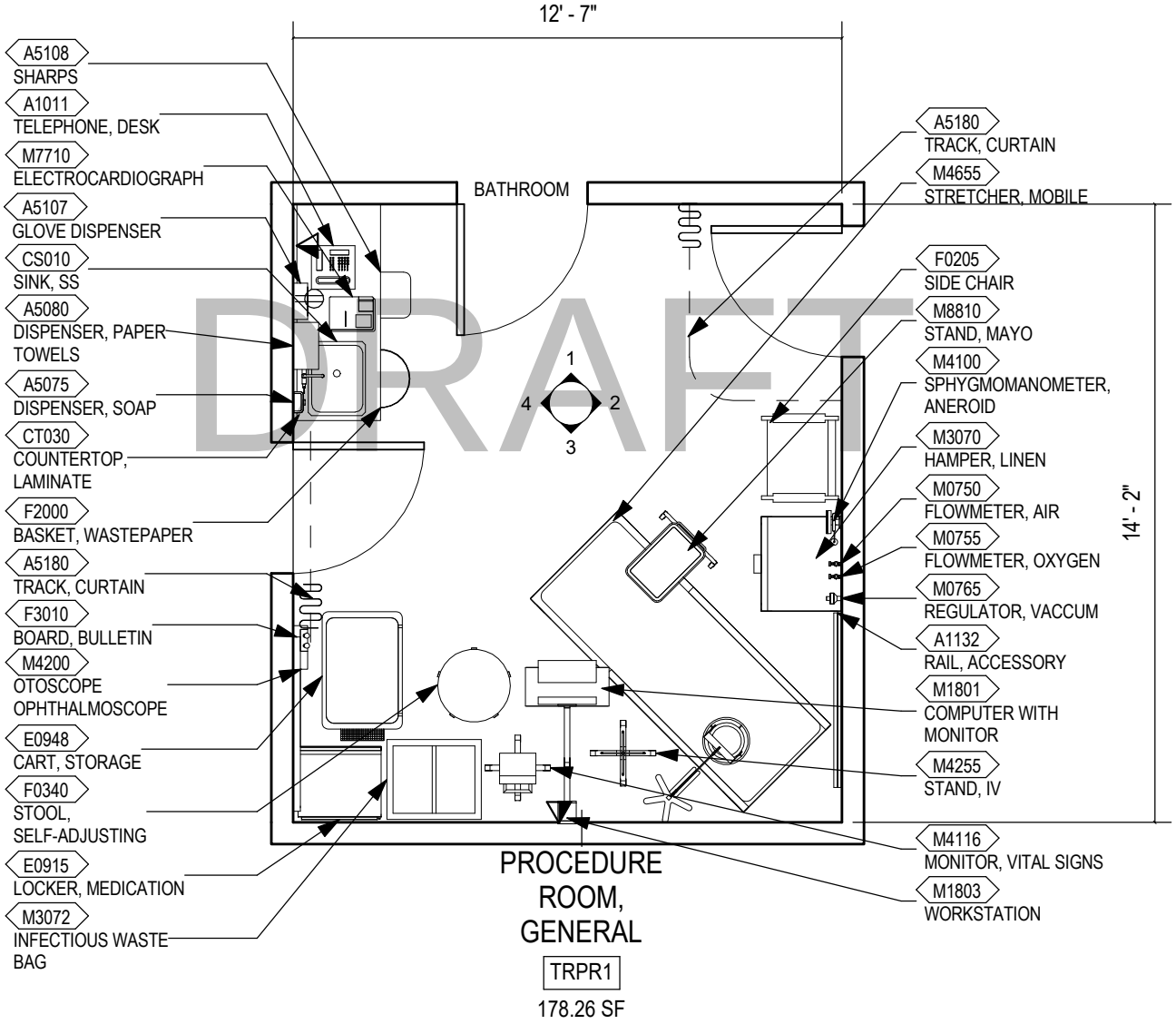

DRAFT

U.S. Department of Veterans Affairs

CBOC, TRPR1, PROCEDURE ROOM, GENERAL - RCP

SKETCH TITLE

1/4" = 1'-0"

SCALE

Plot Date: 9/26/2017 1:44:45 PM

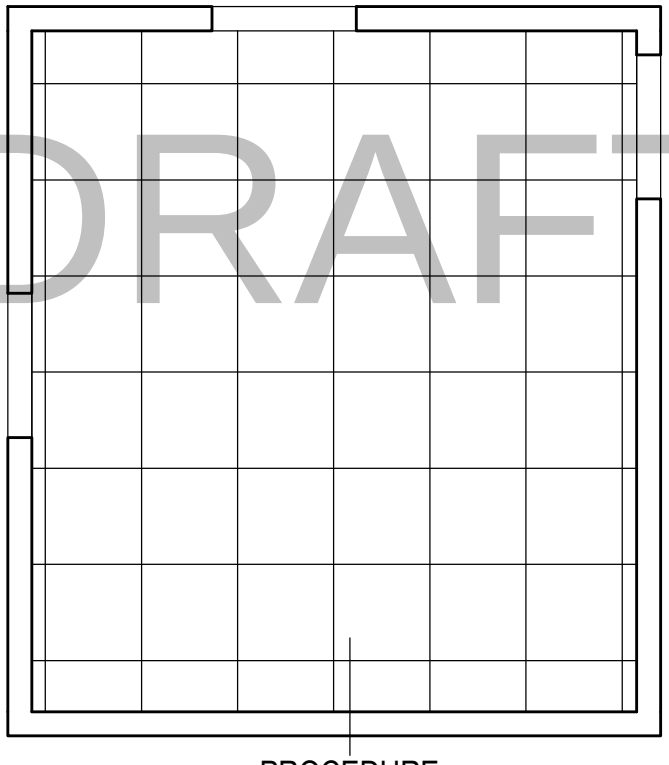

DRAFT

PROCEDURE ROOM, GENERAL

TRPR1

178.26 SF

U.S. Department of Veterans Affairs

CBOC, TRPR1, PROCEDURE ROOM, GENERAL - ELEVATIONS

SKETCH TITLE

1/4" = 1'-0"

SCALE

Plot Date: 9/26/2017 1:44:45 PM

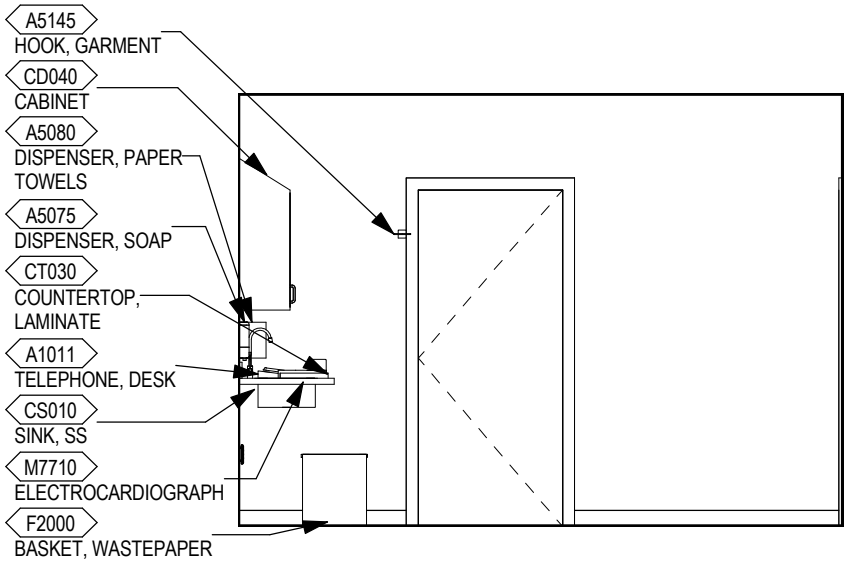

ELEVATION 1

DRAFT

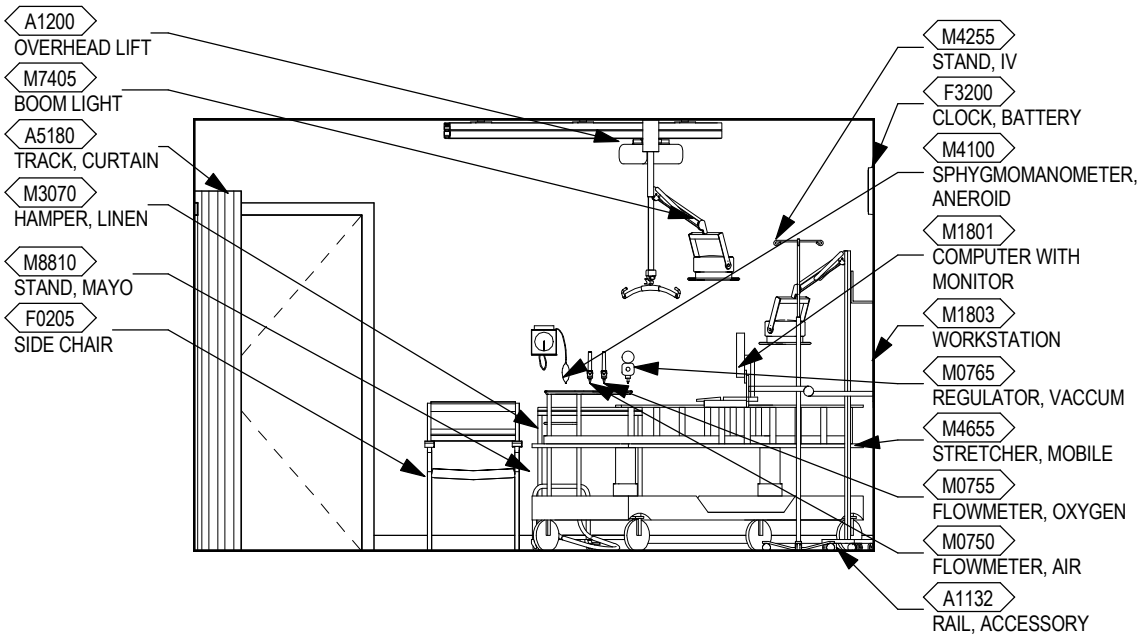

ELEVATION 2

U.S. Department of Veterans Affairs

CBOC, TRPR1, PROCEDURE ROOM, GENERAL - ELEVATIONS

Plot Date: 9/26/2017 1:44:46 PM

SKETCH TITLE

1/4" = 1'-0"

SCALE

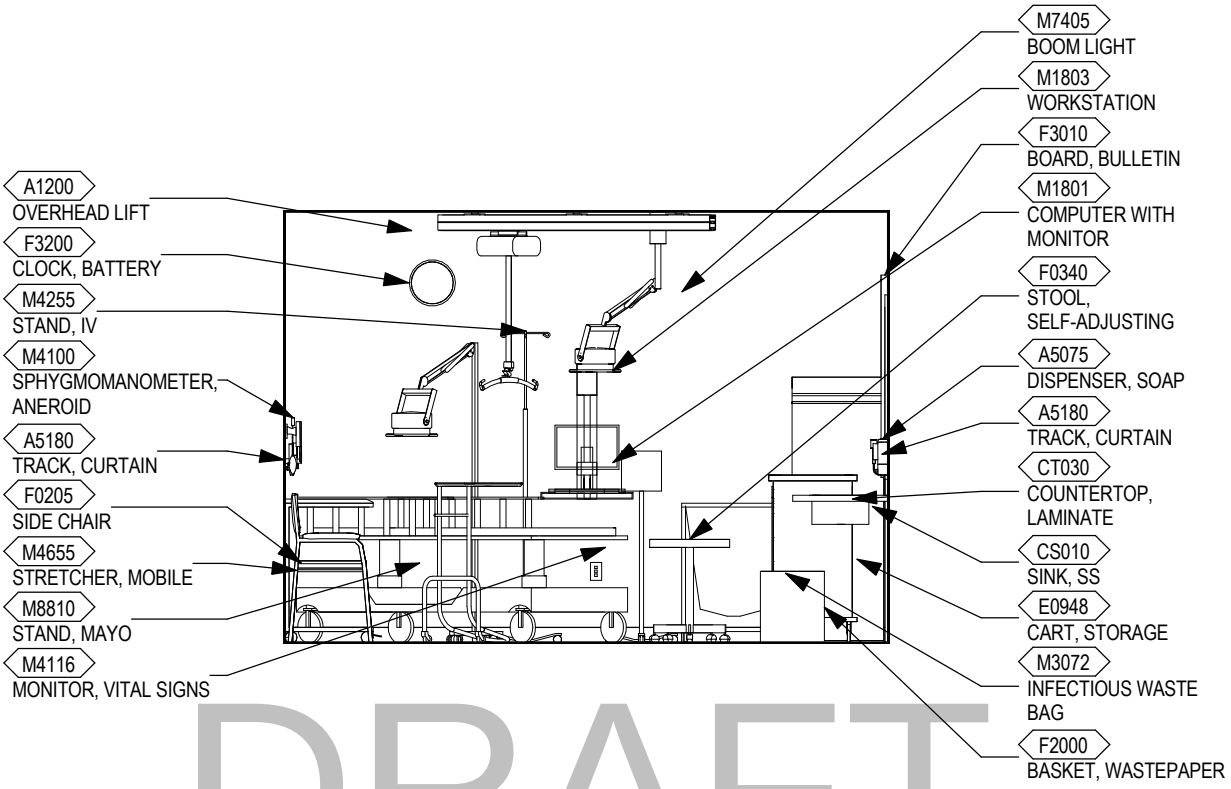

ELEVATION 3

DRAFT

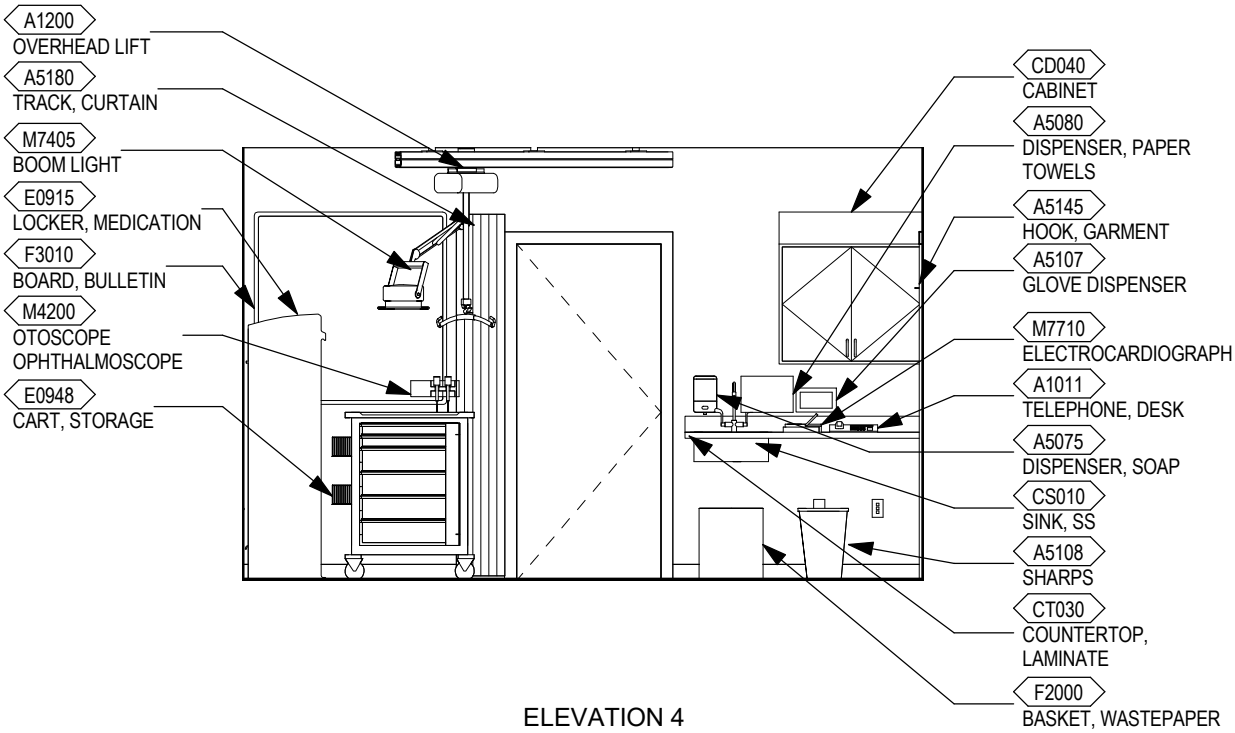

ELEVATION 4

U.S. Department of Veterans Affairs

CBOC, TRPR1, PROCEDURE ROOM, GENERAL - AXON

SKETCH TITLE

Plot Date: 9/26/2017 1:44:47 PM

SCALE

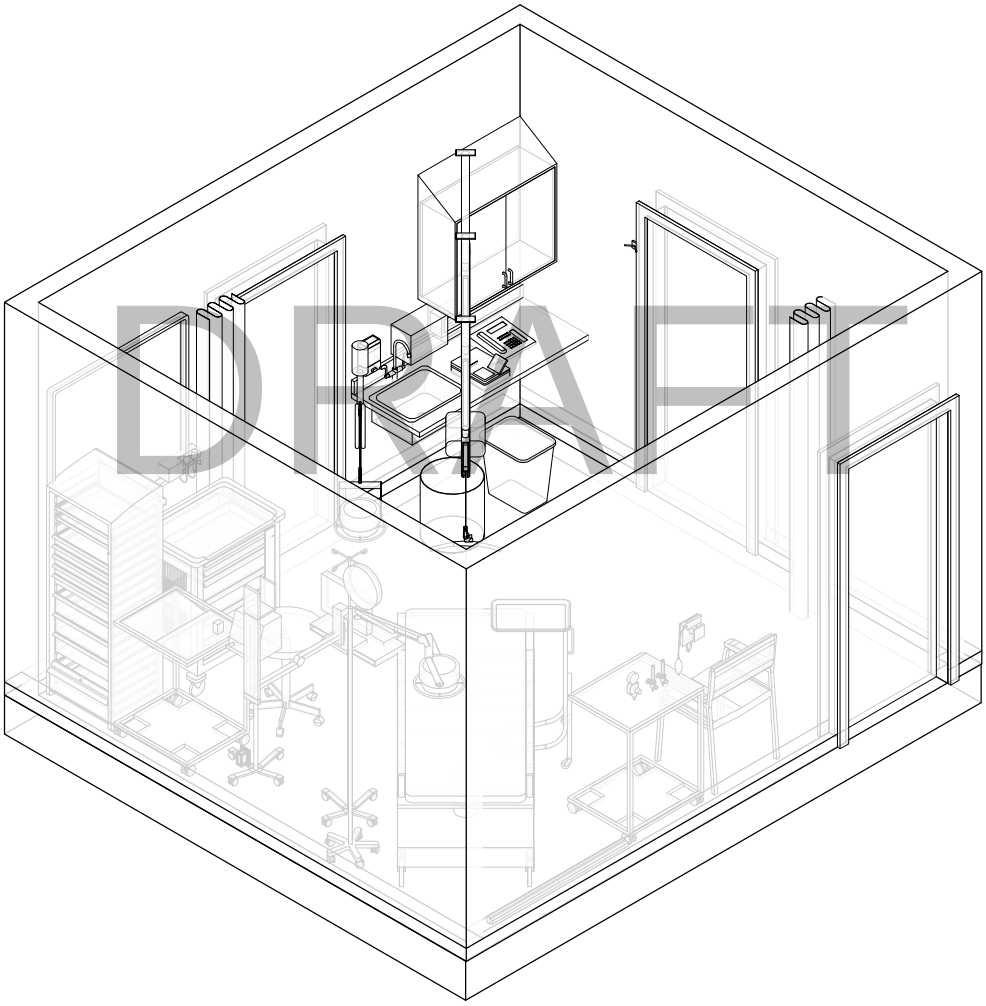

U.S. Department of Veterans Affairs

CBOC, TRPR1, PROCEDURE ROOM, GENERAL - EQUIPMENT LIST

SKETCH TITLE

Plot Date: 9/26/2017 1:44:47 PM

SCALE

TRPR1, EQUIPMENT LIST		
JSN	EQUIPMENT NAME	Count
A5108	SHARPS	2
CS010	SINK, SS	2
CT030	COUNTERTOP, LAMINATE	2
E0915	LOCKER, MEDICATION	2
E0948	CART, STORAGE	2
F0205	SIDE CHAIR	2
F0340	STOOL, SELF-ADJUSTING	2
M1801	COMPUTER WITH MONITOR	2
M3070	HAMPER, LINEN	2
M3072	INFECTIOUS WASTE BAG	2
M4116	MONITOR, VITAL SIGNS	2
M4255	STAND, IV	2
M4655	STRETCHER, MOBILE	2
M7401	MOBILE LIGHT	2
M7405	BOOM LIGHT	1
M8810	STAND, MAYO	2

DRAFT

U.S. Department of Veterans Affairs

CBOC, UCCL1, UTILITY ROOM, CLEAN - PLAN

SKETCH TITLE

1/4" = 1'-0"

SCALE

Plot Date: 9/26/2017 1:44:48 PM

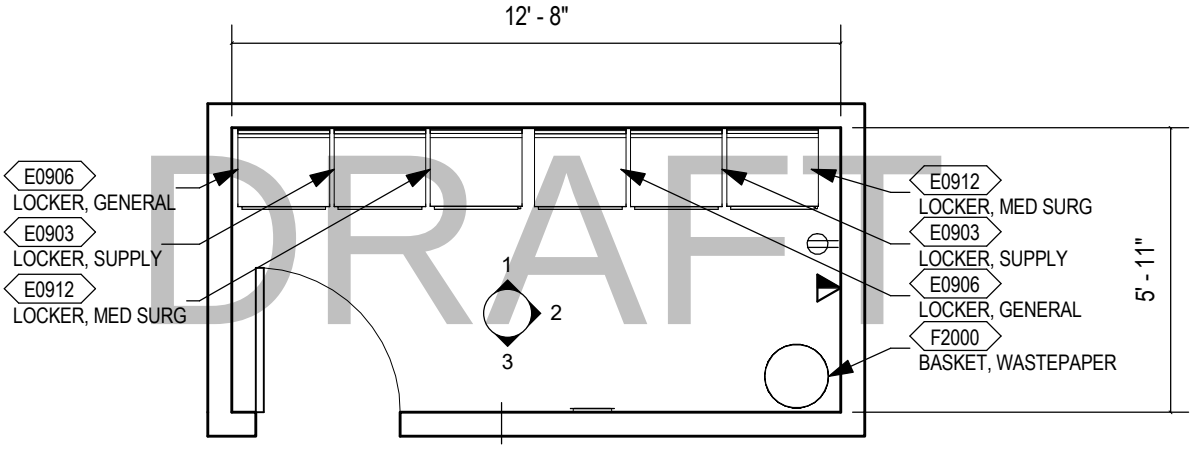

UTILITY ROOM, CLEAN

UCCL1

74.94 SF

U.S. Department of Veterans Affairs

CBOC, UCCL1, UTILITY ROOM, CLEAN - RCP

SKETCH TITLE

1/4" = 1'-0"

SCALE

Plot Date: 9/26/2017 1:44:48 PM

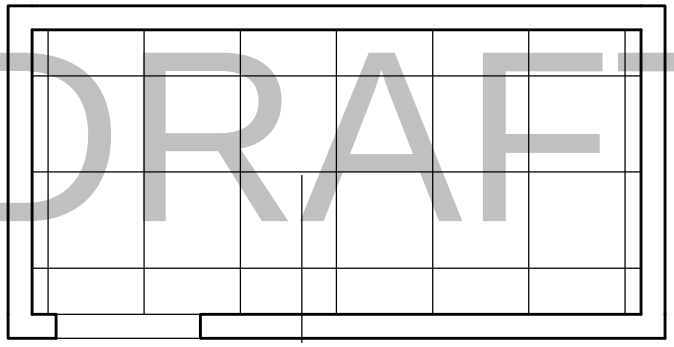

DRAFT

UTILITY ROOM, CLEAN

UCCL1

74.94 SF

U.S. Department of Veterans Affairs

CBOC, UCCL1, UTILITY ROOM, CLEAN - ELEVATIONS

SKETCH TITLE

1/4" = 1'-0"

SCALE

Plot Date: 9/26/2017 1:44:49 PM

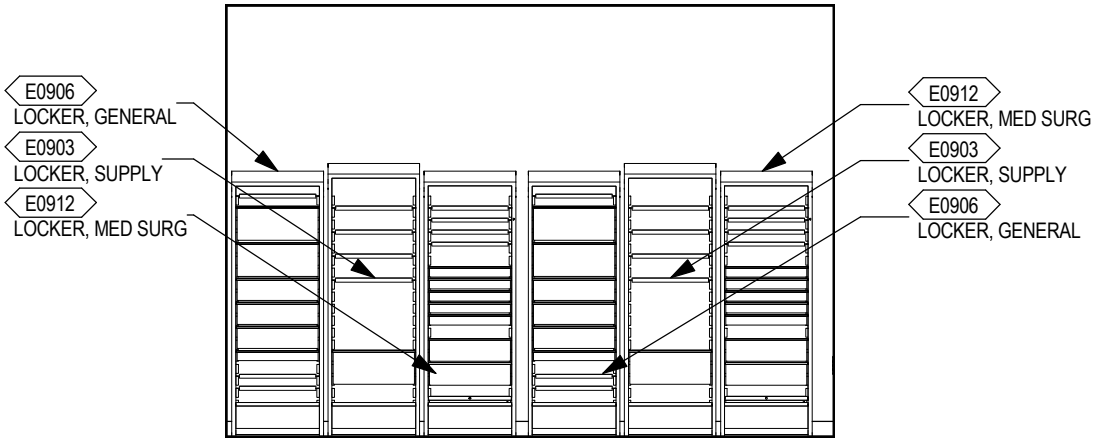

ELEVATION 1

DRAFT

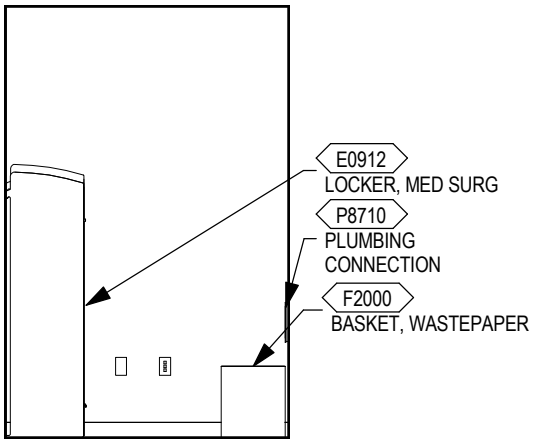

ELEVATION 2

U.S. Department of Veterans Affairs

CBOC, UCCL1, UTILITY ROOM, CLEAN - ELEVATIONS

SKETCH TITLE

1/4" = 1'-0"

SCALE

Plot Date: 9/26/2017 1:44:49 PM

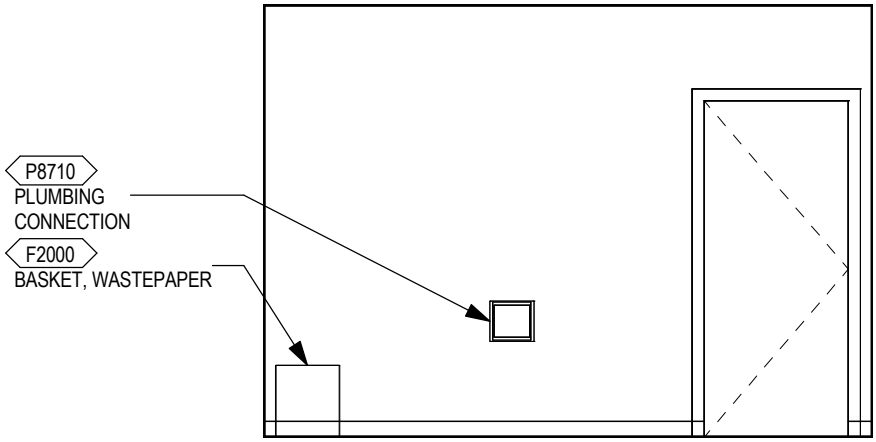

ELEVATION 3

DRAFT

U.S. Department of Veterans Affairs

CBOC, UCCL1, UTILITY ROOM, CLEAN - AXON

SKETCH TITLE

Plot Date: 9/26/2017 1:44:50 PM

SCALE

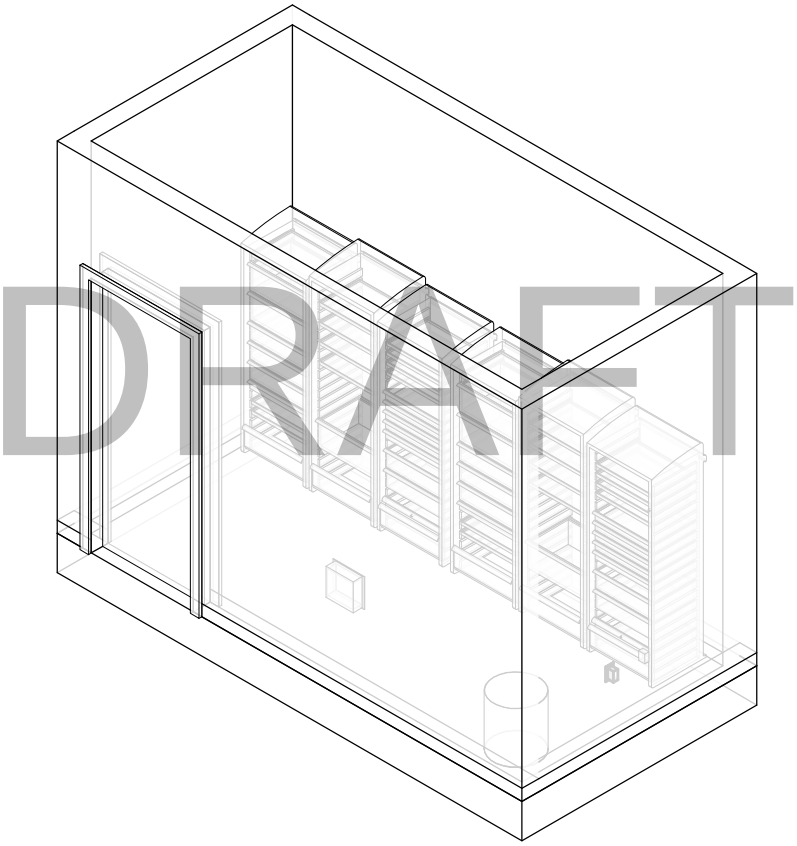

U.S. Department of Veterans Affairs

CBOC, UCCL1, UTILITY ROOM, CLEAN - EQUIPMENT LIST

SKETCH TITLE

SCALE

Plot Date: 9/26/2017 1:44:51 PM

UCCL1, EQUIPMENT LIST		
JSN	EQUIPMENT NAME	Count
E0903	LOCKER, SUPPLY	4
E0906	LOCKER, GENERAL	4
E0912	LOCKER, MED SURG	4

DRAFT

U.S. Department of Veterans Affairs

CBOC, WRTM2, TELEHEALTH ROOM - PLAN

SKETCH TITLE

1/4" = 1'-0"

SCALE

Plot Date: 9/26/2017 1:44:51 PM

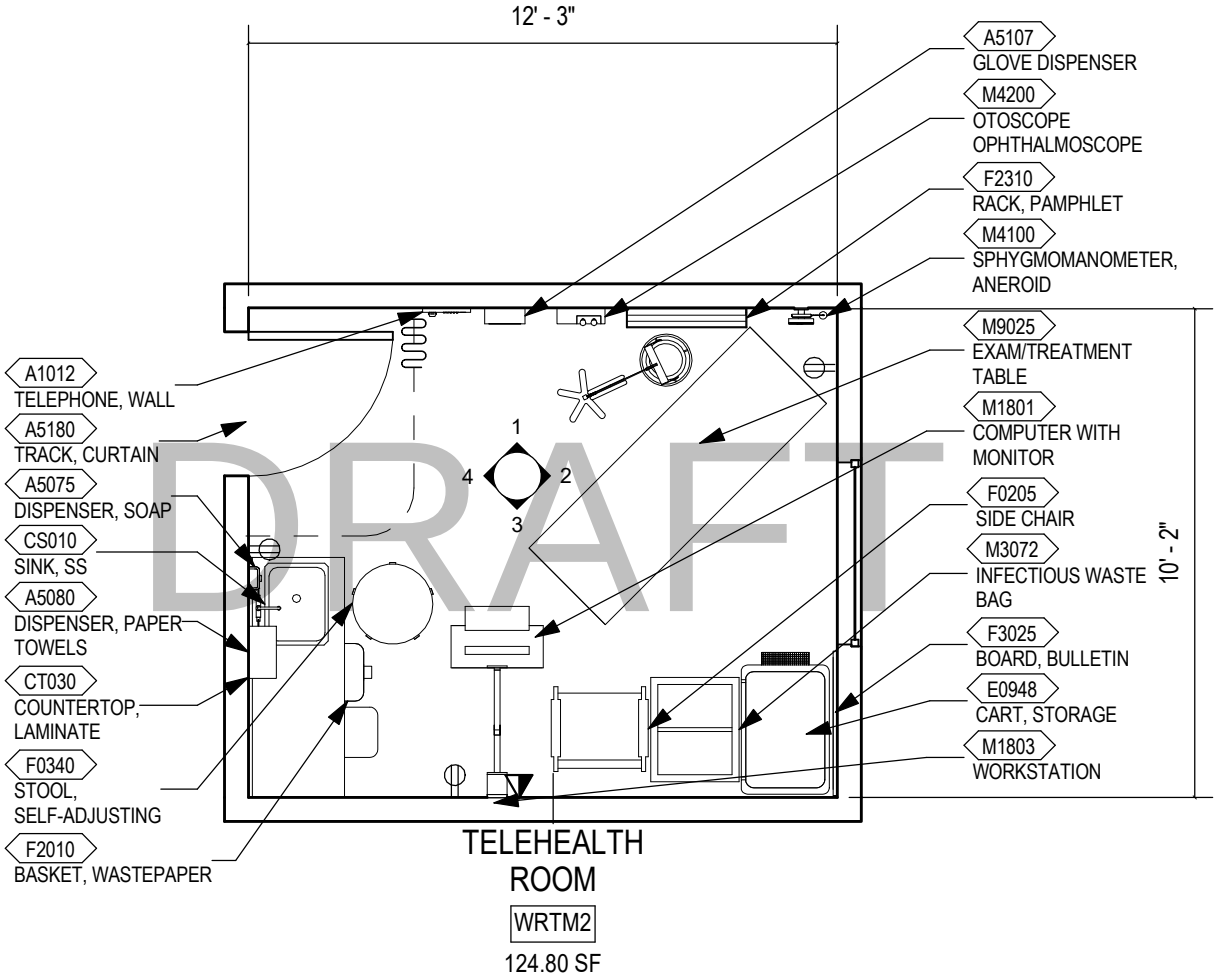

TELEHEALTH ROOM

WRTM2

124.80 SF

U.S. Department of Veterans Affairs

CBOC, WRTM2, TELEHEALTH ROOM - RCP

SKETCH TITLE

1/4" = 1'-0"

SCALE

Plot Date: 9/26/2017 1:44:52 PM

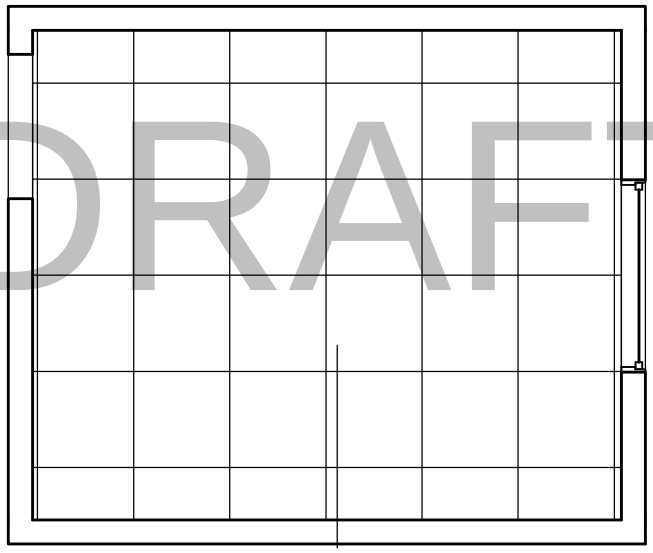

DRAFT

TELEHEALTH ROOM

WRTM2

124.80 SF

U.S. Department of Veterans Affairs

CBOC, WRTM2, TELEHEALTH ROOM - ELEVATIONS

Plot Date: 9/26/2017 1:44:52 PM

SKETCH TITLE

1/4" = 1'-0"

SCALE

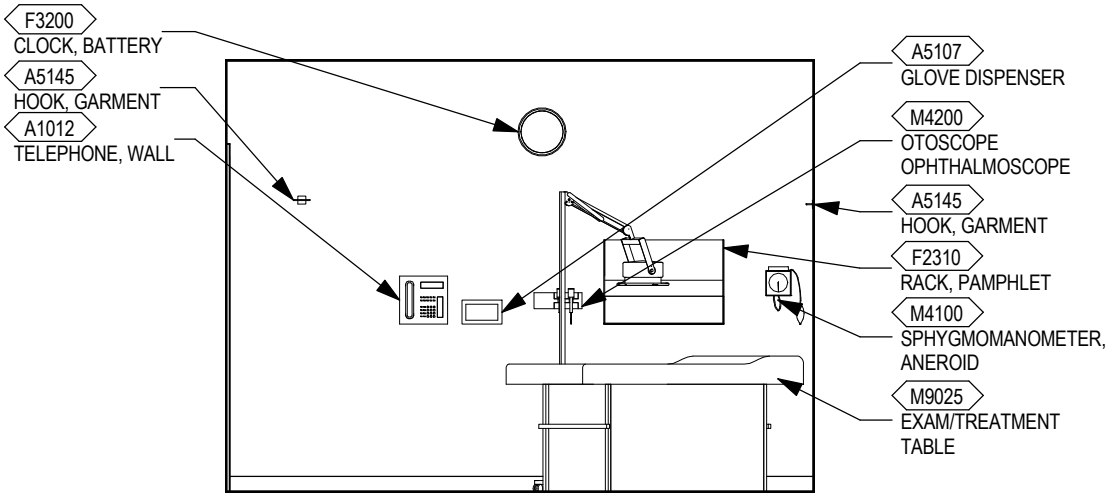

ELEVATION 1

DRAFT

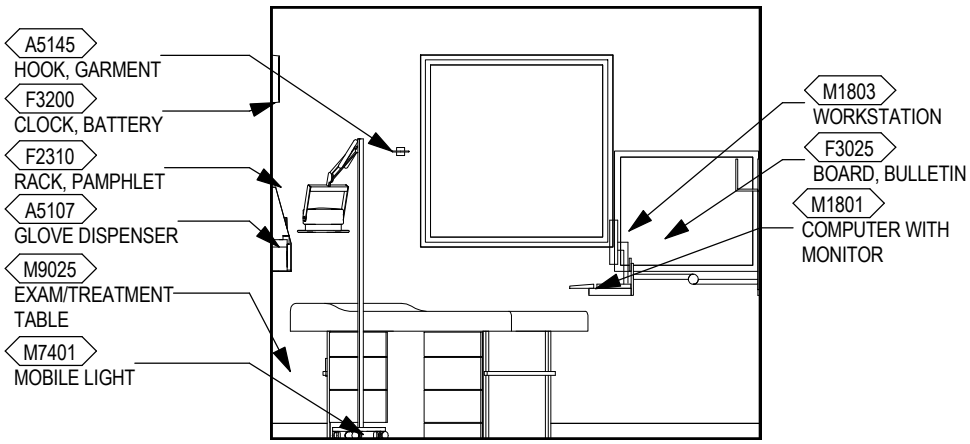

ELEVATION 2

U.S. Department of Veterans Affairs

CBOC, WRTM2, TELEHEALTH ROOM - ELEVATIONS

SKETCH TITLE

1/4" = 1'-0"

SCALE

Plot Date: 9/26/2017 1:44:53 PM

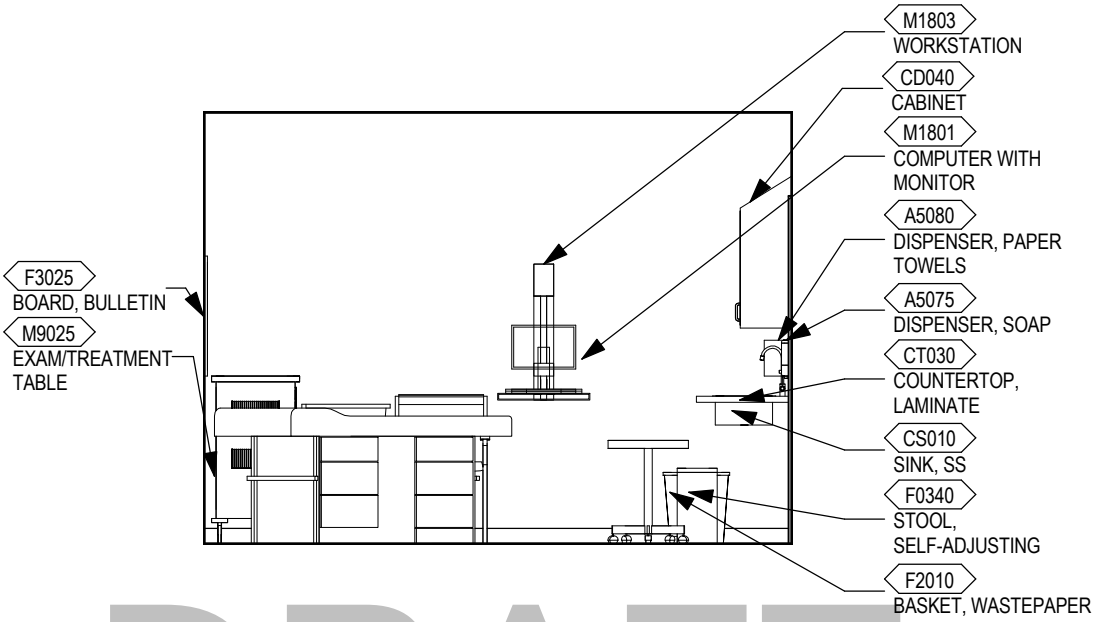

ELEVATION 3

DRAFT

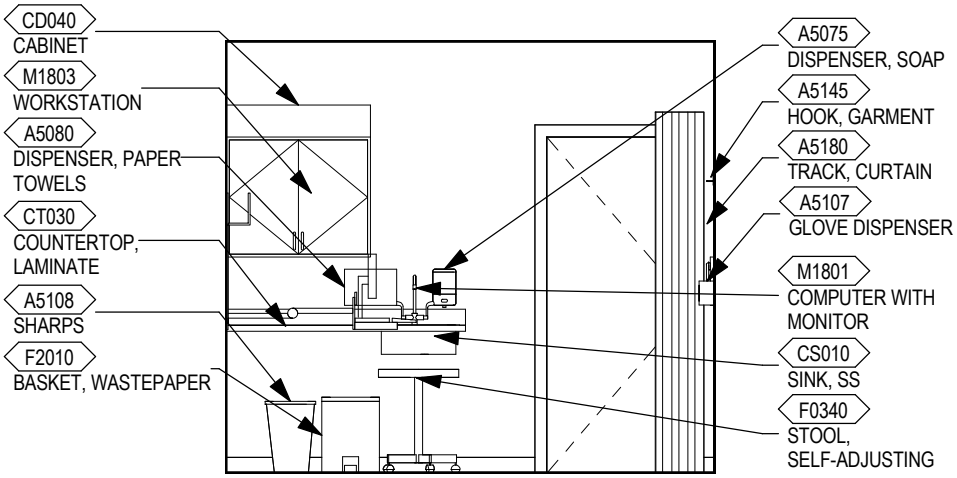

ELEVATION 4

U.S. Department of Veterans Affairs

CBOC, WRTM2, TELEHEALTH ROOM - AXON

SKETCH TITLE

Plot Date: 9/26/2017 1:44:53 PM

SCALE

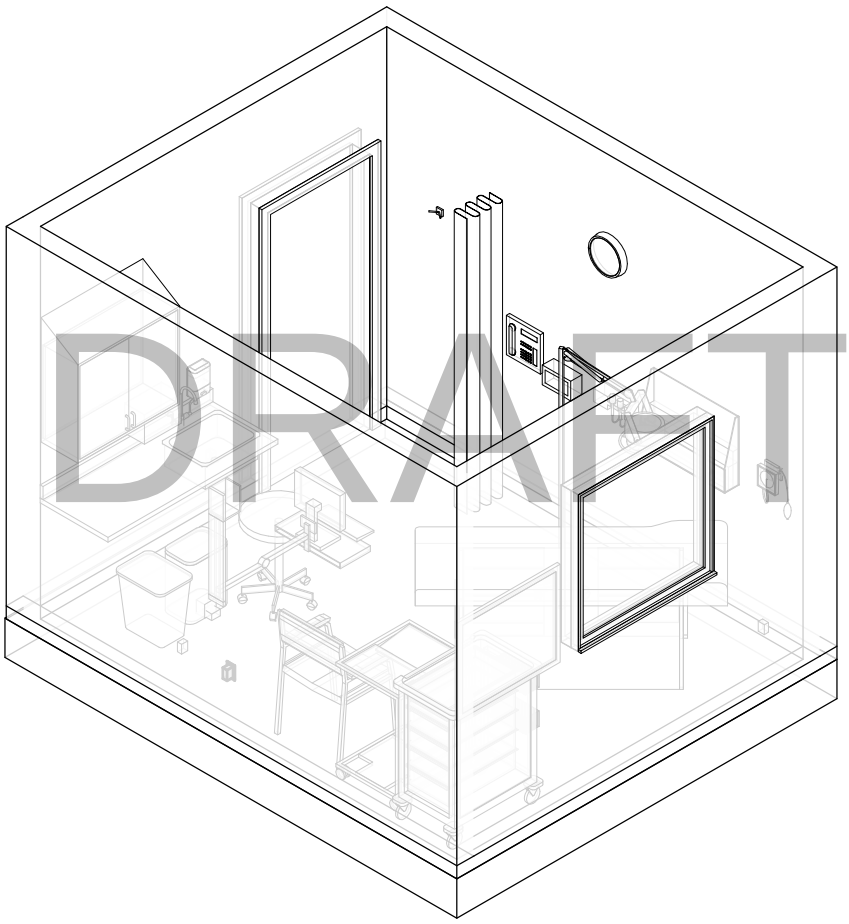

U.S. Department of Veterans Affairs

CBOC, WRTM2, TELEHEALTH ROOM-EQUIPMENT LIST

SKETCH TITLE

Plot Date: 9/26/2017 1:44:54 PM

SCALE

WRTM2, EQUIPMENT LIST		
JSN	EQUIPMENT NAME	Count
A5108	SHARPS	1
CS010	SINK, SS	1
CT030	COUNTERTOP, LAMINATE	1
E0948	CART, STORAGE	1
F0205	SIDE CHAIR	1
F0340	STOOL, SELF-ADJUSTING	1
F2010	BASKET, WASTEPAPER	1
M1801	COMPUTER WITH MONITOR	1
M3072	INFECTIOUS WASTE BAG	1
M7401	MOBILE LIGHT	1
M9025	EXAM/TREATMENT TABLE	1

DRAFT

U.S. Department of Veterans Affairs

CBOC, XDR01, GENERAL PURPOSE RADIOLOGY ROOM - PLAN

SKETCH TITLE

1/4" = 1'-0"

SCALE

Plot Date: 9/26/2017 1:44:55 PM

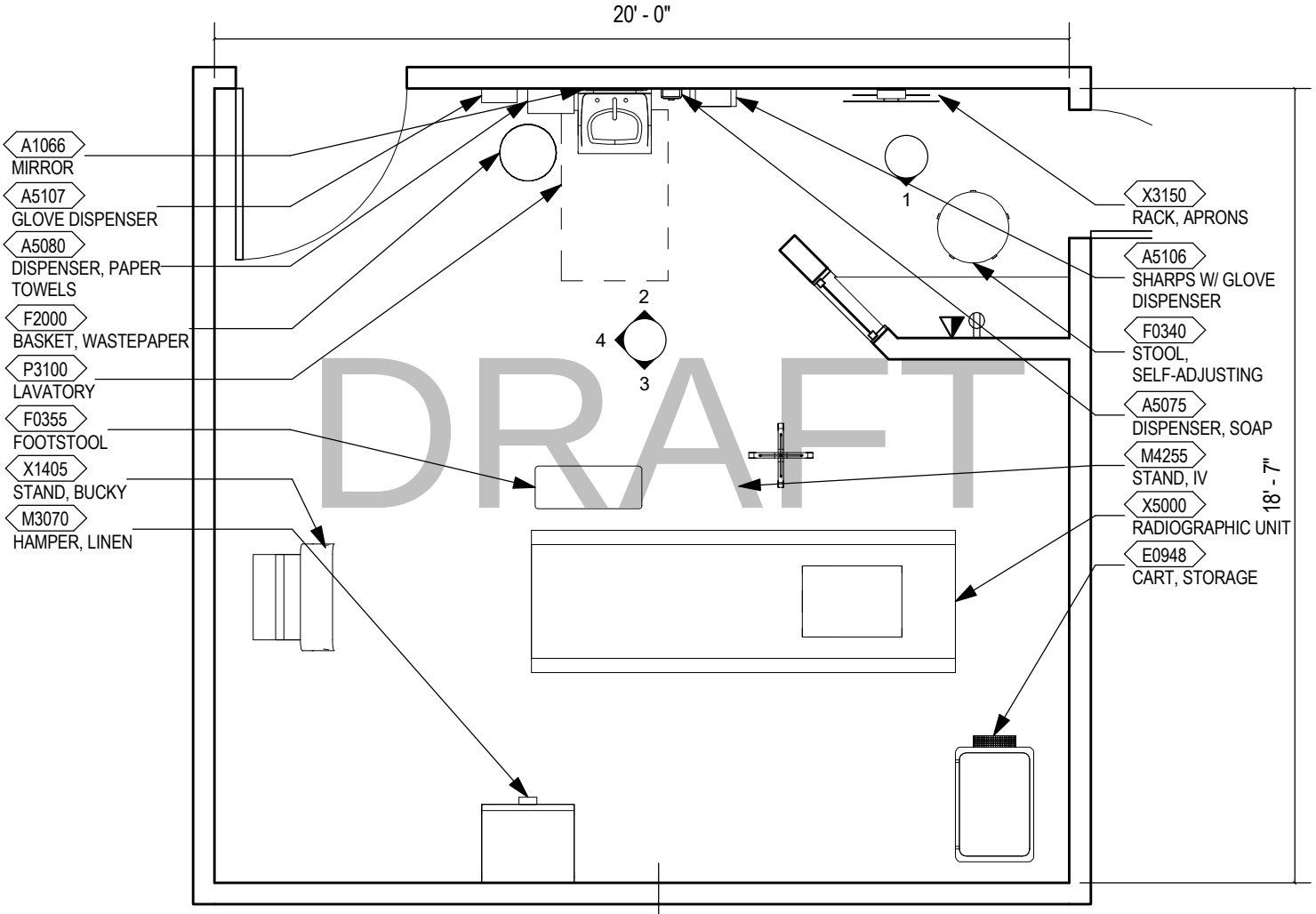

GENERAL PURPOSE RADIOLOGY ROOM

XDR01

367.85 SF

U.S. Department of Veterans Affairs

CBOC, XDR01, GENERAL PURPOSE RADIOLOGY ROOM - RCP

SKETCH TITLE

1/4" = 1'-0"

SCALE

Plot Date: 9/26/2017 1:44:55 PM

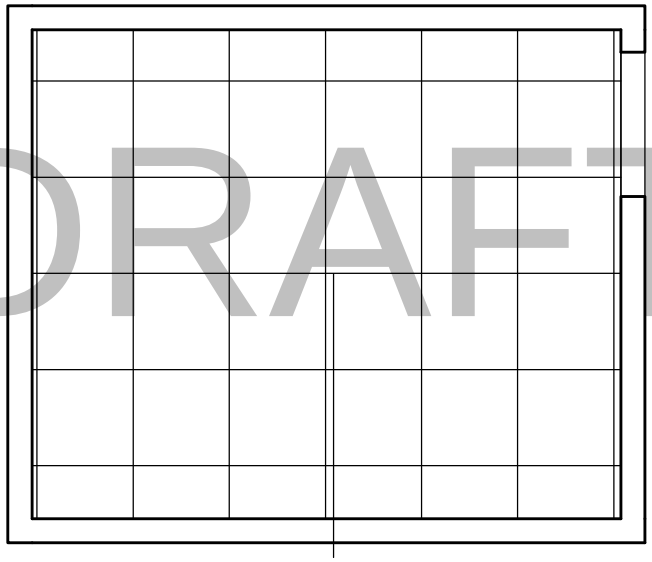

DRAFT

BIOFEEDBACK/NEUROPSYCH

OPMH3

124.54 SF

U.S. Department of Veterans Affairs

CBOC, XDR01, GENERAL PURPOSE RADIOLOGY ROOM - ELEVATIONS

SKETCH TITLE

1/4" = 1'-0"

SCALE

Plot Date: 9/26/2017 1:44:55 PM

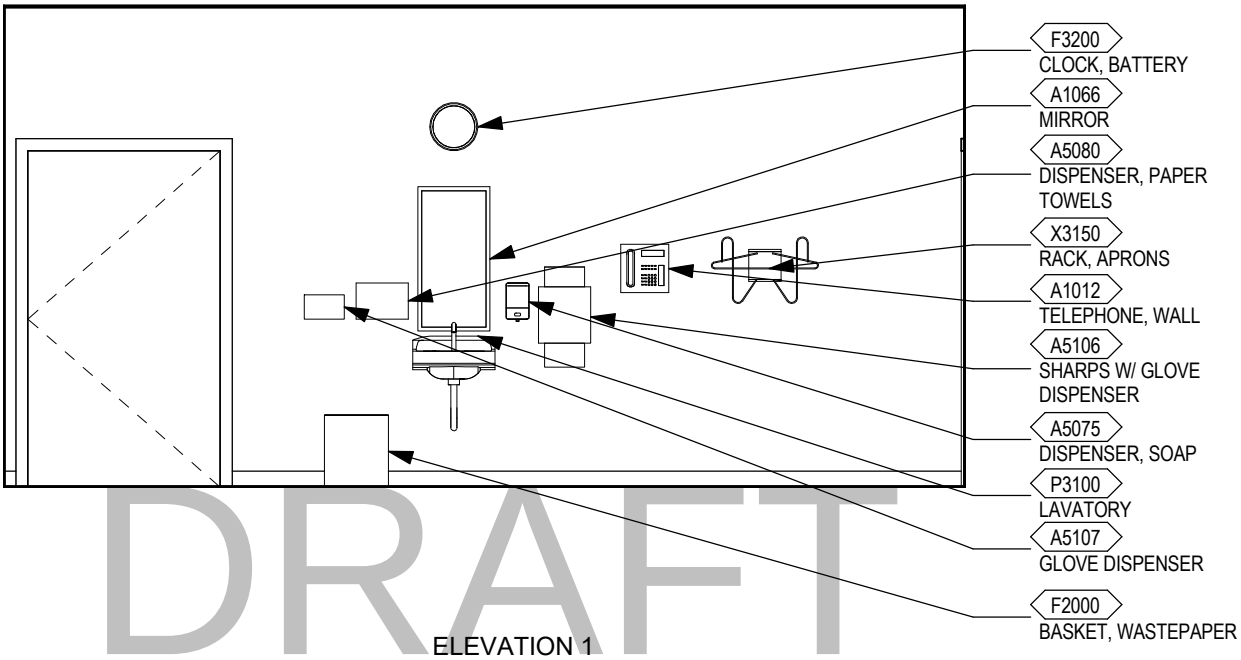

DRAFT

ELEVATION 1

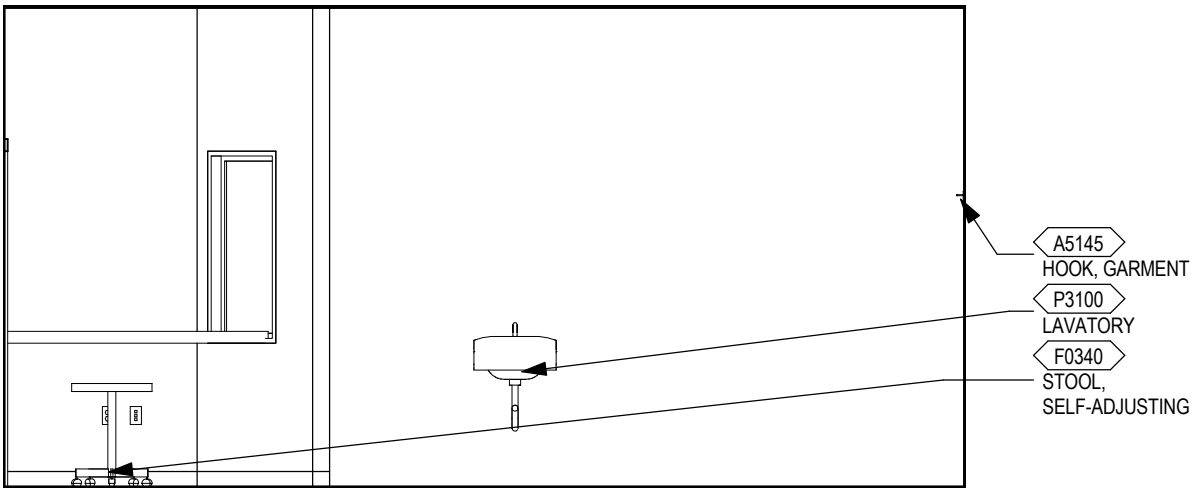

ELEVATION 2

U.S. Department of Veterans Affairs

CBOC, XDR01, GENERAL PURPOSE RADIOLOGY ROOM - ELEVATIONS

SKETCH TITLE

1/4" = 1'-0"

SCALE

Plot Date: 9/26/2017 1:44:56 PM

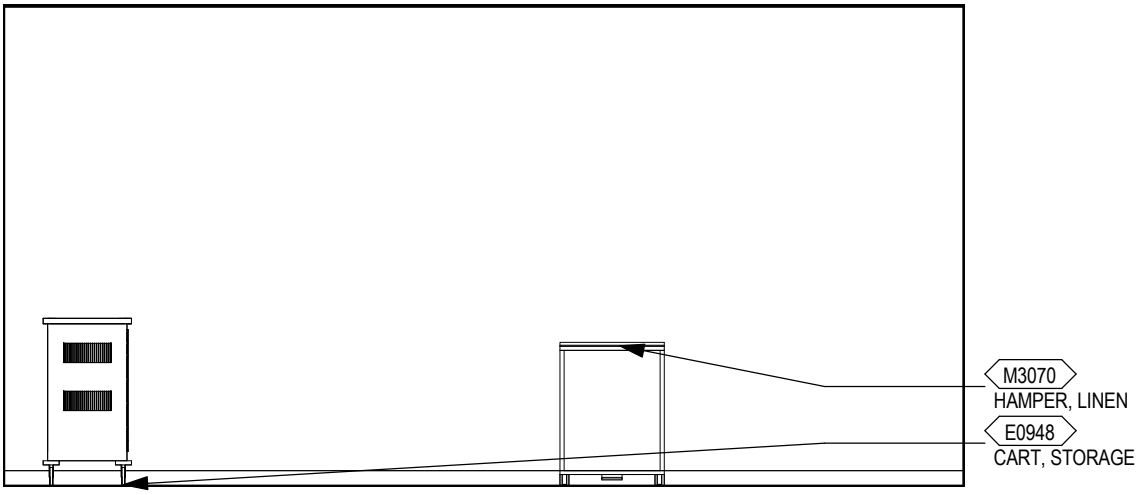

ELEVATION 3

DRAFT

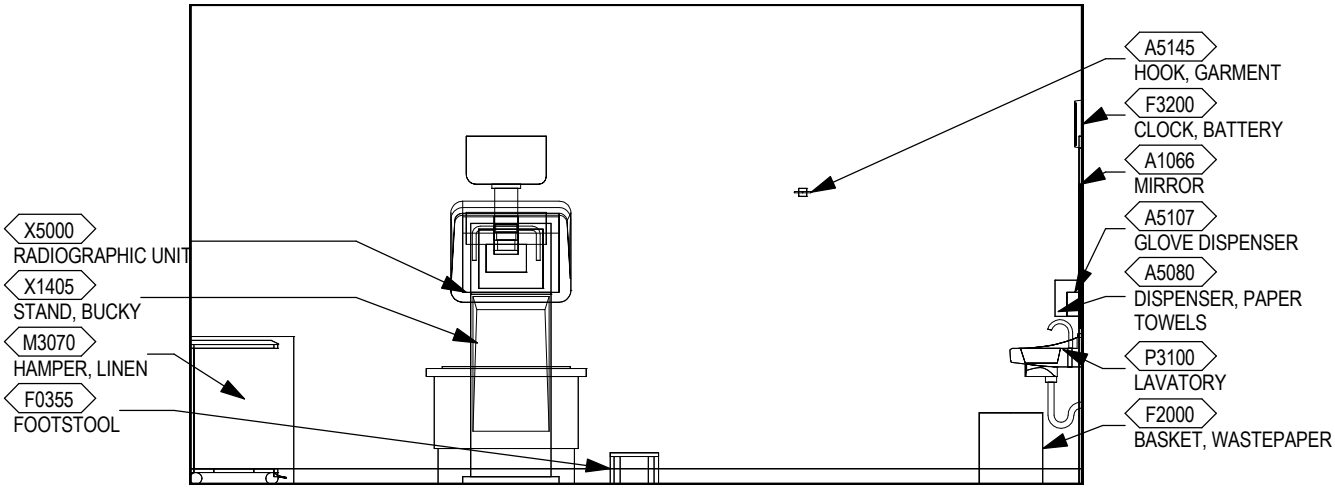

ELEVATION 4

U.S. Department of Veterans Affairs

CBOC, XDR01, GENERAL PURPOSE RADIOLOGY ROOM - AXON

SKETCH TITLE

Plot Date: 9/26/2017 1:44:57 PM

SCALE

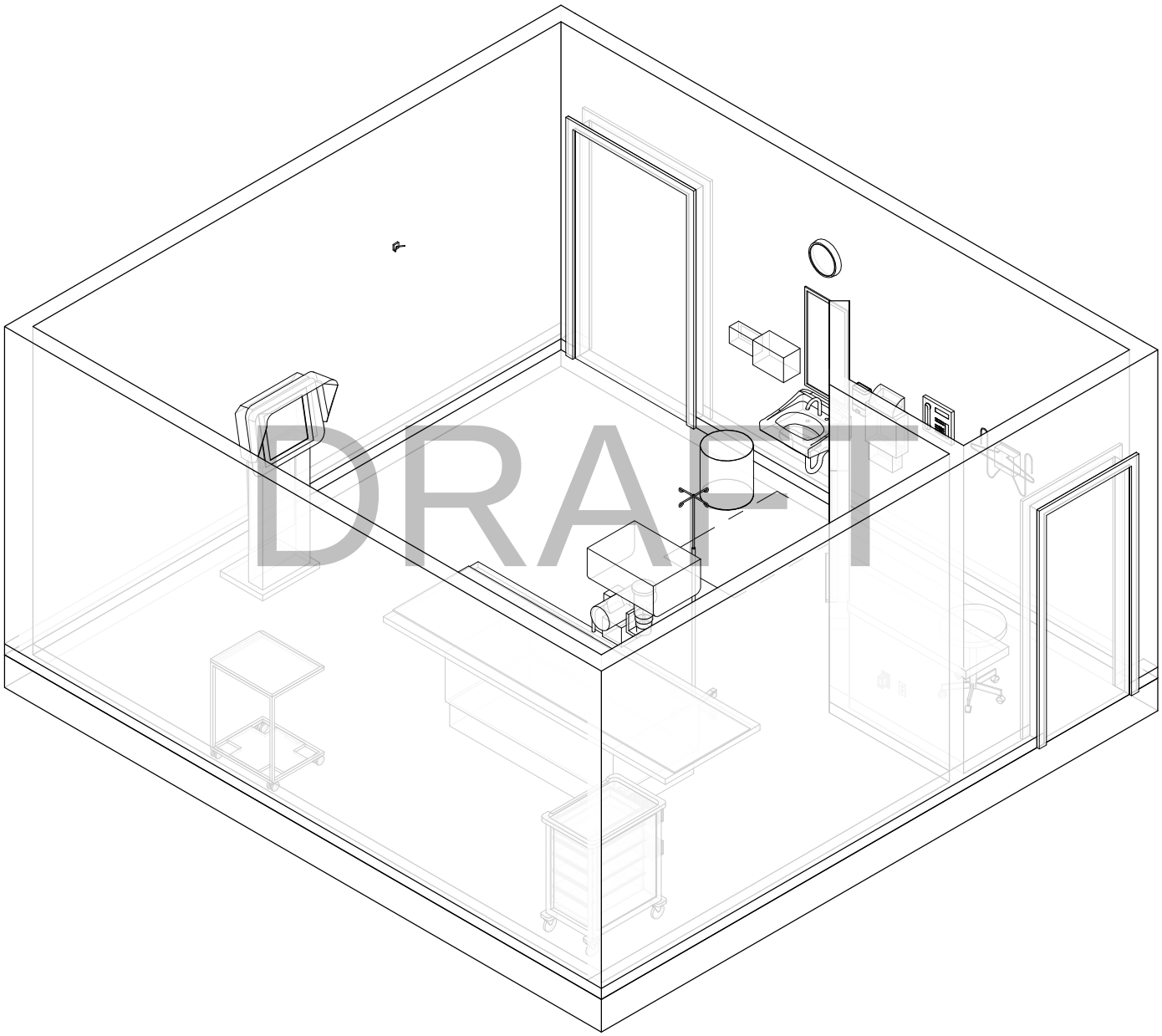

U.S. Department of Veterans Affairs

CBOC, XDR01, GENERAL PURPOSE RADIOLOGY ROOM - EQUIPMENT LIST

SKETCH TITLE

Plot Date: 9/26/2017 1:44:57 PM

SCALE

XDR01, EQUIPMENT LIST		
JSN	EQUIPMENT NAME	Count
A1066	MIRROR	1
E0948	CART, STORAGE	1
F0340	STOOL, SELF-ADJUSTING	1
F0355	FOOTSTOOL	1
M3070	HAMPER, LINEN	1
M4255	STAND, IV	1
P3100	LAVATORY	1
X1405	STAND, BUCKY	1
X3150	RACK, APRONS	1

DRAFT