VA

U.S. Department of Veterans Affairs

Office of Construction & Facilities Management

Plumbing design manual

NOVEMBER 2014

Rev May 1, 2018

TABLE OF CONTENTS

TABLE OF CONTENTS i
1 GENERAL REQUIREMENTS 1
1.1 PURPOSE 1
1.2 RESPONSIBILITY 1
1.3 SUSTAINABLE DESIGN 2
1.4 COMMISSIONING 2
1.5 METERING 2
1.6 NATIONAL CODES AND STANDARDS 2
1.7 VA HOSPITAL BUILDING SYSTEM 3
1.8 VA DESIGN STANDARDS 3
1.8.1 Master Construction Specifications (PG-18-1) 3
1.8.2 Design and Construction Procedures (PG-18-3) 3
1.8.3 Standard Details and CAD Standards (PG-18-4) 3
1.8.4 Equipment Guide List (PG-18-5) 4
1.8.5 Design Manuals (PG-18-10) 4
1.8.6 Design Guides (PG-18-12) 4
1.8.7 Barrier Free Design Standard (PG-18-13) 4
1.8.8 Design Submission Requirements (PG-18-15) 4
1.8.9 Design and Standards Alerts 4
1.8.10 VA Building Information Modeling (BIM) Guide 5
1.8.11 Seismic Design Requirements (H-18-8) 5
1.8.12 Signage Design Manual 5
1.8.13 Cultural Resource Management Procedures (H-7545) 5
1.9 ADDITIONAL DESIGN CRITERIA AND STANDARDS 5
1.9.1 National Fire Protection Association (NFPA) 5
1.9.2 Centers for Disease Control and Prevention Biosafety in Microbiological and Biomedical Laboratories (CDC BMBL) 5
1.9.3 Implementing Instructions: Federal Agency Implementation of Water Efficiency and Management Provisions 5
1.9.4 Architectural Barriers Act Accessibility Standards (ABAAS) 5
1.9.5 Sustainability and Historic Federal Buildings 6
1.9.6 National Environmental Policy Act (NEPA) 6
1.9.7 National Historic Preservation Act (NHPA) and related standards 6
1.10 COORDINATION 6
1.11 LOCAL CODES AND REQUIREMENTS 6
1.11.1 Local Utility Providers 7
1.12 PROJECT SPECIFIC REQUIREMENTS AND INFORMATION 7
1.12.1 VA Provided Materials 7
1.12.2 Proprietary Items 7
1.12.3 Computer Aided Facilities Management Requirements (CAFM) 7
2 PLUMBING DESIGN CRITERIA 9
2.1 TEST PRIOR TO DESIGN 9

2.2 EQUIPMENT PADS ... 9
2.3 PIPING ... 9
2.4 PIPE SUPPORT DESIGN ... 9
2.5 BASE AND VIBRATION ISOLATORS ... 9
2.6 FREEZE CONDITIONS ... 10
2.7 SEISMIC REQUIREMENTS ... 10
2.8 CONTRACT DRAWINGS ... 10
2.8.1 General ... 10
2.8.2 Basic Design Parameters ... 10
2.8.3 Plumbing Fixture Numbers ... 11
2.8.4 Symbols and Abbreviations ... 11
2.8.5 Cross Sections ... 12
2.8.6 Stack and Riser Diagrams ... 12
2.8.7 Equipment Schedules ... 12
2.9 INTERDISCIPLINE COORDINATION ... 12
2.10 CALCULATIONS AND REVIEW SUBMITTALS ... 13
3 PLUMBING FIXTURES, FAUCETS, FITTINGS AND EQUIPMENT ... 14
3.1 PLUMBING FIXTURES ... 14
3.1.1 General ... 14
3.1.2 Bariatric Plumbing Fixtures ... 16
3.2 SPECIAL EQUIPMENT ... 16
3.2.1 Dialysis Machines ... 16
3.2.2 Heart and Lung Machines ... 16
3.2.3 Distilled Water Stills ... 16
3.2.4 Sterilizers ... 17
3.2.5 Film Processing Areas ... 17
3.2.6 Chemical Fume Hoods ... 17
3.2.7 Kitchen Equipment ... 17
3.2.8 Trash Room/Loading Dock ... 17
3.3 ELECTRIC WATER COOLERS ... 17
3.4 REDUCED-PRESSURE BACKFLOW PREVENTERS ... 18
3.5 PLUMBING FIXTURE SCHEDULE ... 18
4 WATER SUPPLY AND DISTRIBUTION ... 21
4.1 GENERAL ... 21
4.2 DOMESTIC HOT WATER SYSTEMS ... 21
4.2.1 Water Heater Efficiency ... 22
4.2.2 Water Heaters for Patient Care and Research Buildings ... 22
4.2.2.1 Instantaneous and Semi-Instantaneous Water Heaters ... 23
4.2.2.2 Tank-Type Water Heaters ... 23
4.2.2.3 Dietetic Equipment ... 23
4.2.2.4 Booster Heaters ... 23
4.2.3 Water Heaters for Non-Patient Care Buildings ... 24
4.2.4 Instantaneous Tankless Water Heaters (Point of Use) ... 24

4.2.5 Sizing of Water Heaters ... 24
4.2.6 Thermostatic Mixing Valves ... 24
4.2.7 Hot-Water Recirculation Loops and Return Piping ... 25
4.2.8 Shut-Off and Balancing Valves ... 26
4.2.9 Heat Traps ... 26
4.3 DEVICE CALIBRATION ... 27
4.4 GENERAL PIPING DESIGN GUIDELINES ... 27
4.4.1 Definitions ... 27
4.4.2 Requirements for Piping Systems ... 27
4.5 LEGIONELLA MITIGATION IN VA FACILITIES ... 29
4.5.1 Purpose ... 29
4.5.2 Background ... 29
4.5.3 Piping Design Guidelines for Legionella Mitigation ... 31
4.5.4 Supplemental Water Disinfection Methods ... 31
4.5.5 Emergency Water Disinfection Methods ... 33
4.5.5.1 Thermal Eradication ... 33
4.5.5.2 Shock Chlorination ... 33
4.5.6 Special Use Water Systems (e.g., hemodialysis, laboratory, pharmacy compounding) ... 33
4.6 INSPECTIONS AND WITNESS OF TESTS ... 34
4.7 WATER DISTRIBUTION SYSTEMS ... 34
4.7.1 Metering for Use ... 34
4.7.2 Measuring and Indicating Devices ... 35
4.7.3 Water Hammer Arrestors ... 35
4.7.4 Trap Primers ... 35
4.8 WALL HYDRANTS ... 36
4.9 COORDINATION ... 36
4.10 BACKFLOW PREVENTERS ... 36
4.10.1 Reduced Pressure Backflow Preventers ... 36
4.10.2 Atmospheric Vacuum Breakers ... 36
4.10.3 Hose Connection Vacuum Breakers ... 37
4.10.4 Fire Sprinkler Systems and Standpipes ... 37
4.11 PRESSURE-REDUCING VALVES ... 37
4.12 DOMESTIC WATER BOOSTER SYSTEMS ... 37
4.12.1 Minimum Pressure ... 37
4.12.2 Patient Care Buildings ... 38
4.12.3 Non-Patient Care Buildings ... 38
4.13 SOLAR DOMESTIC WATER HEATING ... 38
4.13.1 Basic Solar System Design ... 39
4.13.2 Simple System Calculation ... 40
5 SANITARY DRAINAGE SYSTEMS ... 41
5.1 SANITARY DRAINAGE ... 41
5.1.1 Pipe Design ... 41

5.1.2 Floor Drains ... 41
5.1.3 Fixture Units ... 41
5.1.4 Sanitary Connections ... 41
5.1.5 Fats, Oil, and Grease (FOG) Removal Systems ... 42
5.1.6 Dialysis Sanitary Drains ... 42
5.1.7 Waste Neutralization Systems ... 42
5.1.8 Chemical-Resistant Piping ... 43
5.1.9 Cast Iron Piping ... 43
5.1.10 Cleanouts ... 43
5.1.11 Waste and Vent Systems ... 43
5.2 GRAY WATER RECYCLING SYSTEM ... 44
5.3 SCHEDULE OF FLOOR DRAINS ... 44
6 BUILDING STORM DRAINAGE SYSTEMS ... 50
6.1 STORM SYSTEM DRAINAGE ... 50
6.2 ROOF DRAIN LEADER INSULATION ... 50
6.3 CALCULATIONS ... 50
6.4 STORM CONNECTIONS ... 50
6.5 SCHEDULE OF AREA/ROOF DRAINS ... 50
6.6 LOCATION OF DRAIN LEADERS ... 50
6.7 UNDERSLAB AND FOUNDATION DRAINAGE ... 50
6.8 RAIN WATER HARVESTING SYSTEM ... 50
7 SPECIALTY TRAPS, INTERCEPTORS, AND SEPARATORS ... 52
7.1 SAND/GRIT TRAPS ... 52
7.2 OIL/WATER INTERCEPTORS ... 52
7.3 GREASE INTERCEPTORS ... 52
7.4 PLASTER TRAPS/INTERCEPTORS ... 52
7.5 CONTAMINATED WATER AND SANITARY WATER RETENTION ... 52
8 MEDICAL GASES AND VACUUM ... 54
8.1 GENERAL ... 54
8.1.1 Water Cooled Equipment ... 54
8.1.2 Renovation Projects ... 54
8.2 MEDICAL GAS AND VACUUM SYSTEMS ... 54
8.2.1 Oxygen, Medical Compressed Air, Medical Vacuum, Nitrous Oxide, Nitrogen Systems, Carbon Dioxide, Waste Anesthesia Gas Disposal and Instrument Air ... 54
8.2.2 Central Supply Systems ... 54
8.2.2.1 Sizing the Systems ... 55
8.2.2.2 System Setup ... 55
8.2.3 Piping Systems ... 57
8.2.4 Alarms ... 58
8.2.5 Connections to Existing Medical Gas Systems ... 59
8.3 LABORATORY GAS AND VACUUM SYSTEMS FOR RESEARCH AND MEDICAL LABORATORIES ... 60

8.3.1 Central Supply Systems ... 60
8.3.2 Piping Systems ... 62
8.3.3 Alarms ... 62
8.4 ORAL EVACUATION SYSTEM ... 63
8.4.1 High Volume Oral Evacuation (HVE) - General ... 63
8.4.2 Airflow and Vacuum Requirements ... 63
8.4.3 Vacuum Relief Valves ... 63
8.4.4 High Volume Oral Evacuation (HVE) Systems ... 63
8.5 DENTAL COMPRESSED AIR SYSTEMS ... 65
8.5.1 Dental Compressed Air Systems and Equipment ... 65
8.5.2 Central Supply System Pressure Requirements ... 65
8.5.3 Piping Systems ... 66
8.5.4 Dental Air System Demand ... 66
8.5.4.1 Dental Treatment Room Equipment ... 66
8.5.4.2 Prosthetics Laboratory ... 67
8.5.4.3 Standard Dental Air Demand ... 68
8.6 DESIGN FOR DENTAL UNIT WATER LINES ... 68
9 FUEL GAS SYSTEMS ... 69
9.1 INTERIOR FUEL GAS SYSTEMS ... 69
10 SPECIALTY SYSTEMS ... 70
10.1 PLUMBING FOR BIOLOGICAL SAFETY LEVEL 3 LABORATORIES ... 70
10.2 LABORATORY WATER SYSTEMS ... 70
10.3 PLUMBING FOR ANIMAL CARE (VIVARIUM) FACILITIES ... 71
10.4 HEMODIALYSIS WATER DISTRIBUTION SYSTEM DESIGN ... 71
10.4.1 General ... 71
10.4.2 Hemodialysis Water Treatment System Description ... 72
10.4.3 Hemodialysis Water Treatment Monitoring System ... 72
10.5 PHARMACY PLUMBING REQUIREMENTS ... 73
10.6 STERILE PROCESSING (SPS) ... 73
10.7 SILVER RECOVERY SYSTEM ... 73
10.7.1 Automatic Film Processor ... 73
10.7.2 Silver Recovery Equipment ... 73
10.7.3 Pipe Stub ... 74
10.8 SHOP COMPRESSED AIR SYSTEM ... 74
10.9 THERAPEUTIC POOL EQUIPMENT ... 74
10.9.1 Water Treatment System ... 74
10.9.2 Pipes and Equipment ... 74
10.9.3 Filter ... 74
10.9.4 Water Heater ... 74
10.9.5 Disinfection ... 74
10.9.6 pH Balancing ... 74
10.9.7 Recirculating Pump ... 74
10.9.8 Equipment Room ... 74

10.9.9 Vacuum Cleaning Equipment ... 75
10.10 LAUNDRY ... 75
10.10.1 Laundry Equipment ... 75
10.10.2 Floor Sinks and Floor Drains ... 75
10.10.3 Dedicated Sump ... 75
10.11 WATER SOFTENING SYSTEM ... 75
10.11.1 Softener ... 75
10.11.2 When Required ... 75
10.11.3 Salt Storage ... 76
10.11.4 Dealkalizing Equipment ... 76
10.11.5 Dealkalizer Tank ... 76
10.11.6 Brine and Caustic Soda Tanks ... 76
10.11.7 Miscellaneous ... 76
10.12 REAGENT GRADE WATER SYSTEMS ... 76
10.12.1 Floor Space for Central Reagent Grade Equipment ... 76
10.12.2 Floor Space for Regenerant Chemicals ... 76
10.12.3 Emergency Shower and Eye/Face Wash ... 76
10.12.4 Negative Pressure Ventilation ... 76
10.12.5 Chemical-Resistant Piping and Drains ... 77
10.13 PLUMBING FOR PARKING STRUCTURES ... 77
10.13.1 Water Distribution Systems ... 77
10.13.2 Storm Drainage Systems ... 77
APPENDIX 11-A: VA HOSPITAL BUILDING SYSTEM ... 78
11-A.1 DESCRIPTION OF MODULES ... 78
11-A.1.1 Introduction ... 78
11-A.1.2 Structural Bays ... 78
11-A.1.3 Service Zones ... 78
11-A.1.4 Functional Zones ... 78
11-A.1.5 Fire Compartmentation ... 78
11-A.1.6 Plumbing Utilities ... 78
11-A.2 ZONING OF PLUMBING SYSTEMS ... 78
11-A.3 REFERENCES ... 79
APPENDIX 11-B: COMPUTER AIDED FACILITIES MANAGEMENT (CAFM) ... 80
11-B.1 CAFM AND EQUIPMENT SCHEDULE UTILIZATION ... 80
11-B.1.1 Introduction ... 80
11-B.1.2 Submission Requirements ... 80
11-B.1.3 Electronic Documentation ... 80
11-B.1.4 Schedules ... 80
APPENDIX 11-C: A/E SUBMISSION REQUIREMENTS AND PLUMBING DESIGN MANUAL COORDINATION ... 82
11-C.1 GENERAL ... 82
11-C.1.1 Introduction ... 82
11-C.1.2 Coordination ... 82

11-C.1.3 Compliance Requirements 82
11-C.1.4 BIM Requirements 82
11-C.1.5 Specific Drawing Requirements 82
11-C.1.6 Equipment Schedules 83
11-C.1.7 Schematic Design Level 1 (SD1) Submission Requirements 84
11-C.1.8 Schematic Design Level 2 (SD2) Submission Requirements 85
11-C.1.9 Design Development Level 1 (DD1) Submission Requirements 85
11-C.1.10 Design Development Level 2 (DD2) Submission Requirements 86
11-C.1.11 Construction Document Level 1 (CD1) Submission Requirements 86
APPENDIX 11-D: SCHEMATIC DIAGRAMS 88
APPENDIX 11-E: SERVICE PIPE SCHEDULE 94
11-E.1 PIPE SERVICE, MATERIAL, FITTINGS AND JOINTS 94

1 GENERAL REQUIREMENTS

1.1 PURPOSE

This manual is a directive for Architecture and Engineering design professionals (hereafter referred to as A/E or designer) for the planning and design of the drainage, waste, vent, water distribution, storm drainage, natural gas and fuel gas, medical gas, medical vacuum, and specialty systems at Department of Veterans Affairs (VA) facilities. VA facilities have a wide range of occupants including patients, employees, volunteers, and visitors. An important mission of VA is to provide healthcare to Veterans who, in some cases, have severe disabilities, including sight, hearing, and mobility. The A/E must always keep the interest of the sick and/or disabled Veteran in mind when making decisions in locations where design choices affect Veterans.

This design manual shall be utilized for all VA projects, including major, minor, and NRM projects. It is expected that systems designed shall meet their primary intent of providing a sanitary, safe, reliable, and sustainable facility. In order to provide the latitude needed to accommodate new technologies, methods and materials, and/or pre-existing field conditions, technical deviations from the stipulations of this manual may be made only if a safe, reliable, and sustainable design shall result. Such deviations must be approved by VA Authorities. Unless otherwise directed by VA, the Authority Having Jurisdiction is the VA Project Manager and/or the local VA Medical Center. Deviations that are not permitted are requirements included in public laws, federal regulations, Executive Orders, and all applicable codes. Deviations from Section 4.5 *Legionella* Mitigation in VA Facilities shall be approved by the Facility Water Safety Committee. This manual is intended for use by the A/E and others engaged in the design and renovation of VA facilities. These facilities include but are not limited to:

- Acute Care
- Ambulatory Care Centers
- Animal Research Facilities
- Clinical Additions
- Community-Based Outpatient Clinic (CBOC)
- Community Living Centers (CLC)
- Domiciliary
- Drug/Alcohol Rehabilitation
- New Hospitals
- Energy Centers
- Laundries
- Laboratory Buildings
- Medical Research
- Mental Health - Inpatient
- Outpatient Clinics
- Parking Structures
- Psychiatric Care Facility
- Rehabilitation Medicine
- Rehabilitation/Prosthetics
- Replacement Hospitals
- VBA Offices
- Warehouses

1.2 RESPONSIBILITY

The A/E shall provide all necessary professional services to perform planning and design of the systems for the project. The A/E is responsible and liable for the professional design in

accordance with the contract, good engineering practices, VA standards, VA project-specific requirements (if any), and applicable codes.

1.3 SUSTAINABLE DESIGN

VA's design and construction program is required to comply with numerous federal mandates, Executive Orders, and VA policies related to energy efficiency, renewable energy, water conservation, and other sustainability requirements. Refer to Construction and Facilities Management's (CFM's) Technical Information Library (TIL) for details of VA's Sustainable Design Program which includes VA Policies, Handbooks, and Design Guidance. Sustainability Goals shall be established by the Integrated Design Team (VA and A/E). Overarching goals may be directed solely by the VA.

1.4 COMMISSIONING

The scope of work shall include Total Building Commissioning in accordance with the Whole Building Commissioning Process Manual and Specification published by CFM and posted in the VA Technical Information Library (TIL) http://www.cfm.va.gov/til/.

1.5 METERING

Install building level utility meters in new major construction and renovation projects to track and continuously optimize performance to measure consumption of potable water, gas, steam, electricity, and thermal energy in federal buildings and other facilities and grounds. Metering systems should be coordinated with the VA facility and the VA national metering reporting system. Meters shall be installed in accordance with the VA Sustainable Design Manual.

Metering requirements should be included in all Energy Savings Performance Contracts (ESPC) and Utility Energy Service Contracts (UESC), as appropriate.

1.6 NATIONAL CODES AND STANDARDS

The International Plumbing Code (IPC), National Fire Protection Association (NFPA) 54 (National Fuel Gas Code), and NFPA 99 (Health Care Facilities Code), American Society of Heating Refrigeration and Air Conditioning Engineers (ASHRAE) 90.1-2013 (Energy Standard for Building Except Low-Rise Residential Buildings) and ASHRAE Handbook HVAC Applications, and the American Society of Plumbing Engineers (ASPE) Data Books are the major referenced standards used in the Plumbing Design Manual. Most of these references are available to VA employees on the CEOSH website (http://vaww.ceosh.med.va.gov/) accessible via the VA intranet or can be obtained from the following sources:

- The latest IPC can be obtained from the International Code Council, 5203 Leesburg Pike, Suite 600; Falls Church, VA, 22041, http://www.iccsafe.org.
- The latest NFPA 54 and NFPA 99 can be obtained from National Fire Protection Association, 1 Battery March Park, Quincy, MA 02269, http://www.nfpa.org.
- The latest ASHRAE Standards and Guidelines can be obtained at https://www.ashrae.org/.
- The latest ASPE Data Book can be obtained at http://www.aspe.org.

Unless specifically stated otherwise, the latest edition adopted by the VA shall be used.

Additionally, Chapter 13 of the IPC lists standards that are referenced in various sections of the IPC and VA Master Plumbing Specifications. These references are also given in the text of this manual where appropriate.

1.7 VA HOSPITAL BUILDING SYSTEM

The VA Hospital Building System (VAHBS) is a methodology based on a modular concept for planning, designing, and constructing hospitals.

Due to the modular concept of the VA Hospital Building System and the Guiding Principle of Integrated Design, the A/E will find that plumbing schematic/design development decisions occur much earlier in the overall planning/design process when compared to a conventional design process. Equipment selection and main distribution sizing should be evaluated as soon as the size and number of modules is determined.

The methodology has been successfully used nationwide for capital and operating cost containment, shortened delivery schedules, and improved space utilization flexibility. All new and replacement VA hospital buildings shall use the VAHBS system. This system is also recommended for major additions to existing hospitals where future adaptability is an important factor.

See VHA Program Guide PG-18-3, Design and Construction Procedures, Topic 3, VA Hospital Building System for further guidance. The complete reference for the VAHBS is contained in the 1976 Development Study (called the Redbook) and the 2006 Supplement. Additional details are included in Appendix 11-A.

1.8 VA DESIGN STANDARDS

VA standards are described in this section. All the manuals, guides, details, lists, requirements and references in this section are found on the CFM TIL at http://www.cfm.va.gov/til/ unless otherwise noted. The key VA Design Standards concerning plumbing system design are listed below.

1.8.1 Master Construction Specifications (PG-18-1)

This reference defines a standardized specification for the A/E to assure that the contractors provide equipment and systems that meet the design intent in terms of performance, quality, regulatory compliance, and cost.

1.8.2 Design and Construction Procedures (PG-18-3)

This reference establishes minimum consistent design/construction practices and references the VAHBS methodology.

1.8.3 Standard Details and CAD Standards (PG-18-4)

VA has adopted the U.S. National CAD Standard (NCS) Version 4, which is amended by the VHA National CAD Standard Application. A link to the NCS standards and the VHA National CAD Standard Application Guide is found on the TIL website.

Note: The A/E shall utilize VA Standard Details to the fullest extent possible. A modification to a Standard Detail requires the approval of VA Authorities.

1.8.4 Equipment Guide List (PG-18-5)

This is a reference for planning and development of equipment requirements for VA facilities.

1.8.5 Design Manuals (PG-18-10)

These standards are intended to convey general and specific design requirements for VA facilities.

- Fire Protection Design Manual: Provides the fire protection engineering design criteria for all categories of VA construction and renovation projects.
- Asbestos Abatement Design Manual: Serves as a guide for the planning and design of asbestos abatement projects location at VA facilities.
- Site Development Design Manual and Appendix: Provides planning and design of the site layout, storm water management, building location and orientation, site utilities, landscaping and irrigation.
- Physical Security Design Manual for VA Facilities: Provides physical security standards required for facilities to continue operation during a natural or manmade extreme event and for facilities that are required to protect the life safety of patients and staff in an emergency. Standards are provided in two separate manuals:
  - Mission Critical Facilities Design Manual
  - Life-Safety Protected Design Manual
- Cost Estimating: Provides general and specific VA cost estimating philosophies.
- Sustainable Design Manual: Covers sustainability-related requirements that all projects must comply with.
- Transport Systems (Elevators) Design Manual: Provides engineering design criteria for elevator systems.

1.8.6 Design Guides (PG-18-12)

Provides the designer with specific layout templates and medical equipment lists for all types of spaces/uses and specific design parameters for structural, electrical and mechanical design.

1.8.7 Barrier Free Design Standard (PG-18-13)

This supplement to Architectural Barriers Act Accessibility Standards (ABAAS) provides guidelines to better meet the barrier free needs of VA in its healthcare facilities.

1.8.8 Design Submission Requirements (PG-18-15)

These references provide a staged list of tasks in various design categories to define the A/E scope and assure thorough and timely completion of the final design package and bid documents.

1.8.9 Design and Standards Alerts

CFM uses Standards Alerts to notify designers of changes to design standards that have not yet been included in VA specifications and design manuals. Design Alerts are used to alert designers to important recommendation related to the design of VA facilities. Alerts can be found on CFM's TIL.

1.8.10 VA Building Information Modeling (BIM) Guide

VA has adopted BIM to achieve better quality documents for construction and to provide electronic data for facilities management.

1.8.11 Seismic Design Handbook (H-18-8)

This reference establishes code and other requirements, including occupancy categories, for new or existing VA facilities located in seismic areas so these facilities remain functionally operational after an earthquake.

1.8.12 Signage Design Manual

This reference provides guidelines for the design of signs and provides detailed information on the development of a signage system.

1.8.13 Cultural Resource Management Procedures (H-7545)

This handbook discusses requirements of cultural resource legal authorities outlined in VA Directive 7545, and elaborates on assignment of responsibilities.

1.9 ADDITIONAL DESIGN CRITERIA AND STANDARDS

There are several other federal and industry design references and standards that are applicable to VA projects. The standards, codes, and guides listed below are to be reviewed and incorporated on a project specific basis as determined by the project scope of work.

1.9.1 National Fire Protection Association (NFPA)

The National Fire Protection Association develops and publishes codes and standards intended to minimize the possibility and effects of fire and other risks (http://www.nfpa.org).

1.9.2 Centers for Disease Control and Prevention Biosafety in Microbiological and Biomedical Laboratories (CDC BMBL)

The latest CDC BMBL publication provides fundamentals of containment include the microbiological practices, safety equipment, and facility safeguards that protect laboratory workers, the environment, and the public from exposure to infectious microorganisms that are handled and stored in the laboratory. (http://www.cdc.gov/biosafety/publications/)

1.9.3 Implementing Instructions: Federal Agency Implementation of Water Efficiency and Management Provisions

This document provides instructions to federal agencies on implementation of the water use efficiency and management goals of section 2(d) of Executive Order 13514, federal Leadership in Environmental, Energy, and Economic Performance.
(http://www.whitehouse.gov/sites/default/files/water_implementing_instructions.pdf)

1.9.4 Architectural Barriers Act Accessibility Standards (ABAAS)

This document contains scoping and technical requirements for accessibility at federal sites and facilities by individuals with disabilities. These requirements are to be applied during the design, construction, additions to, and alteration of sites, facilities, buildings, and elements to the extent required by regulations issued by federal agencies under the *Americans with Disabilities Act of 1990* (ADA). ABAAS replaces the *Uniform Federal Accessibility Standards* (UFAS), which was VA's previous standard for accessibility.

1.9.5 Sustainability and Historic Federal Buildings

The goal of this guidance is to assist federal decision makers, usually capital asset managers, facility managers, and other program and project managers, in their considerations regarding sustainability and historic federal buildings. Decision makers will consider historic preservation outcomes; and to take advantage of opportunities for meeting historic preservation, energy efficiency, and sustainability goals together in the administration of federal buildings. (http://www.achp.gov/docs/SustainabilityAndHP.pdf)

1.9.6 National Environmental Policy Act (NEPA)

The National Environmental Policy Act (NEPA) requires federal agencies to integrate environmental values into their decision making processes by considering the environmental impacts of their proposed actions and reasonable alternatives to those actions.

To meet NEPA requirements federal agencies conduct environmental impact assessments during project planning. In some cases an agency prepares a detailed statement known as an Environmental Impact Statement (EIS). The results of NEPA analysis are integrated into planning and decision making, and often influence the design of projects. NEPA requirements must be addressed beginning at the earliest possible point in project planning; the A/E shall be tasked to provide VA with the data and expert advice needed to address these requirements.

1.9.7 National Historic Preservation Act (NHPA) and related standards

The National Historic Preservation Act (NHPA) and related laws, regulations and executive orders collectively require federal agencies to consider, where possible protect, and if feasible make productive use of historic buildings, structures, sites, landscapes, and other types of "cultural resource" (See VA Directive/Handbook 7545). Under regulations implementing Section 106 of the NHPA, agencies review and consult about the effects of their proposed actions on historic properties, and execute binding commitments that must be reflected in the design of projects. Detailed standards issued by the Secretary of the Interior (http://www.nps.gov/tps/standards.htm) influence the design of projects that modify historic buildings and structures. Like NEPA requirements, those of the NHPA and related authorities must be addressed beginning at the earliest possible point in project planning; the A/E is often tasked to provide VA with the data and expert advice needed to address them.

1.10 COORDINATION

The A/E shall coordinate all work to avoid design conflicts and eliminate potential change orders. Of particular focus, shall be concealed and underground areas and site utility coordination.

The A/E shall coordinate with federal, state, county, and local agencies to determine required permitting for the project and provide the VA Project Manager with a summary of the permit requirements, copies of permit applications and copies of correspondence, meeting minutes and other supporting documentation.

1.11 LOCAL CODES AND REQUIREMENTS

The A/E shall bring local and regional climatic and geographic conditions and provisions of local building codes that are significantly different from national codes and conditions to the attention of VA. Of particular focus, shall be local codes, code amendments, and/or conditions

related to coastal, hurricane-prone, arctic, seismically active regions, or other climatic or regional conditions that warrant additional measures to protect the integrity of systems.

1.11.1 Local Utility Providers

The A/E shall follow the rules and regulations of local utility companies, where applicable. The A/E shall investigate potential rebates, and other programs offered by local utility companies for the use of specific types of equipment and provide a detailed summary of potential savings to the VA Project Manager.

The A/E shall coordinate with local utility providers to verify the location, size and characteristics of existing utility mains and/or service lines available for connection to the proposed facility. The A/E shall forward to the VA Project Manager copies of correspondence, meeting minutes and applications for utility service from utility company representatives. The Facility Chief Engineer will negotiate for new services or changes to existing building services or changes to existing building services as necessary.

1.12 PROJECT SPECIFIC REQUIREMENTS AND INFORMATION

1.12.1 VA Provided Materials

The VA Project Manager or Facility Chief Engineer will provide the following data to the A/E:

- Facility Development Plan
- Building number assignments
- All existing drawings of the site, especially any utility plans.
- Design objectives
- Limitations
- Design criteria specific to the project
- Site requirements

1.12.2 Proprietary Items

The use of trade names or other indications that identify a product of an individual manufacturer on any project shall not be used under any circumstance, unless specifically approved by VA. Where VA authorizes specific products, etc., the following shall be identified:

- Where necessary to identify existing equipment,
- Where an existing system is to be extended and competitive manufacturers cannot meet performance or dimensional requirements,
- Where required by a public utility or municipal system as a condition of service. This shall be stated explicitly in the specifications.

1.12.3 Computer Aided Facilities Management Requirements (CAFM)

The VA intends to implement Computer Aided Facility Management (CAFM) systems in all new and replacement hospital construction, and as feasible in all existing hospitals. The CAFM concept requires that all pertinent data regarding a facility be contained in a master digital database, accessible by facilities personnel at their workstations for use in operations and maintenance, energy/cost management, and for planning modifications. The transfer of the

appropriate data shall be in the Construction Operations Building Information Exchange (COBie) format developed by the A/E and contractor.

---END OF CHAPTER---

2 PLUMBING DESIGN CRITERIA

2.1 TEST PRIOR TO DESIGN

During the schematic design stage, a testing agency shall be enlisted to conduct a water analysis test and a hydrant test of the two nearest water hydrants. At a minimum, the test shall include static and residual pressures, and a water quality analysis including pH, bacterial count, residual chlorine, total hardness as CaCO3, total dissolved solids, and alkalinity. This water quality report shall also identify recommended water treatment design concepts for specialized demands such as building humidification, steam cooking, dialysis and laboratory water, boiler feedwater and cooling tower makeup and other specific project needs. The water quality report shall be issued on the A/E or testing company's letterhead.

2.2 EQUIPMENT PADS

All floor-mounted equipment shall be placed on concrete housekeeping pads. Maintenance workers shall have access to all controls, electrical panels, valves, and instrumentation. Coordinate details of pad construction (reinforcement, dimensions, and seismic requirements) with the structural engineer and VA Standards.

2.3 PIPING

Plumbing over operating rooms; food preparation areas, (serving and storage areas); and electrical rooms containing main distribution panels or motor control centers shall be avoided. Piping over such areas can be made only after approval from the medical center or VA Project Manager. When piping is necessary in these areas, indicate leakage protection, such as drain pans on drawings and in specifications.

Plumbing riser or stack floor (not floor drains) penetration sleeves shall extend 50 mm [2 inches] above the floor and 1 inch [25 mm] below the floor and include a built-in water stop and appropriate seal. All penetrations through fire and smoke barriers and floor/ceiling assemblies shall be protected according to the latest edition of the International Building Code (IBC).

2.4 PIPE SUPPORT DESIGN

The designer shall be responsible for the design of the plumbing support system so as to prevent strains and stresses that might result in a failure of the system. The contract documents shall indicate all supports and other provisions designed to protect piping from damage resulting from expansion, contraction, structural settlement piping movement, building movement, seismic event, etc.

2.5 BASE AND VIBRATION ISOLATORS

Equipment subject to movement must be isolated to prevent the transmission of vibrations to the building structure. See VA Master Specification 23 05 41, Noise and Vibration Control for HVAC Piping and Equipment for requirements.

2.6 FREEZE CONDITIONS

Where the project is subject to freeze conditions, the designer shall make provisions to protect pipes placed outside of the building, in attics and crawl spaces, or concealed in outside walls with insulation or heat tracing or by means of a frost proof spigot.

Where a project is subject to freeze conditions, vertical and horizontal overhead roof drain leaders shall be insulated to prevent condensation from damaging building finishes.

2.7 SEISMIC REQUIREMENTS

Earthquake-resistive design for plumbing equipment and piping shall comply with the requirements of VA Publication H-18-8, Seismic Design Requirements.

2.8 CONTRACT DRAWINGS

2.8.1 General

(a) Show plumbing work on drawings using a minimum scale of 1:100 [1/8” = 1’0”]. Enlarged plans and sections shall be indicated at a scale of 1:50 [1/4” = 1’0”].

(b) Plumbing design and plumbing seismic design shall only be indicated on “PL”-Series drawings (see VHA National CAD Standard Application Guide).

(c) Piping shall be shown on the same plan as the fixtures being served.

(d) Pipe sizes shall be indicated on both floor plan and riser diagrams.

(e) Identify rooms on plans with name and number.

(f) The following shall be indicated on the plumbing drawings:

i. Show drainage area in square feet [square meters] for each roof drain and totals for building at outside building wall.
ii. Show fixture unit count at base of each soil and waste stack and for each sanitary sewer at outside building wall.
iii. Show inverts elevations for all sewers at outside building wall.
iv. Show dimension from adjacent column line to sanitary and building service water at building entrance. These dimensions shall then be coordinated with site utilities.
v. Show centerline elevation for all pressure systems at outside building wall.
vi. Show floor elevation at each level. Show public sewer rim elevation of nearest upstream manhole.

2.8.2 Basic Design Parameters

The following systems when applicable shall be shown on the plumbing drawings:

- Domestic water, cold, hot, hot water return, cold water return.
- Laboratory water, cold, hot, hot water return, cold water return.
- Industrial water, cold, hot, hot water return, cold water return.
- Sewer/vent/waste inside buildings and within 5 feet [1.5 m] outside of the building.

- Neutralization and vent systems including connection to sanitary sewer.
- Roof drains and drain leaders.
- Reagent water, hemodialysis, and other pure water systems.
- Demineralization (sometimes called deionization water treatment)
- Natural gas.
- Medical gases.
- Medical vacuum.
- Compressed air.
- Dental air.
- Oral evacuation systems.
- Pool piping.
- Potable water treatment.
- Reverse Osmosis (RO) water treatment.
- Sub soil drainage (Coordinate with Civil for responsibility).
- Equipment pads.
- Seismic restraint systems.
- Rain water harvesting.
- Gray water harvesting.
- Solar water heating.
- Water disinfection.
- Emergency eyewash and shower.
- Legionella eradication/mitigation system.

2.8.3 Plumbing Fixture Numbers

Identify on the plumbing drawings all equipment requiring connections to the plumbing systems by appropriate symbol number (example, P-103); coordinate "P" number designations with specifications and drawings. Do not use the designation Not in Contract (N.I.C.) on the drawings.

2.8.4 Symbols and Abbreviations

VA has adopted many National CAD standards abbreviations as well as retained many older VA legacy abbreviations. In specifications and descriptive documents, when the first instance of an abbreviation occurs, the full phrase is written followed by the abbreviation in parentheses. Subsequent occurrences of the phrase will use the abbreviation.

On drawings, an index of abbreviations and symbols will be included on drawing PP-OXXX General Notes. A list of plumbing abbreviations and symbols can be found on the https://www.cfm.va.gov/TIL/ Technical Information Library under standard details. See DETAILS, PG-18-4.

2.8.5 Cross Sections

Due to the space requirements of plumbing systems and ductwork, closely coordinate the layout of these systems. Where areas of interference are apparent, prepare cross sections resolving utility conflicts when BIM model drawings are not available.

2.8.6 Stack and Riser Diagrams

Provide schematic (one line) diagrams for the following systems installed within the buildings: soil, waste, and vent; reagent grade water; potable water supply and return (hot and cold); medical gas and vacuum; medical gas and vacuum alarms; medical gas low voltage wiring; laboratory gas and vacuum; laboratory gas and vacuum alarms; fuel gas; storm water; oral evacuation systems; dental compressed air and dental alarm systems. These diagrams shall include the following types of information. Identification of critical control points for these distribution systems is important for operations and maintenance.

- Piping size and type
- Tanks (storage, expansion, chemical feed)
- Valves
- Heat exchangers
- Pumps including size and controls
- Cross connections (backflow preventers)
- Drains
- Filters
- Supplemental process equipment
- Sampling ports and monitoring locations

Provide riser diagrams for the following systems: water, natural gas, medical gases, medical vacuum, and dental systems may be shown in plan-view and two-dimensional plumbing pipe riser representation showing relative vertical position. Sanitary and neutralized (i.e. acid) waste and vent systems shall be shown in isometric projection. Indicate building finished floor elevations, size of all horizontal and vertical piping, fixture numbers being served, room locations, and means of connection between fixtures and the stacks and mains. Show each system complete and continuous.

2.8.7 Equipment Schedules

Provide plumbing schedules, including capacity, control settings, services, and sizes for all plumbing equipment and other equipment requiring plumbing services. The plumbing schedules shall be organized on the construction documents as listed in Appendix 11-C.1.6.

The plumbing designer shall follow the schedule drawing format and organization as defined in this manual.

2.9 INTERDISCIPLINE COORDINATION

The plumbing designer shall coordinate the following:

- Building plumbing fixture count

- Plumbing chase wall inside dimension and construction type for adequate water closet carrier clearances
- Plumbing fixture heights and clearances, especially for ABAAS accessibility
- Access doors shown on plans for plumbing equipment including but not limited to, water hammer arrestors, valves, and air vents. Access doors shall not diminish wall, ceiling, or floor rating.
- Shower pan construction (solid surface or tile)
- Fire-stopping for penetrations through fire and smoke barriers and floor/ceiling assemblies
- Floor drains, liquid waste, and supply connections for mechanical and medical equipment
- Fire protection drains
- Electrical power requirements for plumbing equipment
- Interface with energy management and control systems

2.10 CALCULATIONS AND REVIEW SUBMITTALS

Plumbing engineering calculations shall be submitted at various stages in the submission process. Refer to Program Guide PG-18-15 Volumes B and C for the submission requirements for what shall be submitted at each stage. Submit calculations required under the contract and submission requirements in
Appendix 11-C.

---END OF CHAPTER---

3 PLUMBING FIXTURES, FAUCETS, FITTINGS AND EQUIPMENT

3.1 PLUMBING FIXTURES

3.1.1 General

(a) Plumbing fixtures shall be located where indicated by VA Program Guide PG-18-5 (Equipment Guide List), PG-18-12 (Design Guides) and other programming design requirements.

(b) Faucets shall have a laminar flow device of brass, Monel®, or stainless steel trim. Showerhead internal construction shall be of brass, Monel®, or stainless steel. **Aerators are prohibited**. Flow restrictors at the base of the lavatory sink or sink faucet are preferred.

(c) Designer shall coordinate the use of sensor (electronic) faucets with the requirements of the end-user and the Infection Prevention and Control staff (for VHA projects). Electronic faucets can be an effective water conservation measure and can prevent contact with potentially-contaminated surfaces yet some studies have suggested that the complexity of electronic faucets combined with lower water flow rates can promote the growth of *Legionella* and other water borne pathogens. For healthcare projects, the A/E and VA Project Manager should document discussions and conclusions in the project's Infection Control Risk Assessment (ICRA).

(d) Low flow fixtures must be used in order to meet the minimum sustainable design requirements for water conservation. All materials and equipment being installed which falls into a category covered by the EPA's WaterSense® program must be WaterSense® labeled or meet or exceed WaterSense® program performance requirements, unless disallowed for infection control reasons. Plumbing fixtures with the flow rates defined below are allowed for VA projects.

Fixture	Flowrate
Water Closet	4.8 Liter per flush (Lpf) [1.28 gallons per flush (gpf)]
Dual flush water closet	6.0 Lpf/4.2 Lpf [1.6 gpf/1.1 gpf]
Urinal	1.9 Lpf [0.5 gpf]
Low flow urinal	0.5 Lpf [0.125 gpf]
Public lavatory	0.95L per cycle/1.9 Liters per minute (L/min) [0.25 g per cycle/0.5 gallons per minute (gpm)]
Private patient room, exam room, and treatment room sinks	5.7 L/min [1.5 gpm]
Clinical sink	8.3 L/min [2.2 gpm]
Mop sink	9.5 L/min [2.5 gpm]
Kitchenette/pantry sinks	8.3 L/min [2.2 gpm]
Patient room showers	7.6 L/min [2.0 gpm]
Kitchen equipment	flow rate per equipment requirements and manufacturer requirements

(e) The faucet timing shall be sufficient to deliver water at a temperature range between 29.4 deg C [85 deg F] and 43.3 deg C [110 deg F]. Domestic hot water must be available within 15 seconds of the time of operation. The faucet spout shall be gooseneck style to allow for fingers-up rinsing.

(f) Sensor-operated faucets, if used, shall be electrically hardwired and on emergency power for all new construction. Battery operated sensor faucets may be considered for renovation projects after coordination with Facility Engineering and Green Environmental Management System (GEMS). Low lighting levels in restrooms can adversely affect the operation of solar powered faucets and are not recommended.

(g) Hand-free controls (foot or knee operated) shall be employed for staff use and for scrub-up sinks, BSL-3 laboratories, pharmacy clean rooms, and other functions as needed.

(h) Where required to meet water use reduction requirements, waterless urinals may be used after approval by VA authorities. Waterless urinals are limited to non-patient/healthcare areas.

(i) Dual flush water closets shall not be used in patient rooms. Dual flush water closets shall be restricted to public areas and staff toilet rooms.

(j) Plumbing fixture numbers, description, fixture units, and minimum branch sizes are indicated in Article 3.5, Plumbing Fixture Schedules. Most VA plumbing fixture units for use in supply, waste and vent sizing comply with equivalent water supply and drain fixture units from IPC, with exceptions noted in Article 3.5, Plumbing Fixture Schedules.

(k) Individual shower and tub-shower combination valves shall be combination balanced-pressure/thermostatic valves that conform to the requirements of ASSE 1016 and shall be installed at the point of use. For other fixtures, tempered water shall be delivered through water-temperature limiting device that conforms to ASSE 1070 and between 29.4 deg C and 43.3 deg C [85 deg F and 110 deg F]. The mixing valve shall be installed as close to the fixture as possible to reduce the amount of stored tempered water to reduce the risk of *Legionella* growth.

(l) Emergency eyewash and shower equipment must be provided in accordance with VHA Directive 2009-026 (Location, Selection, Installation, Maintenance, and Testing of Emergency Eyewash and Shower Equipment). It is VA Policy to provide employees, students, and volunteers with emergency eyewash and shower stations where there is reasonable probability of injury to the eyes or skin occurring as a result of exposure to hazardous chemicals or materials. A list of required locations shall be prepared in consultation with facility Safety and Health staff, in consultation with Facility Management staff. The ANSI standard states that all flushing equipment must be located in areas that are accessible within 10 seconds (roughly 16.8 m [55 ft]). Emergency eyewash or combination eyewash and shower stations shall meet ANSI Z358.1, "American National Standard for Emergency Eyewash and Shower Equipment". Water supply shall be delivered within the temperature range of 15.6 deg C [60 deg F]

and 37.8 deg C [100 deg F]. Provide an ASSE 1071 compliant mixing valve for the tepid water supply. If a waste pipe is available within five feet of the combination eyewash/shower station, provide a floor drain adjacent to the unit. Piped drains for emergency eyewash and shower equipment are not required by the IPC, but occupants prefer piped drains for housekeeping purposes. Extraordinary hazard material (e.g. poisons) should not discharge directly into the sanitary drain system and should have a spill containment and holding system. Oily waste should have a containment or oil water separator. Frequent testing as required by the VHA Directive will refill the trap seal. Consider the use of deep seal traps or trap primers to reduce problem of unused traps drying out. Designer shall ensure the use of sanitary drains are not prohibited for infection control reasons. No floor drains are allowed in pharmacy areas.

3.1.2 Bariatric Plumbing Fixtures

(a) Floor mounted bariatric water closets are preferred for public or private bathrooms intended to serve bariatric patients. Wall-mounted water closet and water closet carrier shall be designed to carry a patient weighing 454 kg [1,000 pounds] are an option. NOTE: The COR should check with local union, clinical staff, and EMS for their preference.

(b) The bariatric water closet shall comply with ASME/ANSI A112.12.2M and be rated for 454 kg [1,000 pounds] when tested in accordance with ASME/ANSI A112.12.2M.

(c) The bariatric water closet shall be identified by its own fixture (P-#) number. The drawing shall have an installation note that identifies the bariatric water closet and alerts the contractor to the special fastening and installation requirements.

(d) The minimum space on both sides of the fixture shall be 533 mm [21 in.] between the wall and the fixture for staff to assist the patient.

(e) Lavatories shall not be installed within 1.8 m [6 ft.] of a bariatric water closet.

3.2 SPECIAL EQUIPMENT

3.2.1 Dialysis Machines

Hemodialysis machines shall be provided with a special dialysis wall box with indirect waste, or funnel type floor drain, or floor sink and cold water hose bib with vacuum breaker. Hemodialysis water systems shall be protected by a reduced pressure backflow preventer located between the potable water system and the input to the pretreatment components of the dialysis machine water system.

3.2.2 Heart and Lung Machines

Heart and lung machines shall be provided with a funnel type drain. If the apparatus is located in the operating room, an indirect waste is required.

3.2.3 Distilled Water Stills

Stills for producing distilled water shall be provided with a cold-water connection with a vacuum breaker and floor sink or funnel drain. Drain connection shall be provided with air gap.

3.2.4 Sterilizers

Sterilizers shall be provided with an acid-resistant floor sink or funnel type floor drain, a backflow-protected (ASSE 1013) water supply and steam and condensate connections in accordance with manufacturer's specifications.

3.2.5 Film Processing Areas

Film processing areas shall be provided with an acid-resistant floor sink or funnel drain for indirect waste; and a hot, cold, and/or tempered water supply operating between 4.4 deg C and 32.2 deg C [40 deg F and 90 deg F]. Brass or copper drain piping is not allowed for photo-developing equipment. Polypropylene, high silica cast iron, borosilicate glass (BSG), PVDF, or 316L stainless steel are options for pipe and drain fittings. Waste streams containing silver (recovering) shall be constructed of polyvinyl chloride (PVC) pipe and fittings. If concentration and quantity of acid waste requires neutralization, then acid waste shall be piped separately through a plastic neutralization tank prior to entering the sanitary system. Refer to VA Master Specification 22 66 00 (Chemical Waste Systems for Laboratory and Healthcare Facilities) for more information.

3.2.6 Chemical Fume Hoods

The plumbing drawings shall indicate in schedule format the cold and hot water, vacuum, compressed air, natural gas, chemical drain and vent, and medical vacuum and gases connections for chemical fume hoods. The plumbing plans shall show fume hood equipment and connections and shall cross-reference the scheduled data and equipment drawings.

3.2.7 Kitchen Equipment

The plumbing drawings shall indicate in schedule format the natural gas, steam, condensate, cold and hot water, drain, indirect drain, and vent connections for kitchen equipment. The plumbing plans shall show kitchen equipment and connections in 1:10 [1 in. = 1 ft.] dimensional format and shall cross-reference the scheduled data and equipment drawings. The plumbing designer shall coordinate connections with the equipment supplier.

3.2.8 Trash Room/Loading Dock

Provide a steam gun (steam and water mixer) with hose for this area. At minimum, a trench drain and floor sink with a minimum 75 mm [3"] outlet is required for all loading dock areas. A requirement for trash rooms is a floor drain with removable strainer and integral cleanout.

3.3 ELECTRIC WATER COOLERS

Provide wall-hung, self-contained, electric, wheelchair-accessible water coolers. Provide hi-low units in areas where only one unit is provided. The use of water bottle filler units shall be considered and evaluated by the A/E. Coordinate with electrical designer for power requirements.

Centralized drinking water cooling systems are not allowed for new construction or major renovation projects. Replace the centralized drinking water fountains with self-contained electric water coolers whenever the opportunity exists. Existing centralized drinking water

cooling systems should be decommissioned and replaced with de-centralized electric water coolers.

3.4 REDUCED-PRESSURE BACKFLOW PREVENTERS

Where reduced pressure backflow preventers are required, provide positive drainage to a floor sink or sump capable of handling peak discharge flow.

3.5 PLUMBING FIXTURE SCHEDULE

Use the following data for design of water and drainage systems, in conjunction with and superseding data found in the IPC. Plumbing fixtures are described in VA Master Specification 22 40 00, (Plumbing Fixtures). Use manufacturer's data for fixtures not included in table below or the IPC. Estimate any continuous demand separately and add this amount in liters per minute [gallons per minute] to the demand of the fixtures in liters per minute [gallons per minute].

PLUMBING FIXTURE SCHEDULE

P-Number	Description	DFU	CW WSFU	HW WSFU	Total WSFU	Waste Pipe Size mm [inches]	Vent Pipe Size mm [inches]	CW Pipe Supply Size mm [inches]	HW Pipe Supply Size mm [inches]
101-105, 107, 110-113, 114, 115	Water Closet, Flush Valve, Public	4	10	–	10	75 [3]	50 [2]	25 [1.0]	–
101-105, 107, 110-113, 114, 115	Water Closet, Flush Valve, Private	4	6	–	6	75 [3]	50 [2]	25 [1.0]	–
106	Water Closet, Tank Type, Public	4	5	–	5	75 [3]	50 [2]	10 [3.75]	–
106	Water Closet, Tank Type, Private	3	2.2	–	2.2	75 [3]	50 [2]	10 [3.75]	–
201-202 203-204	Urinal, Washout	2	3	–	3	50 [2]	40 [1.5]	20 [.75]	–
205-206	Urinal, Waterless (Note 2)	2	–	–	–	50 [2]	40 [1.5]	–	–
301, 302, 307	Bathtub, Private	2	1	1	1.4	40 [1.5]	40 [1.5]	15 [0.5]	15 [0.5]
304	Bathtub, End Type	2	1.5	2	2	40 [1.5]	40 [1.5]	15 [0.5]	15 [0.5]
305	Perineal Bath (Sitz)	2	1.5	2	2	40 [1.5]	40 [1.5]	15 [0.5]	15 [0.5]
401-404, 408, 413-415, 417-418, 420	Lavatory, Public	1	1.5	1.5	2.0	40 [1.5]	40 [1.5]	10 [3.75]	10 [3.75]

P-Number	Description	DFU	CW WSFU	HW WSFU	Total WSFU	Waste Pipe Size mm [inches]	Vent Pipe Size mm [inches]	CW Pipe Supply Size mm [inches]	HW Pipe Supply Size mm [inches]
401-404, 413-415, 417, 418, 420	Lavatory, Private	1	0.5	0.5	0.7	40 [1.5]	40 [1.5]	10 [3.75]	10 [3.75]
501-503	Service Sink	2	3	3	4	75 [3]	40 [1.5]	15 [0.5]	15 [0.5]
505	Clinical Service Sink Faucet	5	10	3	10	100 [4]	50 [2]	15 [0.5]	15 [0.5]
505	Clinical Service Sink Flush Valve	-	10	-	10	-	-		-
507	Plaster Sink	3	3	3	4	50 [2]	40 [1.5]	15 [0.5]	15 [0.5]
510, 512, 514, 516, 524, 528, 530	Sink, CRS	3	1.5	1.5	2	40 [1.5]	40 [1.5]	10 [3.75]	10 [3.75]
519, 520	Surgeons Scrub Sink	3	1.5	1.5	2	40 [1.5]	40 [1.5]	10 [3.75]	10 [3.75]
521, 522, 527	Laundry Tub	2	3	3	4	40 [1.5]	40 [1.5]	10 [3.75]	10 [3.75]
604, 608, 609	Electric Water Cooler	0.5	0.25	–	0.25	40 [1.5]	40 [1.5]	10 [3.75]	–
606	Drinking Fountain	0.5	0.25	–	0.25	40 [1.5]	40 [1.5]	10 [3.75]	–
701-704, 711	Shower, Public	2	3.0	3.0	4.0	50 [2]	40 [1.5]	15 [0.5]	15 [0.5]
701-704, 711	Shower, Private	2	1	1	1.4	50 [2]	40 [1.5]	15 [0.5]	15 [0.5]
705	Thermostatic Mixing Valve Wall-Mounted, Thermometer and Hose Assembly	–	3	3	4	–	–	15 [0.5]	15 [0.5]
706	Emergency Shower	–	–	–	–	Note 1	–	32 [1.25]	32 [1.25]
707	Emergency Shower Eye & Face Wash	–	–	–	–	Note 1	–	32 [1.25]	32 [1.25]
708	Emergency Eye & Face Wash	–	–	–	–	Note 1	–	20 [.75]	20 [.75]

P-Number	Description	DFU	CW WSFU	HW WSFU	Total WSFU	Waste Pipe Size mm [inches]	Vent Pipe Size mm [inches]	CW Pipe Supply Size mm [inches]	HW Pipe Supply Size mm [inches]
709	Emergency Eye & Face Wash (Pedestal Mounted)	–	–	–	–	40 [1.5] Note 1	–	20 [.75]	20 [.75]
801	Wall Hydrant	–	–	–	–	–	–	15 [0.5]	–
802, 804	Hose Bibb	–	–	–	–	–	–	15 [0.5]	15 [0.5]
806	Lawn Faucet	–	–	–	–	–	–	15 [0.5]	–
807	Reagent Grade Water Faucet	–	–	–	–	–	–	25 [1.0]	–
808	Washing Machine Supply/Drain Unit	3	3	3	4	50 [2]	40 [1.5]	15 [0.5]	15 [0.5]
809	Dialysis Box	–	–	–	–	50 [2] **	50 [2] **	15 [0.5] *	–
810	Thermostatic Steam/Water Mixing Valve	–	2.25	–	2.25	–	–	20 [.75]	–

* Reagent Grade Water where required by program
** Chemical-Resistant Drain Pipe

Note 1: Provide drain in accordance with Section 3.1.1(l).
Note 2: For use in non-patient areas only. Requires VHA approval.

Acronyms:
- Drainage Fixture Unit (DFU)
- Cold Water (CW)
- Hot Water (HW)
- Water Supply Fixture Unit (WSFU)

---END OF CHAPTER--

4 WATER SUPPLY AND DISTRIBUTION

4.1 GENERAL

Patient care buildings shall have a minimum of two separate service entrances each designed for full demand (serving potable, process, and fire protection systems). These services shall enter the building at separate locations from a piped loop around the building. The purpose of this provision is to provide an uninterrupted water supply to facilitate maintenance and repair functions.

When applicable, comply with potable water storage requirements as listed in the VA Physical Security Design Manual for Mission Critical Facilities. Coordinate water storage tank(s), equipment location, and utility requirements with VA Authorities, Project Manager, and Hospital Emergency Department (ED) staff.

Refer to Appendix 11-E Service Pipe Schedule for pipe types allowed for water supply piping.

Patient Care Buildings: Are buildings in which one or more of the following medical care functions take place and include:

Acute Care
Ambulatory Care
Community-Based Outpatient Clinic (CBOC)
Domiciliary
Drug/Alcohol Rehabilitation
Hospital
Community Living Center (Long-Term Care)
Medical Research
Mental Health – Inpatient
Outpatient Clinic
Psychiatric Care Facility
Rehabilitation Medicine
Rehabilitation/Prosthetics

4.2 DOMESTIC HOT WATER SYSTEMS

Instantaneous and tank type water heaters are the domestic water heater systems most commonly used. Instantaneous water heaters are best suited for a service conditions requiring a steady and continuous supply of hot water. In these systems, hot water is heated as it flows through the tubes of a shell and tube system. These systems require thermostatic mixing valves to maintain a uniform temperature because the ratio heating capacity to hot water volume is relatively small. Semi-instantaneous water heats are very similar to instantaneous ones but have a limited storage capacity that helps the system meet momentary surges in hot water demand. Alternatively, storage water heaters are best used for service conditions where hot-water requirements are not constant and a large volume of heated water is held in storage for periods of peak demand. The amount of storage required is calculated on the demand profile and the water heater recovery capacity. *Legionella* is always a concern when water is stagnant. To avoid stagnant storage conditions, designers should consider semi-instantaneous

and instantaneous hot water heater systems when feasible. Tank systems can be considered if life-cycle-cost effective but shall be designed for continuous flow to limit stagnation, a tank size adequately for the application and not oversized, and the ability to maintain a minimum water temperature of 60 deg C [140 deg F] necessary to kill bacteria.

Plate heat exchangers are a type of instantaneous hot water heater that uses metal plates to transfer heat as opposed to the more traditional shell and tube design. Plate heat exchangers transfer the heat between two fluids (i.e. water or steam). The advantage of plate type exchangers is that they are more efficient and smaller in size than the shell and tube heaters. The disadvantages are they can be more expensive and create a higher pressure drop.

An optimal hot-water heating system design is achieved by sizing the system properly to meet peak demand, enhances system efficiency and is life-cycle cost effective. Oversized piping or long pipe runs can result in delivery delay of hot water to the end users and waste both energy and water resources. Designers and plumbing contractors shall coordinate with the architect for the best routing of hot water piping systems. Double walled heat exchangers shall be used in accordance with the IPC requirements for water supply and distribution. All water heater equipment shall meet the requirements of the most current VA Master Specifications for Plumbing Systems.

Design analysis of economic criteria, peak demand requirements, daily variations, minimum flow, space restrictions, and energy sources available shall be used to determine the type of water heater system provided. Designers shall take into consideration the project requirements for backup energy sources for critical utilities including domestic water. The VA Physical Security Manual required that mission critical buildings have alternate sources of energy to maintain continuous operation during natural or man-made extreme events.

4.2.1 Water Heater Efficiency

Domestic water heater efficiency shall meet or exceed the ASHRAE 90.1-2013 minimum efficiency for service water heaters. Gas water heaters up to 530 liters [140 gallons] are covered under the Federal Energy Management Program (FEMP) and the ENERGY STAR® program. Federal laws and Executive Orders mandate the purchase of gas water heaters that meet or exceed the ENERGY STAR® listed minimum efficiency. More information regarding the FEMP can be found at: http://energy.gov/eere/femp/covered-product-categories. Gas-fired water heaters are more efficient in source energy use than electrical resistance water heaters. Avoid use of electric water heaters unless they are shown through calculation to be life-cycle cost effective or gas service is not available.

4.2.2 Water Heaters for Patient Care and Research Buildings

Water heater systems for patient care and research buildings shall be designed for redundancy of the peak load such that the building hot water demand can be met with the largest unit offline. Preference shall be given to indirect heating sources of steam or hot water from a central energy plant. However, fuel-fired heaters may be used for special applications or if an indirect source is not readily available. Fuel-fired heating sources must be life-cycle cost effective and approval of the project manager is required. Alternate sources of energy for

continuous operation are required. Electric water heater should only be used if an indirect source or other source fuels (e.g. natural gas) are not available. Hot water systems shall not use seals, gaskets or other components constructed of natural rubber which can support the build-up of biofilms. Hot-water recirculation and return piping shall be used and sized appropriately.

4.2.2.1 Instantaneous and Semi-Instantaneous Water Heaters

Provide redundant shell and tube instantaneous or semi-instantaneous central water heaters such that the building hot water demand can be met with the largest unit offline. Heating system shall be capable of supplying the peak flow demand at a minimum discharge temperature of 54.4 deg C [130 deg F]. System must have a high turndown ratio to account for periods of minimum flow. Provisions shall be made for the water heaters to provide 76.7 to 82.2 deg C [170 to 180 deg F] water at reduced flow for thermal eradication purposes. Provide a high temperature alarm device to detect mixing valve failure. Alarm shall sound when water temperature exceeds ±2.8 deg C [±5 deg F] from the setpoint of 54.4 deg C [130 deg F]. The use of plate and frame heat exchangers shall be considered by the medical center. Include a hot water re-circulating loop system and design for water discharge at a minimum of 54.4 deg C [130 deg F] or higher as necessary to maintain minimal hot-water recirculating of 51.1 deg C [124 deg F] to limit the scald risk and to prevent the growth of bacteria (*Legionella*).

4.2.2.2 Tank-Type Water Heaters

Provide redundant tank type central water heaters such that the building hot water demand can be met with the largest unit offline. Tank-type water heaters shall be designed to maintain a minimum water temperature of 60 deg C [140 deg F]. Tank-type water heaters shall be capable of raising the discharge temperature to 76.7 to 82.2 deg C [170 to 180 deg F] for thermal eradication purposes. Circulating tank water heaters shall be considered to limit temperature stratification within the tank to limit the growth of *Legionella*. Heaters shall be capable of withstanding thermal and/or chemical eradication procedures to control bacteria. Provide with access for cleaning and disinfection. Include a hot water re-circulating loop system and design for water discharge at a minimum of 54.4 deg C [130 deg F] such that circulating water is no lower than 51.1 deg C [124 deg F].

4.2.2.3 Dietetic Equipment

Provide duplex shell and steam coil booster heaters to generate the flow demand at 82.2 – 90.6 deg C [180 - 195 deg F] with each heater sized to supply 50% of demand. The use of plate and frame heat exchangers shall be considered by the medical center. Provide a hot water re-circulating system. Design sanitary drain systems using chemical sanitation agents in accordance with Federal, state and local requirements.

4.2.2.4 Booster Heaters

Provide simplex shell and tube booster heaters capable of 60 – 71.1 deg C [140 - 160 deg F] at point of use for areas needing higher water temperatures for sanitary reasons including cage washers, cart washers and sterilizers. The use of plate and frame heat exchangers will be considered by the medical center.

4.2.3 Water Heaters for Non-Patient Care Buildings

Water heaters serving non-patient care areas can be sized for 100% of peak demand in a simplex arrangement. Water heaters shall be designed with a minimum discharge temperature of 54.4 deg C [130 deg F]. System must have a high turndown ratio to account for periods of minimum flow. Tank-type water heaters shall be designed to maintain a minimum water temperature of 60 deg C [140 deg F]. Water heaters shall be capable of raising the discharge temperature to 76.7 to 82.2 deg C [170 to 180 deg F] for thermal eradication purposes. The use of plate and frame heat exchangers shall be considered when hot water heating systems are available. For buildings of less than 1,400 sq. m [15,000 sq. ft.] with no shower facilities, provide fuel fired instantaneous or tank type water heaters instead of shell and tube central heaters. Electric water heaters may be considered with VA Authorities approval.

4.2.4 Instantaneous Tankless Water Heaters (Point of Use)

Instantaneous tankless point of use (electric or gas) water heaters are not permitted as a primary source of hot water. Instantaneous tankless point of use water heaters are permitted for incidental use, sporadic equipment demands, or remote individual fixtures (e.g., lavatory, sink, shower, service sink) in non-patient areas with written justification. Point of use instantaneous water heaters are permitted for use at emergency fixtures to supply ANSI standard "tepid water" immediately at the emergency fixture or group of emergency fixtures.

4.2.5 Sizing of Water Heaters

Size instantaneous and semi-instantaneous water heaters using the WSFU method contained in the ASHRAE Handbook, Applications, Service Water Heating. Plumbing WSFU are indicated in Article 3.5, Plumbing Fixture Schedules. When a facility has a large number of patient bathrooms (greater than 100) the "Bathroom Group" fixture unit number may be substituted for the individual component WSFU. A bathroom group consists of a toilet, lavatory, and shower or bathtub. See IPC for details. Special equipment demands such as dishwashers, sterilizers, and laboratory glass washers must be added to the water heater load at 100% diversity.

Storage tank type heaters shall be sized using the gallon per hour method for fixtures contained in the ASHRAE Handbook, Applications, *Service Water Heating*. The ASHRAE Handbook includes fixture rates for a number of end uses and demand factors for several building types including hospitals and office buildings. For fixtures and building types not listed, designers shall determine the demand based on experience and standard practice. For clinics use a demand factor of 0.4 and a storage capacity factor of 1.0.

The supply of water from the utility provider varies in temperature by season and location. Designers shall obtain the seasonal cold water service temperature from the water provider for the past three years (minimum). The lowest seasonal temperature recorded shall be used to calculate the water heating energy requirements.

4.2.6 Thermostatic Mixing Valves

Master Thermostatic Water Mixing Valves (MTMV) are used to temper water distribution from the hot water source. These valves shall conform to the requirements of ASSE 1017. Designer

must consider the use of hi-low type master TMV for applications requiring a wide range of flow. Provide a lockable bypass with normally closed valve for thermal eradication situations. Provide check stops and unions on hot and cold water supply inlets, adjustable temperature setting in accordance with ASSE 1017.

The use of tempering valves, on all plumbing fixtures where people access water from the potable hot water distribution system is required in order to prevent scald injury. The water temperature delivered from the outlet must not exceed 43.3 deg C [110 deg F]. Provide ASSE 1070 tempering valves at individual point-of-use fixtures such as sinks and lavatories. Provide ASSE 1016 valves for shower and tub-shower applications that are thermostatic and pressure balancing (combination) type. In public restrooms, ASSE 1070 or ASSE 1069 tempering device may, if properly sized, serve multiple fixtures in accordance with manufacturer's requirements. Provide ASSE 1071 valves to temper water at emergency eye-wash and showers locations. Install tempering devices as close to the fixture as possible to minimize the volume of tempered and stagnant water in high risk patient areas. Additional circulation connections may be necessary to avoid dead ends.

All point of use tempering valves shall:

- Meet ASSE requirements for water temperature control for intended use
- Be "Lead Free" complying with NSF 372 (ASSE 1071 types excluded)
- Have cast bronze bodies with corrosion resistant internal parts preventing scale and biofilm build-up
- Have internal parts able to withstand disinfecting operations of chemical and thermal treatment of water temperatures up to 82.2 deg C [180 deg F]
- Allow easy temperature adjustments to allow hot water circulation
- Have integral check valves with screens and stop

4.2.7 Hot-Water Recirculation Loops and Return Piping

Recirculating water systems is a means of controlling heat loss and final delivery temperatures. Hot-water recirculation is required for all patient care buildings. Hot-water recirculation in non-patient care buildings shall be in accordance with IPC. Hot-water recirculation systems shall be designed to meet the following requirements:

- Shall be located as close to the end-use fixture as practical. Domestic hot water must be available at each hot water outlet within 15 seconds of the time of operation. Design hot water velocity not to exceed 152 cm/sec. [5 feet per second (fps)]. Due to constant circulation and elevated water temperatures, particular attention should be paid to water velocities in circulating hot water systems. Both the supply and return piping should be sized so that the maximum velocity does not exceed the above recommendations. Care should be taken to ensure that the circulating pump is not oversized, and that the return piping is not undersized; both are common occurrences in installed piping systems.
- Size the hot water return lines by the heat loss method as outlined in the ASHRAE Applications Handbook, Service Water Heating; or ASPE Data Book Volume 2, Plumbing

Systems, Domestic Water Heating Systems. The system heat loss shall not exceed 3.3 deg C [6 deg F] delta T.

- Insulation thickness shall be governed by ASHRAE 90.1-2010. Insulation thickness and re-circulating pump size shall also be selected in order to limit the domestic hot water system temperature loss not to exceed 3.3 deg C [6 deg F].
- Patient care and Research Buildings require redundant re-circulating pumps to allow for maintenance and repair without a system shutdown. Sequence of operations shall not allow for both pumps to run simultaneously. Pumps running in parallel with double the flow rate and result in excessive water velocity and pipe erosion.
- For high rise buildings, domestic hot water return loops of substantially varying pressures, as a result of pressure zoning or static head differences cannot successfully be joined to a single pressure zone water heater. Locate individual pressure zone water heaters within the pressure zones, where return pressures would vary substantially, causing deadhead on the lower pressure return circuits.
- Include provisions for isolating and balancing the system. See article 4.2.8 for more direction on system balancing.
- The use of heat tracing shall not be used in lieu of hot water recirculation systems.

4.2.8 Shut-Off and Balancing Valves

The purpose of balancing is to ensure a ready supply of hot water within reach of each fixture. The pump provides the circulation, but balancing is required to ensure that each riser (or branch) receives its proportional share of hot water (see Schematic Drawing 11-D.1.6). This is accomplished by making the pressure drop in each supply branch or riser equal so that the corresponding circulated water flow is equal. Provide separate check, isolation and balancing valves in the hot water return circulating lines at the point of connections of the domestic hot water supply line (main, branch or riser) with the hot water recirculation loop. Provide notes in the contract documents for the balance agency to set flow rate to the gpm as calculated by the system designer. The Designer shall use the circulation rates for all parts of the circulating piping and the total circulation rate required. Circulation rates are based on the heat loses in the piping system based on an allowable temperature drop of 3.3 deg C [6 deg F]. See ASHRAE Handbook, Applications, Service Water Heating, for details on hot-water recirculation loops and return piping. The balancing valve shall be the type specified in VA Master Specification 22 05 23. Lastly, velocities in hot water return piping shall be checked to ensure it does not exceed 150 cm/sec [5 fps] and cold water piping, if recirculating is necessary, shall not exceed 210 cm/sec [7 fps].

4.2.9 Heat Traps

Install heat traps (either valve type or loops) on the cold-water makeup inlet and outlet connections of all hot water storage tanks for energy savings. Loop type heat traps tend to be less problematic and are preferred. Loops should be a minimum of 46 cm [18 in.].

4.3 DEVICE CALIBRATION

Provide Pete's plugs for access at all temperature and pressure indicating devices, where analog (gauges and thermometers) and digital (sensors for the EMCS system) devices are to be used.

4.4 GENERAL PIPING DESIGN GUIDELINES

The following design practices for the design of domestic water piping system shall be followed:

4.4.1 Definitions

(a) Dead End - A length of pipe with one end open to the system and the other end terminating at a cap, blind flange or closed valve.

(b) Fixture Runout - A length of pipe with one end connected to the system (branch, riser or main) and the other end connecting to a supply stop for a piece of equipment or plumbing fixture.

(c) Oxidant Level - The amount of an oxidizing substance, such as chlorine, that is used for disinfection of the water supply.

4.4.2 Requirements for Piping Systems

(a) Dead Ends: The following design requirements shall be followed for dead-ends:

- The maximum length of dead ends shall be no greater than two pipe diameters from the branch, riser or main that it is connected to. Ideally the existing tee or fitting should be removed if the piping has no future use.
- Dead ends that terminate with a valve and a cap, plug, or flange shall be gate valves. A means to eliminate trapped fluid between the valve and the cap, plug, or flange shall be provided.

(b) Fixture Run-out: The following requirements shall be followed for water supply piping to fixtures:

- **Hot or Tempered Water Supply:** Pipe length shall be as short as possible to supply the fixture or equipment. The maximum allowable fixture run-out length of the pipe shall be determined based on the maximum allowable pipe volume method described in Chapter 7 of the International Green Construction Code, latest edition with the following exceptions. Each fixture in the bathroom group shall be evaluated to ensure turnover of hot or tempered water even if separate feed lines are required. For public lavatories and low flow lavatory fixtures 1.9 L/m [.5 gpm], the hot water run-outs lengths shall be limited to a total maximum volume of 0.35 L [12 oz.]. For lavatory faucets, other than public lavatory faucets (including hand washing sinks in patient and exam rooms), the maximum volume shall be 0.7 L [24 oz.] whether the source of hot water is from a hot-water recirculation loop or directly from a heater or boiler.
- **Cold Water Supply:** Pipe length shall be as short as possible to supply the fixture or equipment. In patient care buildings, the maximum allowable fixture run-out length of the pipe shall be determined based on the maximum allowable pipe volume method. Maximum fixture run-out lengths for cold water piping to sinks, lavatories

and showers shall be limited to a 0.7 L [24 oz.] total volume. The maximum allowable volume for water closets is 4.85 L [164 oz.] (1 water closet flush of 1.28 gpf). The maximum volume for urinals is 1.9 L [64 oz.] (1 urinal flush of .5 gpf). Each fixture shall be evaluated to ensure turnover of cold water even if separate feed lines are required.

- **Bathroom Groups:** A bathroom group is a group of fixtures located in a private bath consisting of a water closet, lavatory, bathtub or shower, including or excluding a bidet. The maximum allowable pipe volume for cold water in bathroom groups is 4.85 L [164 oz.] (1 water closet flush of 1.28 gpf) when water closets are flushed a minimum of 1 time per day. In this configuration, the cold-water supply to all the fixtures of the bathroom group shall be in series with the water closet connected as the final fixture. The water closet flushing will provide for cold water turnover within the bathroom group. See schematic drawing 11-D.1.4. Designers shall discuss expected water closet usage with the medical staff prior to completing the design. Designer shall specify the use of automatic flushing valves with timers to ensure daily flushing of cold water line from the final element. Alternatively, water closets shall be piped separately from the sink and shower.
- **Ice Machines:** Pipe length shall be as short as possible to supply the equipment. The maximum allowable fixture run-out length of the pipe shall be determined based on the maximum allowable pipe volume method. Maximum run-out lengths for ice machines shall be limited to a 0.35 L [12 oz] total volume.
- If the maximum fixture run-out length is exceeded, water must be recirculated as close to the fixture or device as possible using the chase or wall cavity. A water return line with balancing valve (or similar device) shall be used to provide continual water flow near fixture.
- The domestic water supply mains and branches may run directly over the lavatories, showers, and other plumbing fixtures requiring hot water.
- Point of Use Hot Water Heaters can be used in accordance with section 4.2.4.
- Minimum size of fixture water supply pipes shall be in accordance with the IPC.

(c) Provide proper space/maintenance access for the selected supplemental water disinfecting treatment system that is to be employed or may be employed in the future. Provide access to clean the interior of all water storage tanks. See section below for tank construction. Provide a means to flush all lines through outlets.

(d) Provide means to easily remove and disinfect all outlet devices, such as showerheads. **Aerators are prohibited**. Utilize self-draining showerheads, constructed from metal. Plastic showerhead components shall not be allowed.

(e) Whenever practical, plastic hoses and equipment containing natural rubbers shall NOT be used for any purpose in domestic cold, hot and hot water return lines. Copper or chrome plated brass tubing or pipe shall be used to connect to fixtures.

(f) Install thermostatic mixing valves (TMV) with internal check valves as close to the fixtures as possible to minimize the volume of tempered water sitting in pipe or tubing.

4.5 LEGIONELLA MITIGATION IN VA FACILITIES

4.5.1 Purpose

Veteran's Health Administration (VHA) Policy establishes guidelines for the prevention and control of healthcare-associated Legionella disease in VHA buildings. For buildings that are subject to this VHA policy, the following design features shall be included:

(a) The efficacy of biocides on suppressing or killing waterborne pathogens is dependent on multiple factors such as water quality, organic and inorganic contaminants, pH levels, disinfectant concentrations, and contact time. Water entering the building shall be continuously monitored for the following by means of gauges, sensors, and a grab sample port:

- Temperature
- Oxidant level (water disinfectant)
- pH
- Pressure

(b) Water systems within the building shall be monitored as follows in the table below. Temperature and oxidant levels are the two primary engineering controls to limit bacterial growth. Oxidant levels shall be measured continuously as water enters the building and through grab samples taken from building plumbing fixtures. Temperature shall be measured throughout the domestic water system (hot and cold). In addition to being a primary control measure, temperature can be a secondary indicator of flow since temperature of stagnant water will lower for hot water and rise for cold water.

WATER MONITORING DEVICES

Location	Hot Water	Cold Water
Tanks *	T	T
Mains/Risers	T (most remote location**)	T (most remote location)
Branch (zone)	T (most remote fixture)	T (most remote fixture)
Recirculation	T – at end of return system and prior to mixing	T – at end of return system and prior to mixing
Recirculation Pump	Flow	Flow
Service Entrance	N/A	Oxidant Residual Level

T = temperature monitoring

* Bacterial growth is most prominent in stagnant areas such as storage tanks. Use of tanks in cold water systems (where temperature is not controlled) is discouraged.

** Location at longest distance from source for all mains or risers

4.5.2 Background

Legionella is a bacterium that causes respiratory diseases collectively referred to as *Legionellosis* that includes *Legionella* pneumonia. *Legionella* pneumonia is also known as *Legionnaires* Disease (LD). *Legionella* bacteria are found naturally in water and have been associated with disease from building water distribution systems. LD occurs after inhalation or

aspiration of contaminated water. *Legionella* bacteria are not transmitted from person to person. The elderly and persons with immune compromised systems are most at risk. *Legionella* bacteria growth increases in tepid water in a range from 20 deg C [68 deg F] to 50.5 deg C [123 deg F].

Given the various factors and complexities associated with LD, 100% prevention of LD is likely not possible. However, prevention and control practices can be implemented to reduce the risk of exposing people to *Legionella* in building water distribution systems. The following are engineering controls that will suppress *Legionella* growth. More than one control may be necessary for successful inhibition of *Legionella* growth.

(a) Temperature

- Maintenance of appropriate hot water temperatures is required. Water above 51.1 deg C [124 deg F] inhibits growth of Legionella in hot water systems. Precautions for the prevention of scalding shall be included in the hot water distribution system.
- Cold water temperatures below 19.4 deg C [67 deg F] inhibit the growth of Legionella. Ideally, cold water temperatures should be maintained below 19.4 deg C [67 deg F] to the greatest extent practicable. However, adding mechanical means to cool a building's water supply is not always practical or a cost effective mitigation strategy. During the schematic design phase, this strategy shall be analyzed to determine if the existing cold water temperature is found to contribute to increased legionella findings. Additionally cooling systems shall be compared to other mitigation strategies to determine the most cost effective solution for the facility (including water recirculation). If there is no evidence of improved legionella reduction or data that supports the cooling as cost effective the system shall be designed to accommodate the addition of cooling if necessary in the future.

(b) Flow

- Recirculation of water distribution systems is a means of limiting Legionella growth due to low flow or non-use periods. Recirculation aids in maintaining required water temperatures and biocide levels. Hot water (cold water circulation shall be evaluated on the efficacy and overall impact on legionella mitigation.) distribution systems shall be continuously circulated and piping insulated.
- Maintenance of water distributions systems (e.g. mixing valves) and plumbing fixtures such as shower heads is necessary to limit the build-up of biofilms and other deposits (e.g. corrosion) that can harbor the bacteria and make it difficult to eradicate.
- In order to reduce areas of stagnant water, distribution systems shall be designed to eliminate dead ends and minimize fixture run-outs. Designer may suggest some automated manner to ensure all lines are properly flushed // daily // weekly // by means of automation such as running a fixture at the end of each line for // 30 min // 60 min // required time to empty line // to properly remove stagnant water.

(c) Oxidant (Disinfectant)

- Maintenance of disinfectant at a sufficient level to control Legionella growth may be required. The minimum level required to suppress bacterial growth will vary from building to building and by the type of oxidant (disinfectant) used. Monitoring of levels is required.

4.5.3 Piping Design Guidelines for Legionella Mitigation

The following design requirements shall be included:

- In accordance with the VHA policy, cold water temperatures should be maintained below 19.4 deg C [67 deg F] to the greatest extent practicable. An evaluation of the need to chill the domestic cold water supply shall be evaluated/included at the schematic phase. Legionella can propagate in temperatures exceeding 19.4 deg C [67 deg F]. An evaluation of the need to have a recirculation system for the domestic cold water distribution system shall be evaluated/included at the schematic phase. For cold water systems, although circulation back to the source location for the building is ideal, for renovation efforts, recirculation within the department (or floor) area of renovation would be acceptable. Should circulating cold water become necessary, basis of design shall ensure circulation during low flow conditions of no less than 3 turnovers per 12 hrs.
- Ice maker water supply lines shall be copper and insulated. Contractor shall avoid routing water lines near source of heat such as the compressor system of the ice maker.
- Cold and hot water piping systems shall be insulated in accordance with the latest version of ASHRAE 90.1.
- To enable thermal eradication and emergency shock chlorination, consider providing taps for connection of temporary booster heaters. Provide adequate electrical connections. Refer to Schematic 11-D.1.3.
- PVC pipe shall not be used for sanitary and vent lines because of the high temperature water during thermal eradication. Cast iron shall be used.
- **Aerators are prohibited** in order to reduce exposure to *Legionella* contaminated water.
- Piping materials shall be in accordance with VA Master Spec 22 11 00 Facility Water Distribution.
- Piping and components must be cleaned and protected from accumulation of debris and contamination prior to and during installation.
- Ensure that newly installed piping and components are flushed of debris and disinfected prior to being placed into service.

4.5.4 Supplemental Water Disinfection Methods

In addition to maintaining the appropriate water temperatures, minimum concentrations of various biocides (e.g. oxidizing agents such as chlorine) can inhibit the growth of *Legionella* in building potable water distribution systems. When considering the use of supplemental water disinfection methods for the prevention of *Legionella*, plumbing designers and the VA project

manager (in collaboration with other facility stakeholders such as infectious diseases and infection prevention and control) shall review the merits of the many types of supplemental systems available prior to making a final selection. VHA recognizes United States (U.S.) Environmental Protection Agency (EPA) approved oxidants (chlorine, monochloramine, and chlorine dioxide) as acceptable disinfectants for use in potable water distribution systems. Use of an alternative biocide is permitted if the medical facility obtains a waiver. Information on the different systems and techniques is available on the EPA's website and through other sources including ASHRAE.

Designers shall select the necessary equipment, piping, and controls. Adequate space shall be provided for maintenance and operations. The EPA regulates contaminant levels and disinfectant treatment for use under the Safe Drinking Water Act. Usually, the EPA delegates primacy to States for the regulation and enforcement of the Act within individual State boundaries. Systems must be specifically approved or recognized for the intended use by the State regulatory water authority. Federal and state safety regulations and permitting shall be followed. Designers shall coordinate permitting requirements with the local authority having jurisdiction. The facility must consult with the State (or its delegated local water authority) for regulating drinking water for guidance on system selection, achieving an appropriate biocide residual level at building outlets for *Legionella* growth suppression, system design, system operation, and ensuring compliance with regulations regarding water treatment system(s) and safety. Once a type of system is selected, either the State (or its delegated local water authority) or the manufacturer of the system must provide the minimum and maximum outlet biocide levels in writing for both hot and cold water.

Design parameters to evaluate for supplemental water disinfection include:

- Potential impact of supplemental disinfectant on special use water systems (see 4.5.6).
- Need for emergency power.
- System may need to be duplex for redundancy and maintenance.
- Spare parts may need to be purchased and stored locally.
- Federal and state safety regulations and permitting must be observed.
- Interaction of supplemental disinfection if shock chlorination is used as an emergency remediation method.
- Ensure enough maintenance access is provided around equipment.
- Provide sample points throughout the system to monitor effectiveness. Some critical points should be provided with automated data collection and alarm.
- Operational and maintenance requirements must be maintained to ensure system effectiveness.
- System must be equipped with automated features to ease of use and proper maintenance and operation.
- Requirements for off gassing associated with the specific chemicals (for example Sodium hypochlorite).
- Chemical spill containment systems must be provided.
- Chemical storage requirements.

4.5.5 Emergency Water Disinfection Methods

Emergency disinfection is the process of implementing immediate, temporary actions to reduce the amount of Legionella in a water distribution system.

4.5.5.1 Thermal Eradication

Thermal eradication requires potable water in the system to be raised to 71.1 – 76.7 deg C [160 – 170 deg F] and flushed through every fixture for 30 minutes. Some design considerations are as follows:

- Central water heating equipment must be capable of raising water temperature to 82.2 deg C [180 deg F].
- Master thermostatic mixing valve located in the hot water distribution system may have to be bypassed to allow hot water to circulate in the distribution system.
- Select point-of-use thermostatic mixing valves that are amenable to thermal eradication procedures. See VA Master Specification 22 05 23 for required mixing valves.
- Consider providing taps for connection of temporary booster heaters to facilitate thermal eradication (see schematic drawings 11-D.1.2).
- Provide adequate electrical connections for temporary booster heaters. Coordinate with electrical engineer.
- All equipment and appurtenances in the system will need to be reviewed for operation at elevated temperature (e.g. ensure water supply stops can withstand required temperatures).
- Means of tempering discharge will need to be considered to accommodate code requirements on discharge to sanitary sewer (max temp of 60 deg C [140 deg F]). Ensure discharge is compliant with the local requirements.

4.5.5.2 Shock Chlorination

Installation of a chlorinator is required. Shock chlorination involves the addition of chlorine to the water system in one of the forms listed above.

Some design considerations are as follows:

- Provide taps for connection of temporary equipment (see schematic drawings 11-D.1.2).
- All equipment and appurtenances in the system will need to be reviewed for operation at elevated oxidant levels.

4.5.6 Special Use Water Systems (e.g., hemodialysis, laboratory, pharmacy compounding)

It is essential to consider the implications of Legionella mitigation strategies on special use water systems within the building. Special use water systems include: Hemodialysis, Laboratory Service, Pharmacy Compounding, and Supply Process Service (SPS). Water treatment strategies and chemical disinfectants may result in the introduction of products into, or the formation of disinfection byproducts in, the building water supply at concentrations that may be toxic to patients on hemodialysis. Accordingly, the impact of mitigation strategies must account for

potential toxicity, methods for removal of the chemical agent and byproducts from the special use water system, and availability of assay methods to measure the chemical agent and byproducts for assuring patient safety. VA authorities responsible for the oversight of special use water systems are to be consulted during design development of the project and prior to any final decisions regarding water treatment strategies for Legionella.

4.6 INSPECTIONS AND WITNESS OF TESTS

The inspection plan needs the approval of the project technical COR. Frequency and requirements for inspections and testing must be added to the construction documents. Regarding inspections and test witnessing, the plumbing drawings and specifications shall coordinate with the VA Manual on Systems Commissioning and the project's commissioning specifications.

Ensure that newly installed and renovated piping and distribution system components are flushed of debris and disinfected prior to being placed into service. Piping and components must be cleaned and protected from accumulation of debris and contamination prior to and during installation. Documentation of flushing and disinfection must be maintained. Disinfection for new installations or maintenance of piping, equipment, and components shall be conducted in accordance with the requirements of the IPC, American Water Works Association (AWWA C651-05), and VA Master Construction Specifications.

4.7 WATER DISTRIBUTION SYSTEMS

(a) Where practical size incoming water service for future expansion. Provide sufficient length of pipe prior to backflow preventer for new branch connection.

(b) Water Storage Tanks: Provide adequate space for maintenance access to clean the interior of all water storage tanks. Tanks shall be provided with a man way access to allow for inspection, maintenance and cleaning. Tanks shall be constructed to minimize stagnation and thermal gradients. Mechanical cooling may be needed to maintain water temperature.

4.7.1 Metering for Use

(a) All buildings greater than five thousand square feet shall install building-level advanced utility meters for electricity, natural gas, and/or steam, if used. In addition, install advanced utility meters for steam condensate, chilled water, hot water, domestic water, and/or non-potable water, if used.

(b) Install sub-meters for cooling tower makeup water and boiler makeup water.

(c) Energy or water intensive operations (i.e. laundry facilities, kitchen operations and data centers), regardless of size, must be similarly metered.

(d) Advanced meters or metering devices and supporting systems (e.g. transmitters, web connections) must provide data at least once every 15 minutes.

(e) In addition to providing data to building operators, building-level meters must transmit meter data directly to the existing data aggregation device in use at the facility.

(f) Projects involving metering or installation of a data aggregation device must follow VA Master Construction Specifications Section 25 10 10, Advanced Utility Metering System.

(g) The designer shall investigate whether credit can be obtained from the public utility company for water consumed, but not discharged into the sanitary sewerage system. If credit is available and adequate water pressure is available, provide meters connected to the building energy management and control system for these water consumers. Examples of users are the irrigation system, cooling tower and boiler make-up, and possibly vacuum pumps.

(h) Install advanced water meters on all water wells installed on VA-owned property for agency use.

4.7.2 Measuring and Indicating Devices

Analog gauge and electronic sensors/devices shall be used in tandem as much as is practicable. The gauge device will provide a local or immediate indicator of current conditions for troubleshooting and verification purposes. The electronic sensor/device will be used for continuous monitoring of water conditions and shall be connected to the building automation system. All electrical devices shall be on emergency power. All measuring devices shall be calibrated in accordance with the manufacturer's recommendations.

4.7.3 Water Hammer Arrestors

Size the piping for the hot and cold water systems not to exceed the maximum velocity allowed by the IPC, latest edition. Provide necessary water hammer arresters in accordance with the American Society of Sanitary Engineers (ASSE) Standard 1010, Water Hammer Arresters. Size and locate arresters per Plumbing Drainage Institute (PDI) Standard PDI-WH 201, Water Hammer Arresters, latest edition, requirements. Show quantity and type of water hammer arresters on plans and riser diagrams. Water hammer arresters shall be installed with inlet isolation valves to allow for maintenance. Provide access (including access doors where applicable) for each arrester. Coordinate locations with all applicable drawings. Water hammer arresters shall conform to VA Master Specification 22 11 00 Facility Water Distribution.

4.7.4 Trap Primers

All floor drains and floor sinks shall have a single or manifold electronic trap primer supply. The trap primer control box shall be recessed. Traps primer control box shall be located a maximum of 6.1 m [20 ft.] from the traps(s) being served unless shown otherwise on the construction documents. Pressure type trap primers may also be considered. Trap primers shall be ASSE 1018 or 1044 approved. Designers shall minimize the run out length of piping for the trap primer and ensure water is flushed through to minimize the potential impact bacterial growth in stagnant water. Trap guards and rubber mechanical devices that do not use water for seal shall not be used.

4.8 WALL HYDRANTS

Provide wall hydrants a maximum of 61 m [200 ft.] apart at loading docks and at building entrances, with a minimum of one wall hydrant on each exterior wall. Where freeze conditions exist, wall-hydrants shall be non-freeze type.

4.9 COORDINATION

Designers shall coordinate electrical supply to including but not limited to, pumps, electronic faucets, electronic flush valves, electronic trap primers, and electronic water coolers.

4.10 BACKFLOW PREVENTERS

The domestic water supply must be protected from contamination due to non-potable liquids, solids, and gases being introduced into the potable water supply through backsiponage and backpressure. Water supply to all equipment, fixtures, and pure water systems shall be evaluated as to the potential contamination hazard level. All backflow preventers shall comply with ASSE requirements. Buildings with a single service entrance shall be provided with dual parallel piped reduced pressure backflow preventers to allow for maintenance without a water shutdown. Patient care buildings shall have two separate service entrances that will allow for servicing without an outage. Provide a backflow preventer device as listed in IPC Chapter 6, Water Supply and Distribution and the following:

4.10.1 Reduced Pressure Backflow Preventers

Reduced pressure backflow preventers conforming to ASSE 1013 shall be installed for the following equipment applications and systems.

- Deionizers
- Sterilizers
- Stills
- Dialysis, Deionized or Reverse Osmosis Water Systems
- Water make up to heating systems, cooling tower, chilled water system, generators, and similar equipment consuming water
- Water service entrance from loop system
- Dental equipment
- Power washer
- Cart washer
- All laboratory and industrial water systems

4.10.2 Atmospheric Vacuum Breakers

Atmospheric vacuum breakers conforming to ASSE 1001 shall be installed for the following equipment applications and systems.

- Hose bibs and sinks with threaded outlets
- Disposers
- Showers (handheld type)
- Hydrotherapy units

- Autopsy, on each hot and cold water outlet at each table or sink
- All kitchen equipment, if not protected by air gap
- Ventilating hoods with wash down system
- Film processor
- Detergent system
- Fume hoods
- Glassware washers

4.10.3 Hose Connection Vacuum Breakers

Hose connection vacuum breakers conforming to ASSE 1011 shall be installed in the following locations for equipment and fixtures requiring non-continuous pressure:

- Hose bibbs and wall hydrants.
- Faucets with threaded outlets:
  - Service Sinks
  - Laundry Tubs

Provide cold water connection and/or treated water with a backflow preventer to the controlled temperature room humidification system.

4.10.4 Fire Sprinkler Systems and Standpipes

Fire sprinkler systems and standpipes shall be protected against backflow by a double check prevention assembly meeting the requirements of the IPC and VA Master Specification 21 10 00 (Water-Based Fire Suppression Systems). Fire sprinkler systems connected to nonpotable sources or systems that contain additives or antifreeze the potable water system shall be protected against backflow by a reduced pressure principle backflow prevention device conforming to ASSE 1013.

4.11 PRESSURE-REDUCING VALVES

Minimize the use of pressure-reducing valves by providing separate domestic hot water heating systems for each pressure zone in multi-story buildings.

4.12 DOMESTIC WATER BOOSTER SYSTEMS

4.12.1 Minimum Pressure

Maintain a minimum pressure of 241 kPa [35 psig] at the most remote plumbing fixtures or the minimum pressure requirements of connected equipment, whichever is higher. Obtain a flow test indicating static and residual pressures and flow volume to use in calculating minimum water pressure required. In minimum pressure calculations, use residual pressure at design flow. Investigate for daily pressure fluctuations experienced by the building water supply and modify starting pressures accordingly. Provide a pressure gauge on the top floor branch adjacent to the riser as described in in section 4.7.2.

4.12.2 Patient Care Buildings

(a) Use a three-pump system. System shall be configured so that at least two pumps will be in service if any one pump is taken out of service.

(b) Size one pump for approximately one-third of the total water demand.

(c) Each of the other pumps shall be sized for approximately two-thirds of the total demand.

(d) The smaller pumps shall operate until water demand exceeds the pump's capacity, at which point that pump shall stop and one of the other larger pumps shall start.

(e) When the demand exceeds the capacity of the larger pump, the smaller pump shall restart and both pumps shall operate together to provide 100% of the total demand.

(f) The other large pump shall be a standby and alternate with the first large pump to balance the run time of each pump.

(g) Install a hydro-pneumatic tank on the booster system discharge and "NO-FLOW" shutdown controls.

(h) The domestic water booster pump package including VFD, controls, and controlling devices shall be on emergency power.

(i) Discharge pressure shall be controlled using Pulse Width Modulated-Based (PWM) variable frequency drives through a packaged booster pump controller.

(j) Use spring-loaded swing check valves on pump discharge.

(k) Pumps discharge pressure, temperature, and alarms shall be monitored by the Building Automation System (BAS).

4.12.3 Non-Patient Care Buildings

Use a two-pump system. Size each pump for 75% of the total water demand. Pumps shall alternate. When the demand exceeds the capacity of one pump, both pumps shall operate. Provide a pneumatic tank and "NO-FLOW" shutdown controls.

4.13 SOLAR DOMESTIC WATER HEATING

The Energy Independence and Security Act (EISA) 2007 section 523 requires "that at least 30% of the hot water demand for each new federal building or existing federal buildings undergoing a major renovation be met through the use of solar hot water heating, if it is determined to be life-cycle cost-effective) Refer to the VA Sustainability and Energy Reduction Manual. In the United States, different types of solar water heating systems are available. Different design guidelines are available from the National Renewable Energy Laboratory (NREL) and American Society of Heating, Refrigeration, and Air-Conditioning Engineers (ASHRAE) for small size systems, and the US Army Corps of Engineers Central Solar Hot Water Systems Design Guide.

4.13.1 Basic Solar System Design

The main components added to a conventional heating system when solar thermal energy is used are:

- Collector field with collector field piping and support structure
- Heat transfer fluid (water glycol mixture)
- A storage tank system
- Pump for solar loop and pumps for other loops
- Heat exchanger(s) to transfer heat from one loop to another shall be double walled with an air gap open to the atmosphere between the two walls.
- Expansion and safety devices for each closed loop
- A controller with temperature sensors in collector field and storage tank that turns the pump on and off

Since the solar thermal system will provide only a percentage of the main water heating source, an auxiliary (back-up) water heater is necessary to provide 100% of the hot water demand load in the event of high demand or periods of too little solar radiation. All potable water storage tanks shall maintain a minimum water temperature of 60 deg C [140 deg F] necessary to kill bacteria. Systems shall be designed to prevent contamination from non-potable liquids, solids or gases being introduced into the potable water supply through cross-connections or any other piping connections to the system. Solar hot water equipment shall conform to the requirements of VA Master Specification 23 56 00, Solar Hot Water Heating System.

Selecting the right solar water heating system will depend on three key factors: climate, budget, and water usage needs. There are a number of technologies available to heat water efficiently. Solar water heating systems may be used throughout the United States on any building with a south-facing roof or unshaded grounds for installation of a collector. In addition, reliable off-the-shelf systems may be selected from the Directory of the Solar Rating and Certification Corporation at: http://www.solar-rating.org/index.html.

System sizing estimates based on climate:

- Sunbelt - use 0.09 sq. m [1 sq. ft.] of collector per 7.61 L [2 gal] of tank capacity (daily usage).
- Southeast and Mountain states - use 0.09 sq. m [1 sq. ft.] of collector per 5.71 L [1.5 gal] of tank capacity.
- Midwest and Atlantic states - use 0.09 sq. m [1 sq. ft.] of collector per 3.79 L [1.0 gal] of tank capacity.
- New England and the Northwest - use 0.09 sq. m [1 sq. ft.] of collector per 2.81 L [0.75 gal] of tank capacity.

Estimates will be affected by water temperature, consumption amount, and the solar resource available at the site.

4.13.2 Simple System Calculation

A simple evaluation procedure can help to determine if solar water heating is appropriate. Traditional solar hot water heating systems are most cost effective in facilities with the following:

- Constant water heating load throughout the week and year; housing units and dining facilities are examples.
- High fuel costs to heat water; this is area specific.
- Sunny climates; this is area specific.

The economic viability of a solar system depends on the following aspects, including but not limited to:

- Amount of annual sunshine.
- Heating energy requirements throughout the year.
- Cost of the solar system.
- Price of conventional fuels.
- Temperature of hot water that is required.
- Annual operation and maintenance costs.

---END OF CHAPTER---

5 SANITARY DRAINAGE SYSTEMS

5.1 SANITARY DRAINAGE

5.1.1 Pipe Design

Sanitary pipe design slope in accordance with International Plumbing Code, IPC Table 710.1(1).

Designs should not include sanitary waste piping buried in slabs under electrical rooms, surgical areas and like areas. Avoid routing waste piping above food, surgical, computer rooms, and similar areas. Waste piping shall be properly insulated in areas where condensation is possible. Two-way directional cleanouts shall be provided at the building exterior to provide effective cleaning of mains upstream or downstream of flow.

Drainage systems shall be designed for flow by gravity and the use of a pumping system shall be avoided wherever possible. If pumping systems are required, equipment shall be duplex type with each pump having the capacity of discharging 100 percent of the incoming peak flow. Design shall arrange plumbing system to prevent sewage backflow in the building due to stoppage in the exterior sewer by providing relief outside the building through sewer manhole.

5.1.2 Floor Drains

Floor drains shall not be installed in private or individual toilet rooms with a single water closet. Provide a minimum of one floor drain with trap primer in public toilet rooms containing two or more water closets or a combination of one water closet and one urinal.

In all cases, floor drains are to be installed in bathrooms with shower fixtures.

Floor drains shall be installed in Mechanical Rooms unless noted otherwise in Contract Documents.

5.1.3 Fixture Units

See Article 3.5, Plumbing Fixture Schedules, for drainage fixture units (DFU) and waste/vent minimum fixture branch sizes. Sanitary waste piping shall be designed to maintain a velocity of 2 feet per second (fps). Special attention should be given to the design of sanitary waste systems serving low-consumption water closets as well as systems transporting waste that increases the potential for pipeline stoppages. Fixture connections shall be arranged to provide increased trailing water such as pipe drain slope and size to enhance drain line carry, especially for waterless urinals and low-consumption toilet fixtures. Environmental Protection Agency (EPA) studies show that 100 mm [4 in] drain pipe with a 1% slope is adequate, but a 75 mm [3 in] drain pipe with a 2% slope was better. Designer should analyze the existing condition of drain-line piping in renovation projects. Defects, root intrusion, sagging, excessive corrosion could result in clogging with the lower flush volumes.

5.1.4 Sanitary Connections

Provide an adequate number of sanitary connections from a building. Design each sanitary sewer connection not to exceed 300 mm [12 in] diameter and provide at least two connections from each building with the following exception: one sewer is adequate for a building that can be served by a 150 mm [6 in] or less diameter pipe. Dedicated branch lines serving food service areas shall connect to the building drain independent of other areas of the building to avoid possible waste stoppages in the main lines to back up into sanitary kitchen areas.

5.1.5 Fats, Oil, and Grease (FOG) Removal Systems

Kitchen waste containing FOG shall be provided with a removal system. Provide access for maintenance. Kitchen sanitary and vent shall be cast iron piping. Refer to VA Master Specification 22 13 23 for small point-of-use removal systems within the building envelope. Refer to VA Master Specification 33 33 00 for large concrete systems installed outside of the building envelope.

5.1.6 Dialysis Sanitary Drains

Sanitary drains for dialysis systems shall consist of chemical resistant pipe (CRP) and air gap. Refer to the standard detail in the VA TIL and VA Master Specifications for materials.

5.1.7 Waste Neutralization Systems

A corrosion resistant waste and vent system shall be provided to serve laboratory research areas, aggressive waste discharges, cage wash areas and associated floor drainage and equipment (with the exception of bedding and solid waste disposal).

Laboratory waste or other special waste and vent systems shall be separate from the general use sanitary system and shall be provided in accordance with the general drainage design considerations for the conventional building waste system. The A/E shall carefully evaluate sizing of laboratory waste systems. Many items of equipment do not directly correspond to flow rates and values of common Hunter's Curve fixture unit tables, as the tables are based around flow discharge characteristics of domestic plumbing fixtures and water closets. Cage and tunnel washers and similar equipment can generate particularly high peak flows and often produce suds laden wastes. Diligence shall be provided to validate system sizing for proper operation and for consideration of waste stack arrangement, segregation of wastes, and appropriate relief venting and suds control design to prevent backflow.

pH treatment systems are not automatically required at all laboratories, however automatic monitoring systems (as a minimum) are required for all lab and vivaria buildings. The A/E shall discuss the need for pH treatment systems with VA Authorities based on the specific facility, though practice is generally to install pH treatment systems for most lab and vivaria facilities to protect campus infrastructure and ensure compliance with regulations. Where pH adjustment systems are utilized, the A/E shall consider the characteristics of effluent to be treated. In general, pH treatment systems shall be of the active type, capable of positively neutralizing acidic or caustic pH to acceptable parameters in consideration of varied inflow rates and pH levels, through use of automatic injection and mixing of acid and base reagents, monitored and controlled by a PLC or by treatment systems relying on limestone or marble chips for alkaline waste streams. Treatment systems utilizing limestone or marble chips are not suitable for wastes containing solids or slurry including cage wash areas. pH treatment systems shall be fully accessible, and shall not be located in rooms housing air handler units or mechanical air intakes. The A/E shall consider segregation of pH treatment equipment and chemicals in a dedicated, properly ventilated service area, and shall ensure provisions for removal and replacement of equipment. The cleaning and disposal of trapped solids and media is subject to strict disposal guidelines, requires extensive maintenance, and as such any application of limestone/marble chip systems shall be carefully evaluated. The A/E shall evaluate whether a batch-type, or continuous flow-through, system is most desirable. Waste streams with significant solid matter

load is better suited to the batch-type process, however in either case the selected system shall be specially designed to, automatically handle the anticipated solid load and flush all solids without requiring extensive operator maintenance, strainers, or exposure to the waste stream. Laboratory waste treatment systems shall be sized to the system demand and consider the facility load profile. Most laboratory waste streams are effectively treated in a very short time utilizing continuous flow/hybrid systems, and excessive retention times are typically not required when using properly designed equipment.

The A/E shall specify quality pH monitors and components, and pH monitors, pumps, and similar controls shall not be located inside the tank. Systems shall utilize sufficiently sophisticated controls to match reagent injection to the influent requirements and influent and effluent characteristics. Continuous, flow-through systems shall include controls and tank designs to permit limited retention in the event of a spike in the pH of the influent stream. Batch-type systems shall default to continuous flow-through mode in the event a batch tank is removed for service. Dual mixers should be provided for reliability. System discharge valve and controls shall be on emergency power to ensure continuous drainage and prevent flooding.

5.1.8 Chemical-Resistant Piping

Provide chemical-resistant pipe for all waste and vent piping serving laboratory fixtures and film processing equipment. When fusion joint plastic piping systems are used, mechanical joints shall be installed at traps and trap arms for maintenance reasons. Chemical drainage (acid or alkaline) shall pass through a neutralizing system before connecting to the building sanitary drainage system. Install chemical-resistant vent pipe independently of other vent systems through the roof. For pipe materials refer to Appendix 11-E Service Pipe Schedule.

5.1.9 Cast Iron Piping

Cast iron is the preferred material for sanitary and vent piping due to noise reduction, durability, fire resistive properties, and it is made of nearly 100 percent recycled content. With written approval from the VA Authorities, PVC meeting VA Master Specifications installed per the Plastic Pipe Institute recommendations can be used in low temperature, horizontal, buried soil and waste pipe in buildings under 1,400 sq. m [15,000 sq. ft.]. Switch to cast iron above grade.

5.1.10 Cleanouts

Show and identify the type of cleanouts on the plans and stack and riser diagrams. Cleanouts shall be extended to the floor where the fixture(s) served are located. For example, extend a cleanout serving a floor drain to the same floor level of the drain. Do not locate cleanouts above ceilings or in crawl spaces. In addition to the requirements of the IPC, provide a cleanout at the top and bottom of all waste and soil stacks, install “end of run” cleanouts for a group of fixtures. Cleanouts shall extend above the flood rim elevation of any fixture located near the cleanout and be connected to the same waste line.

Cleanout intervals shall be spaced according to the IPC.

5.1.11 Waste and Vent Systems

Sovent® or other alternative combination waste and vent systems **are prohibited**. Mechanical vent devices, such as air admittance valves and other non-conventional systems shall not be

used without prior approval of VA Authorities. If approved, installation shall be in strict accordance with the IPC or local code, whichever is more stringent. Access to mechanical vent devices shall be clearly indicated on the drawings.

5.2 GRAY WATER RECYCLING SYSTEM

Gray water recycling systems can reduce potable water consumption for landscape irrigation. A gray water recycling system shall be considered only if economically feasible after a life cycle cost analysis review. Gray water recycling systems shall be considered primarily for below grade landscape irrigation. Gray water recycling systems may be considered for industrial uses in non-patient care buildings only with approval of VA Authorities.

Gray water recycling systems shall comply with IPC or local codes whichever is more stringent. At a minimum, system components shall include a filter system for incoming gray water, a vented reservoir tank with tank drain and overflow connected to the sanitary drainage system by airgap. An approved disinfection unit shall treat the water prior to distribution to flushing fixtures. The distribution piping shall be clearly marked "Non-Potable Water, Not Safe for Drinking". Gray water for flushing shall be dyed by a vegetable based dye if required by code.

Only wastewater from tubs, showers, lavatories, clothes washers and laundry trays shall be collected for gray water recycling.

A backflow protected potable water connection shall provide system make-up water.

5.3 SCHEDULE OF FLOOR DRAINS

Indicate the size and type of all floor drains on the plans and diagrams. See VA Master Specification 22 13 00, FACILITY SANITARY SEWERAGE for floor drain descriptions.

Animal Areas	Type	Waste Pipe Size mm/[in.]	Remarks
Cubicle Housing	F	100 [4]	
Large Animal Conventional	J	100 [4]	Flushing rim, stainless steel trench with grate
Receiving & Examination	F	75 [3]	
Cage Wash Room	F	75 [3]	
Cage Washer	I	100 [4]	
Dark Room	X	75 [3]	
Infectious Animal Suite:	N	100 [4]	
Sterilizer			Install per manufacturer's requirements
Necropsy	K	100 [4]	Sealable FD – flushing rim
Post-Operative Intensive Care	K	100 [4]	Sealable FD – flushing rim
Quarantine Room	F	75 [3]	

Dietetic Areas	Type	Size mm/[in.]	Remarks
Can Crusher	S	75 [3]	
Can Wash Pit	S	100 [4]	
Canteen	S	75 [3]	Modify with 50 mm [2 in] hole in grate
Dining Room Serving Line	S	75 [3]	Modify with 50 mm [2 in] hole in grate
Dishwashing Room Floor	S	75 [3]	
Food Conveyer Belt	S	50 [2]	Under belt with 15 mm [1/2 in] grate
Hood Washdown	none	75 [3]	Stub up to 75 mm [3 in] pipe 150 mm [6 in] AFF
Hot Food Table	S	75 [3]	With 15 mm [1/2 in] grate
Kitchen, Main	S	75 [3]	Prep area
Kitchen, Main	S	75 [3]	At kettles and cooker
Kitchen, Serving	S	75 [3]	With 15 mm [1/2 in] grate
Platform Scale Pit	S	75 [3]	
Pot Sink	S	75 [3]	No grate
Prep, Meat and Dessert	S	75 [3]	At each kettle with sediment basket
Prep, Vegetable	S	75 [3]	With 15 mm [1/2 in] grate
Pulper	S	100 [4]	With 50 mm [2 in] hole in grate
Refrigerator, Chilled Vegetable	S	75 [3]	Inside, with air gap
Refrigerator, Garbage	S	75 [3]	Inside
Refrigerator, Machine Room	S	75 [3]	
Refrigerator, Walk-In	S	75 [3]	Outside refrigerator door with depressed grate
Scullery	S	75 [3]	For portable sink, with depressed grate
Tray Make-Up	S	75 [3]	With 50 mm [2 in] hole in grate
Trayveyor Shafts	S	75 [3]	With 50 mm [2 in] hole in grate

Dietetic Areas	Type	Size mm/[in.]	Remarks
Vending Machine Room	S	75 [3]	

Film Processing Areas:	Type	Size mm/[in.]	Remarks
Cardiac Cath. Dark Room	T	100 [4]	At XP-6 w/full flow thru funnel
Processing Unit	T	75 [3]	With full flow thru funnel
Roll Processing	T	50 [2]	
Chemical Storage Sump	X	50 [2]	

Hospital Areas	Type	Size mm/[in.]	Remarks
Aide-A-Bath	M	75 [3]	
Autopsy Room	J	75 [3]	Flushing rim type
Bldg. Management/Storage	D	75 [3]	
Cart Storage Room	C	50 [2]	
Cart Wash	R	100 [4]	
Clean Work Area	C	75 [3]	
Congregate Bath	C/S	50 [2]	
Cysto Room	L/S	75 [3]	At foot of table
Deep Therapy Equipment Room	M	50 [2]	
Glasswasher	R/S	75 [3]	
Hydrotherapy Area (stainless steel)	C	50 [2]	Adjacent to tub
Hydrotherapy Congregate Bath	O	75 [3]	With 20 mm [3/4 in] grate or (stainless steel) 50 mm [2 in] hole in grate
Ice Machine	M	50 [2]	
Laboratory	F	75 [3]	
Linear Accelerator	C	50 [2]	
Perineal Bath	C	50 [2]	
Shower, Double	C/D	75 [3]	
Shower, Single	C/D	50 [2]	
Soiled Linen Collection Room	D	75 [3]	

Hospital Areas	Type	Size mm/[in.]	Remarks
SPD Sterilizers	R/S	100 [4]	
Trash Collection Room	D	75 [3]	
Washer Sterilizers	R	100 [4]	50 mm [2 in] hole in grate

Laundry Areas	Type	Size mm/[in.]	Remarks
Laundry	B/F	75 [3]	F for seamless vinyl
Lint Collector	H	100 [4]	

Mechanical Equipment Areas:	Type	Size mm/[in.]	Remarks
Boiler House	E	75 [3]	With 15 mm [1/2 in] grate
Boiler Water Column Drain	V	100 [4]	One for each boiler
Compressor Room	E	75 [3]	Modify with funnel
Fan Room	E	75 [3]	With 15 mm [1/2 in] grate
Incinerator Room	E	100 [4]	
Machine Room	E	75 [3]	
Mechanical Equipment Room	E	100 [4]	With 15 mm [1/2 in] grate when adjacent to equipment
Paint Spray Booth	H	100 [4]	
Steam Service Entrance Pit	E	75 [3]	
Water Softener	R	100 [4]	

Miscellaneous Areas:	Type	Size mm/[in.]	Remarks
Finished Walk Areaway	B	100 [4]	
Window Well Areaway	B	75 [3]	
Silver Recovery Room	T	75 [3]	
Parking Decks	E	100 [4]	
Parking Garage	E	100 [4]	

Types:

B - Galvanized body with nickel bronze grate, medium duty with secondary strainer, min. 175 mm [7 in.].

C - Body with nickel bronze grate, light duty, square 150 mm [6 in.] with vandal proof screws.

D - Body with flange, satin nickel bronze or satin bronze grate, 175 mm [7 in.] square or round.

E - Heavy body with non-tilting nickel bronze or ductile iron grate, removable sediment bucket, min. 300 mm [12 in.] square. Extra heavy duty grate for traffic use.

F - Body with flange, satin nickel bronze or satin bronze grate, use for seamless vinyl floors.

G - Body coated with acid resistant porcelain enamel finish with nickel bronze grate, 200 mm [8 in.] in diameter, with perforated aluminum sediment basket.

H - Body with secondary strainer, loose set nickel bronze grate, 300 mm [12 in.] diameter or square.

I - Body coated with acid resistant enamel finish with loose set nickel bronze grate, 300 mm [12 in.] square, with 100 mm [4 in.] deep aluminum enameled finish sediment basket with grips, wide flange for seamless floor.

J - Body (heavy duty) with flushing rim and nickel bronze grate, 280 mm [11 in.] diameter and deep seal trap.

K - Same as J except solid bronze grate.

L - Body (heavy duty) with solid bronze grate with 50 mm [2 in.] long by 20 mm [3/4 in.] pipe brazed or threaded into center of grate, gas tight installation with deep seal trap, and flushing rim.

M - Body with nickel bronze adjustable funnel strainer and round or square grate.

N - Body coated wide flange for seamless floors, with acid resistant enamel finish with nickel bronze grate, 200 mm [8 in.] diameter, 50 mm [2 in.] deep aluminum enameled sediment basket with grips.

O - Body coated with acid resistant enamel finish, 300 mm [12 in.] diameter or square, dome type secondary strainer without grate.

P - Body coated with acid resistant enamel finish with a loose set nickel bronze grate, 300 mm [12 in.] square, 100 mm [4 in.] deep aluminum enameled finish sediment basket with grips.

R - Body coated with acid resistant enamel finish with secondary dome strainer and without grate, 200 mm [8 in.] square.

S - Floor sink, 304 Stainless Steel body with polished interior with internal dome strainer, non-tilting loose grate, 300 mm [12 in.] square.

T - Polypropylene chemical resistant body, schedule 40 or 80 with funnel strainer and integral trap.

V - Body with oval funnel strainer and square grate, 232 square cm [36 sq. in.].

W - Open sight drain. Washing machine drain or mechanical room condensate.

X - Polypropylene chemical resistant body, schedule 40 or 80 with integral trap.

Y - Galvanized body with extra heavy duty polished bronze grate, vandal-proof, min. 230 mm [9 in.], with under deck clamp, suitable for parking decks.

NOTES:

1. All floor drains shall comply with ANSI A112.6.3.
2. All floor drains shall have cast iron (CI) bodies unless stated otherwise.
3. Floor drains for general floor drainage are located by architect. Use Type "C" in finished areas.
4. Connect cooling tower drain, overflow and blowdown to the sanitary sewer.
5. Provide drain type as recommended by manufacturer at floor level for ethylene oxide sterilizer fitting. Caulk fitting tight.
6. Provide trap primer for all drains not receiving a direct discharge.

---END OF CHAPTER---

6 BUILDING STORM DRAINAGE SYSTEMS

6.1 STORM SYSTEM DRAINAGE

The plumbing designer shall contact the local authorities having jurisdiction (AHJ) to determine local requirements for storm water drainage. The storm drainage system shall collect clear water from roof drains. Condensate from air conditioning units shall be collected by the storm water drainage system unless prohibited by local AHJ.

6.2 ROOF DRAIN LEADER INSULATION

In locations where the ASHRAE winter 1% dry bulb temperature is below 0 deg C [32 deg F], insulate and heat trace the roof drain basins, roof drain leaders, and overflows above lay-in or hard ceilings.

6.3 CALCULATIONS

The plumbing designer shall submit sizing calculations for area/roof drain systems. Pipe sizing shall be based upon the local rates of rainfall as indicated in the IPC or in accordance with the requirements of the local AHJ, whichever is more conservative.

6.4 STORM CONNECTIONS

Maximum allowable size for storm drain is 300 mm [12 in.]. Provide backwater valves where backflow of storm water into the building is anticipated.

6.5 SCHEDULE OF AREA/ROOF DRAINS

Indicate the size and type of all area/roof drains on the plans and diagrams. See Master Specifications 22 14 00, FACILITY STORM DRAINAGE for roof drain descriptions.

6.6 LOCATION OF DRAIN LEADERS

Drain leaders shall be located in permanent shafts or building columns and not in interior partitions. Vertical piping shall be designed with minimal offsets and shall avoid the placement of horizontal piping above conference spaces, offices, electrical rooms and other critical areas. Secondary overflow drain leaders or scuppers shall discharge to a visible/conspicuous (such as adjacent to a frequently used door) location as required by the IPC.

6.7 UNDERSLAB AND FOUNDATION DRAINAGE

Sump and associated pumping equipment for sub-soil drain tile shall be located inside of the building. Some situations may require sumps and associated pumping equipment to be located outside of the building. In all instances, sufficient clearance shall be provided for maintenance and replacement access. Pumps shall be provided in a redundant configuration and be connected to an emergency power source.

6.8 RAIN WATER HARVESTING SYSTEM

Rain water harvesting systems can reduce potable water consumption for landscape irrigation. A rain water harvesting system shall be considered if economically feasible after a life cycle cost analysis review and approval by VA Authorities. Rain water harvesting systems shall only be considered for flushing of water closets, urinals, and flushing rim floor drains in **non-patient care buildings** or for below grade landscape irrigation.

Rain water harvesting systems shall comply with local code. At a minimum, system components shall include a vortex filter for incoming rain water, a vented storage tank with float, controller panel, sediment filter, disinfection unit, day tank, booster pump with backflow preventer, pump, and overflow drain to the storm drainage system. The distribution piping shall be clearly marked "Non-Potable Water, Not Safe for Drinking". See Section 09 91 00 Painting for additional information. Rain water for flushing shall be dyed by a vegetable based dye if required by code.

Only rain water from the building roof shall be collected for the distribution system. A backflow protected potable water connection shall provide system make-up water.

---END OF CHAPTER---

7 SPECIALTY TRAPS, INTERCEPTORS, AND SEPARATORS

7.1 SAND/GRIT TRAPS

Sand interceptors shall be provided where sand, grit or sediment may enter the wastewater stream. Wastewater collected from garage drains or car washes shall discharge to a sand/grit interceptor prior to an oil/water separator. Floor drains in mechanical rooms, area ways, and garages shall be equipped with sediment buckets.

7.2 OIL/WATER INTERCEPTORS

Oil interceptors shall be provided to serve potential sources of oil discharge (including transformer vaults), and shall be engineered to provide effluent discharge levels to solvent extractable matter of mineral or synthetic origin to a maximum of 10 ppm and total suspended solids to a maximum of 350 ppm. In some cases, the use of coalescing filters may be required (depending on application) to ensure clean discharge in accordance with most current environmental discharge regulations.

In accordance with ASME A17.1 "Safety Code for Elevator and Escalators" and the VA Transport Services (Elevators) Design Manual, elevator pits shall have sump pumps provided with control systems capable of pumping water at a rate of 11.4 m^3/h (3000 gal/h) until oil in the water is detected. Once oil in the water is detected the pump shall stop and activate an alarm. Oil laden water shall be removed prior to pump restart. The operator shall be provided with a manual override to restart pump. The sump discharge shall connect to the building sanitary sewer line by an airgap unless directed otherwise by the local AHU.

7.3 GREASE INTERCEPTORS

Drains and fixtures discharging fat, oil, or grease-laden waste, within 3 m [10 ft] of the cooking battery, mop and service sinks in kitchen areas; and as required by the State Health Department and local authorities, must discharge to a grease interceptor before connecting into the sanitary sewer.

Grease interceptors must be sized for compliance with the requirements of the local authority. Where permitted by the local authority, grease interceptors shall comply with the Plumbing and Drainage Institute (PDI) Guideline PDI-G101. Drains, fixtures, and equipment must discharge to the grease interceptor, as required by the State Health Department and the local authority. Food grinders, vegetable sinks, fish scaling sinks, meat cutting sinks, and clear-water wastes are prohibited from extending to the grease interceptor and must not be connected.

7.4 PLASTER TRAPS/INTERCEPTORS

Plaster interceptors shall be provided when precious metals, heavy metals, (such as silver and barium) or sediment is in the waste drainage from spaces such as dental laboratories, cast rooms, prosthodontics laboratories, barium procedure areas, and spaces employing blood analyzers. Interceptors for barium waste shall be aluminum.

7.5 CONTAMINATED WATER AND SANITARY WATER RETENTION

When applicable, comply with contaminated water storage requirements as listed in the VA Physical Security Design Manual for Mission Critical Facilities. Coordinate decontamination equipment location and utility requirements with VA Authorities, Project Manager and Hospital

Emergency Department (ED) staff. Consult with the local authority having jurisdiction (AHJ) for proper discharge and disposal of contaminated wastewater.

---END OF CHAPTER---

8 MEDICAL GASES AND VACUUM

8.1 GENERAL

8.1.1 Water Cooled Equipment

Test water or obtain analysis from the medical center to determine if additional water treatment is required for water-cooled equipment. If so, describe additional water treatment requirements in the specifications. Water quality for water cooled equipment is per manufacturer's minimum requirements. Single pass potable water shall not be used for equipment cooling.

Establish water pressure at the pump and compressor locations to determine if booster water pumps are necessary. If pressure is less than 345 kPa [50 psig], the pump or compressor may not perform adequately. Investigate several manufacturers' requirements to maintain competition and to reduce the incidence of change orders.

8.1.2 Renovation Projects

In renovation projects, survey the medical center to ascertain the type of existing medical gas station outlets and medical vacuum terminal inlets. The master specification requires that new outlets and inlets match the existing terminal connections. In the case where existing station outlets or terminal inlets are not U.L.-approved, or not gas-specific, or meet current NFPA 99 requirements, the CO shall include provisions for competitive bids on new outlets and inlets.

8.2 MEDICAL GAS AND VACUUM SYSTEMS

8.2.1 Oxygen, Medical Compressed Air, Medical Vacuum, Nitrous Oxide, Nitrogen Systems, Carbon Dioxide, Waste Anesthesia Gas Disposal and Instrument Air

Design oxygen, medical compressed air, medical vacuum, nitrous oxide, nitrogen, carbon dioxide, waste anesthesia gas disposal (WAGD), and instrument air systems in accordance with current editions of:

- NFPA 55, Compressed Gases and Cryogenic Fluids Code
- NFPA 99, Healthcare Facilities
- Compressed Gas Association (CGA) Publication M1
- Guide for Medical Supply Systems at Consumer Sites
- Master Specification 22 62 00, Vacuum Systems for Laboratory and Healthcare Facilities
- Master Specification 22 63 00, Gas Systems for Laboratory and Healthcare Facilities
- American Society of Plumbing Engineers (ASPE) Data Book Volume 3 - Special Plumbing Systems
- ASSE/IAPMO/ANSI Series 6000 Professional Qualification Standard for Medical Gas System Personnel

Projects that include these systems require installers to be ASSE 6010 certified; testing personnel must be ASSE 6020 certified and inspectors and verifiers must be ASSE 6030 certified.

8.2.2 Central Supply Systems

Design medical gas and vacuum systems to deliver the following pressures at the points of use for the longest pipe run:

(a) Oxygen: 345 kPa [50 psig]. In designing oxygen systems with adult ventilators, size the piping system based on the instantaneous demand based on 3.3 liters/sec [7 standard cubic feet per minute (scfm)] for each ventilator from the outlet back to the source.

(b) Nitrous Oxide: 345 kPa [50 psig].

(c) Nitrogen: 1448 kPa [210 psig].

(d) Medical Air: 345 kPa [50 psig].

(e) Medical Vacuum: 51 kPa [15 in Hg].

(f) Carbon Dioxide: 345 kPa [50 psig].

(g) WAGD: 20 kPa [6 in Hg].

8.2.2.1 Sizing the Systems

All systems shall comply with NFPA 99 requirements. Bulk gas systems shall be designed in accordance with NFPA 55, Compressed Gases and Cryogenic Fluids Code. CGA M-1, Guide for Medical Supply Systems at Consumer Sites, captures the requirements from these codes along with best practices to provide a comprehensive document for the process of designing, locating, installing, starting up, maintaining, testing, removing, and documenting work on a medical gas supply systems. Designer shall perform a cost analysis to determine whether bulk tanks, manifold or equipment shall be used.

Chapter 2 "Plumbing Design for Healthcare Facilities" of the ASPE Data Book Volume 3, provide gas pipe sizing criteria. Diversity factors of all systems shall be determined by recommendations found in the ASPE Data Book Volume 3, the VA Plumbing Design Manual and VA Medical Staff. After reviewing PG 18-5, Equipment Guide and PG-18-12, Design Guide coordinate with Medical Staff and A/E to determine the quantity of compressed air outlets, vacuum system inlets and diversity factors required during the program phase of the project.

The medical vacuum system shall be sized based upon Chapter 2 "Plumbing Design for Healthcare Facilities" of the ASPE Data Book Volume 3, Special Plumbing Systems. Increase the standard cubic feet per minute of the system load by 25 percent to accommodate future system expansion. WAGD systems shall be sized for 100 percent of the calculated demand with no diversity factor. Combined medical vacuum and WAGD systems are not recommended due to potential of fire or explosion. ASPE does not recommend combining these systems. Obtain approval of the medical center for a combined system. If the medical vacuum and WAGD systems are combined size the medical vacuum system to accommodate the combined load plus 25 percent capacity for future expansion. Systems shall comply with NFPA 99 requirements.

8.2.2.2 System Setup

(a) Place a source shut-off valve for each medical gas and vacuum system at the immediate outlet (or inlet, in the case of vacuum) of the source of supply, so that the entire supply source, including all accessory equipment, can be isolated from the entire pipeline system.

(b) Include sufficiently sized and properly constructed storage space for the gas cylinders with manifold systems. Primary and reserve banks are required for cylinder gas sources.

(c) The medical air compressors and medical vacuum pumps shall serve the medical air and medical vacuum systems only.

(d) Locate compressors and pumps in a clean, relatively cool environment (i.e., not with steam equipment, not to exceed 38 deg C [100 deg F] ambient temperature). Locate equipment in an area where it can be monitored regularly.

(e) Medical air compressors and vacuum pumps shall be multiplexed with single receivers. Size compressors and pumps such that 100% of the peak design load is carried with the largest single unit out of service. Provide three-way valve bypass at receiver.

(f) Vacuum systems shall be protected with appropriate filtration (0.3-micron hydrophobic filter or equivalent) on the suction side of the pumps to minimize the potential for contamination of the vacuum pumps.

(g) Liquid oxygen containers shall either:

1. Comply with appropriate requirements of the ASME Boiler and Pressure Vessel Code, Section VIII, Unfired Pressure Vessels; insulation surrounding the liquid oxygen container shall be noncombustible material.
2. Be designed, constructed, tested, and maintained in accordance with the U.S. Department of Transportation (DOT) Specifications and Regulations for 4L containers.

(h) High-pressure gaseous oxygen containers shall either:

1. Be designed, constructed, and tested in accordance with appropriate requirements of the ASME Boiler and Pressure Vessel Code, Section VIII, Unfired Pressure Vessels.
2. Be designed, constructed, tested, and maintained in accordance with U.S. Department of Transportation (DOT) Specifications and Regulations.

(i) The preferred location for manifold systems is indoors adjacent to the loading dock. The room shall have a minimum of 10 air changes per hour of outside ventilated air with a maximum temperature of 32 deg C [90 deg F]. There shall be no doors, vents, or other direct access between the anesthetizing location or the storage location and any combustible agents. The room shall be properly labeled and secured.

(j) In designing a system where adult ventilators are used, for each ventilator in use, add the ventilator requirement of 99 L/min [3.5 cfm] to the compressor sizing. Size the piping system based on the instantaneous demand of 198 L/min [7 cfm] for each ventilator from the outlet back to the source.

(k) Air compressors shall be a type that provides "Medical Compressed Air," as defined by NFPA 99 and meets VA Master Specification 22 63 00, Gas Systems for Laboratory and Healthcare Facilities.

(l) Design air dryers, filters, and pressure regulators for the medical air system in duplex, each sized for 100% of the load using duplex twin tower desiccant dryers. Include continuous line dew point and carbon monoxide monitoring with sample connections on the discharge piping downstream of the filters and regulators. Locate monitors at the pump control panel or integrated with the control panel.

(m) Locate the medical air compressor system intake outdoors above the roof or downstream of the air handler final filter. Intake shall be located at least 7.6 m [25 ft.] (may be more depending upon prevailing wind direction and velocity) from any building opening or other intake, and where no contamination from engine exhausts, fuel storage vents, vacuum system discharges, particulate matter, or odor of any type is anticipated. Air that is already filtered for ventilation system use is an acceptable source of air for medical air compressors. Combined intakes must be sized for no restriction while flowing the maximum intake possible, and provided with an isolation valve at the header for each compressor served.

(n) Combine discharge from each medical vacuum pump into one discharge pipe, sized for no restriction while flowing the maximum discharge possible, and provide an isolation valve at the header for each pump served. Exhaust discharge at the highest point of the building, above and at least 7.6 m [25 ft] horizontally (may be more depending upon prevailing wind direction and velocity) from any intake, door, window, louvered or ventilating opening of the building.

(o) Central supply systems for oxygen, medical air, nitrous oxide, carbon dioxide, and all other patient medical gasses shall NOT be piped to, or used for, any purpose except patient care applications. Prohibited uses of medical gases include but not limited to: fueling torches, blowing down or drying any equipment (such as laboratory equipment, endoscopes or other scopes), or any other purposes. Also prohibited is using oxygen or medical air to raise, lower, or otherwise operate booms or other devices in operating rooms (ORs) or other areas.

8.2.3 Piping Systems

(a) Design pressure piping systems not to exceed 10 percent of system working pressure. Design vacuum piping systems not to exceed 10 kPa [3 in Hg] loss for longest run of pipe to point of use.

(b) Provide main line supply line with a shut-off valve. Locate valve to be accessible by authorized personnel only, downstream of the source valve, and outside of the source room, enclosure, or area where the main valve enters the building. Identify this valve. A main line valve is not required when the source shut-off valve is accessible within the building.

(c) Each branch or riser supplied from the main line shall have an in-line shut-off valve adjacent to the main. Each branch supplied from a riser shall have an in-line shut-off valve, adjacent to the riser. Conceal in-line shut-off valves (e.g., above ceiling with ceiling tag, or in a locked equipment room) and make a provision to lock them open. Provide additional service valves above ceiling to subdivide areas for maintenance.

(d) Include a zone valve in a cabinet with other medical gas zone valves, for all anesthetizing locations and branches serving station outlets and inlets in conformance with NFPA 99.

(e) Combine WAGD piping with the medical vacuum system piping above ceiling and after zone valve per NFPA 99 requirements. Combined WAGD and medical vacuum system are not recommended. Obtain approval of the medical center for a combined system.

(f) Except for nitrogen systems, medical gas station outlets and vacuum station inlets in new buildings shall be quick coupler type. Where building alterations or additions occur, station outlets and inlets shall be compatible with those of the existing building, without the use of secondary adapters.

(g) All nitrogen station outlets are required to be DISS-type, and shall be located inside nitrogen control panel (NCP) within the room being served.

(h) Locations of piped medical gas station outlets and vacuum station inlets are indicated in VA Program Guide PG-18-5, Equipment Guide List.

(i) Provide a protective pipe enclosure for exterior oxygen line. Burial depth shall be a minimum 0.6 m [2 ft.] below grade. Provide warning tape that is acid and alkali-resistant with a metallic core encased in a protective jacket, detectable by metal detector.

(j) Coordinate the requirement for the use of adult ventilators, in the Operating Rooms, Cardiac Care, ICU, and Recovery Area with the medical center. Design the oxygen and medical air systems to accommodate the ventilators. For pipe sizing, the demand for adult ventilators is 200 L/min [7.0 cfm].

- **Oxygen System:** Minimum design flow rate for any pipe section is 200 L/min [7.0 cfm].
- **Vacuum System:** Minimum design flow rate for any pipe section is 113 L/min [4 cfm].
- **Medical Air System:** Minimum design flow rate for any pipe section is 200 L/min [7.0 cfm].

(k) The minimum size of vacuum piping shall be 20 mm [3/4 in.] with 15 mm [1/2 in.] drops to individual inlets permitted.

8.2.4 Alarms

(a) To ensure continuous responsible observation, two master system alarms, in separate warning locations, are required for each medical gas and vacuum system.

(b) The primary warning location shall be supervised by engineering personnel and shall be located at one of the following (in order of priority): boiler plant control office, engineering control center, or in the office or principal working area of the individual responsible for the maintenance of the medical gas system. The primary alarm point shall be an alarm point in the direct digital control system and a physical, labeled, visual alarm indicator inside the primary warning location.

(c) The secondary warning location shall be situated to ensure continuous surveillance during the working hours of the facility. Suitable secondary warning locations may include: intensive care nursing unit, fire station, telephone switchboard, security office, or other continuously-staffed location.

(d) Coordinate both master alarm panel locations with the user facility and the other design services. When deciding upon alarm locations, consider emergency power circuits, engineering control center data relay interface locations, and the facility's established procedures for monitoring alarm signals. Provide the following on plumbing drawings:

- Low voltage wiring and pressure switches associated with master alarm signals and panels (on floor plans).
- Low voltage wiring diagram associated with master alarm signals and panels.
- Conduit and/or communication cable runs from the sensor locations to area alarm panels (on floor plans and medical gas and vacuum system diagrams).

Each medical gas and vacuum system shall have a local area alarm installed at the corresponding nurse's station in all areas where medical gas and vacuum station outlets and inlets are installed.

8.2.5 Connections to Existing Medical Gas Systems

(a) Coordinate time for shut down of any existing medical gas system with the medical center. Work shall be completed by an ASSE 6010 certified installer.

(b) All oxygen zone valves and gas riser valves should be shut off if the section to which they connect cannot be totally isolated from the remainder of the system.

(c) Ensure that the correct type of pipe tubing and fittings are being used. All medical gas and oxygen shall be cleaned for oxygen service. All medical gas piping and fittings shall be cleaned for oxygen service. Materials, installation and testing shall be in accordance with NFPA 99 requirements.

(d) Prior to joining the new system to the existing the new pipe line should be checked for particulate or other forms of contamination. New piping shall be cleaned, tested, and purged in accordance with NFPA 99.

(e) A spot check of the existing pipelines in the facility should also be made to determine the level of cleanliness present.

(f) Reduce the pressure to 0 Pa [0 psig] and make the tie-in as quickly as possible.

(g) Install a shut-off valve at the connection of the new line to the existing line. The valve assembly should be fabricated and brazed onto the connecting line.

(h) The use of shape memory alloy couplings is recommended when making connections to existing medical gas systems.

(i) "Hot" taps or similar type of valves **<u>are prohibited</u>** in medical gas systems.

(j) After the tie-in is made and allowed to cool, the source gas, i.e., oxygen, is slowly bled back into the pipeline. The work area is tested for leaks with soapy water and any leaks are repaired.

(k) After any leaks are repaired and the line is fully recharged, blow down and testing are performed. The zone closest to the main is opened to the system, the closest outlet to the work is accessed, and the main blown through the outlet. After the outlet blows clear into a white cloth, an oxygen analyzer is used to determine that only oxygen is present. An additional check is made at the zone most distant from the site of the work.

(l) Prior to putting system into service testing shall be conducted by a party technically competent and experienced in the field of medical gas and vacuum pipeline testing and meeting the requirements of ASSE 6030, *Professional Qualifications Standard for Medical Gas Systems Verifiers*. Testing shall be performed by a party other than the installing contractor.

8.3 LABORATORY GAS AND VACUUM SYSTEMS FOR RESEARCH AND MEDICAL LABORATORIES

Design laboratory compressed air, laboratory vacuum, natural gas, and miscellaneous laboratory cylinder gas systems in accordance with current editions of:

- NFPA 54, National Fuel Gas Code
- NFPA 58, Liquefied Petroleum Gas Code
- NFPA 59A, Standard for the Production, Storage, and Handling of Liquefied Natural Gas (LNG)
- NFPA 99, Healthcare Facilities
- ASPE Data Book Volume 3
- Master Specification 22 62 00, Vacuum Systems for Laboratory and Healthcare Facilities
- Master Specification 22 63 00, Gas Systems for Laboratory and Healthcare Facilities

8.3.1 Central Supply Systems

(a) Provide minimum 690 kPa [100 psig] laboratory air at the compressor discharge. Run 690 kPa [100 psig] air to a storage room (or other non-working or unfinished space) in the laboratory area being served. Valve and cap the 690 kPa [100 psig] air line for future connection. Tee off the 690 kPa [100 psig] line and locate a pressure-regulating valve to reduce the air pressure to 345 kPa [50 psig]. Run 345 kPa [50 psig] air to all outlets in laboratory hoods and benches.

(b) If specifications for laboratory equipment being purchased by the medical center are known, and the equipment requires higher air pressures, provide additional tee, regulator, and piping to that equipment at the required pressure.

(c) Natural gas, Liquefied Petroleum Gas (LPG), Liquefied Natural Gas (LNG) and manifold laboratory gas system pressures shall be determined on a project basis.

(d) Design laboratory vacuum systems to deliver 51 kPa [15 in Hg] of vacuum at the point of use.

(e) Place a source shut-off valve for each laboratory gas and vacuum system at the immediate outlet (or inlet, in the case of vacuum) of the source of supply, so that the entire supply source, including all accessory equipment, can be isolated from the entire pipeline system.

(f) In facilities where manifold laboratory gases occur, ensure that adequately sized and properly constructed storage space is provided for the gas cylinders. Primary and reserve banks are required for cylinder gas sources.

(g) Locate laboratory air compressors and vacuum pumps in a clean, relatively cool environment (i.e., not with steam equipment, exceeding 38 deg C [100 deg F] ambient temperature). Locate equipment in an area where it can be monitored regularly.

(h) Laboratory air compressors and vacuum pumps shall be multiplexed with single receivers. Compressors and pumps shall be sized such that 100% of the peak design load is carried with the largest single unit out of service. Provide three-way valve bypass at receiver.

(i) Vacuum systems shall be protected with appropriate filtration (0.3-micron hydrophobic filter or equivalent) on the suction side of the pumps to minimize the potential of the vacuum pumps.

(j) Laboratory air compressors and vacuum pumps shall be designed and installed with regards to cleanliness and reliability as an NFPA 99 Category 3 system, but shall be completely independent of medical gas systems serving patients except as allowed by NFPA 99.

(k) Vivarium Gas for Animal Procedures: Oxygen, carbon dioxide, and other gas services to vivaria shall be designed and installed with regards to cleanliness and reliability as an NFPA 99 Category 1 system, but shall be completely independent of medical gas systems serving humans.

(l) Design air dryers, filters, and pressure regulators for the laboratory air system in duplex, each sized for 100% of the load using duplex twin tower desiccant dryers. Include continuous dew point monitoring downstream of the regulator and carbon monoxide monitoring with sample connections on the discharge piping after the filters and regulators. Locate monitors adjacent to the control panel or integrated with the control panel.

(m) Locate the laboratory air compressor system intake outdoors above roof level or downstream of air handler final filter. Intake shall be located at least 7.6 m [25 ft] (may be more depending upon prevailing wind direction and velocity) from any building opening or other intake, and where no contamination from engine exhausts, fuel storage vents, vacuum system discharges, particulate matter, or odor of any type is anticipated. Air that is already filtered for ventilation system use is an acceptable source for laboratory air compressors. Combined intakes must be sized for no restriction while flowing the maximum intake possible, and provided with an isolation valve at the header for each compressor served.

(n) Combine discharge from each laboratory vacuum pump into one discharge pipe, sized for no restriction while flowing maximum discharge possible, and provide an isolation valve at the header for each pump served. Exhaust discharge at the highest point of the building, above and at least 7.6 m [25 ft.] horizontally (may be more depending upon prevailing wind direction and velocity) from any door, window, or louvered or ventilating opening of the building.

8.3.2 Piping Systems

(a) Design pressure piping systems not to exceed 34 kPa [5 psig] loss from source to point of use of the longest pipe run. Vacuum piping system pressure drop shall be designed not to exceed 10 kPa [3 in Hg] loss from source to point of use of the longest pipe run.

(b) Provide main line supply line with a shut-off valve. Locate valve to be accessible by authorized personnel only, downstream of the source valve, and outside of the source room, enclosure, or area where the main valve enters the building. Identify this valve. A main line valve is not required when the source shut-off valve is accessible within the building.

(c) Each branch and riser supplied from the main line shall have an in-line shut-off valve adjacent to the main. Each branch supplied from a riser shall have an in-line shut-off valve adjacent to the riser. Conceal in-line shut-off valves (e.g., above ceiling with ceiling tag, or in a locked equipment room). Comply with applicable codes and standards for concealed valves of flammable gases.

(d) Include a zone valve in a cabinet with other laboratory gas zone valves for branches serving laboratory gas outlets. Locate separate natural gas zone valve cabinets adjacent to other laboratory gas zone valve cabinets. Provide additional service valves above ceiling to subdivide areas for maintenance. Valves shall be accessible only to maintenance personnel.

(e) Laboratory gas outlets and vacuum inlets shall be standard needle valves.

(f) Locations of piped laboratory gas outlets and vacuum inlets are indicated in VA Program Guide PG-18-5, Equipment Guide and PG-18-12, Design Guide and coordinated with Research and Laboratory Staffs.

(g) Provide an emergency natural gas solenoid valve for each laboratory area. Locate emergency shut-off switch adjacent to exit.

8.3.3 Alarms

To ensure continuous responsible observation, two master system alarms, in separate warning locations, are required for each laboratory gas and vacuum system.

The primary warning location shall be supervised by engineering personnel and shall be located at one of the following (in order of priority): boiler plant control office, engineering control center, or in the office or principal working area of the individual responsible for maintenance of the laboratory gas system.

The secondary warning location shall be situated to ensure continuous surveillance during the working hours of the facility. Suitable secondary warning locations may include: fire station, telephone switchboard, engineering control center, security office, or other continuously-staffed location.

Coordinate both master alarm panel locations with the user facility and the other design services. When deciding upon alarm locations, engineering control center data relay interface locations, and the facility's established procedures for monitoring alarm signals. Provide the following on the plumbing drawings:

- Low voltage wiring and pressure switches or sensors associated with master alarm signals and panels (on floor plans).
- Low voltage wiring diagram associated with master alarm signals and panels.
- Conduit and wiring runs from the sensor location to area alarm panels (on floor plans and laboratory gas and vacuum system diagrams

8.4 ORAL EVACUATION SYSTEM

Design the oral evacuation system in accordance with NFPA 99, Category 3, VA Master Specification 22 62 19.74, Dental Vacuum and Evacuation Equipment, and the following:

8.4.1 High Volume Oral Evacuation (HVE) - General

Locate HVE system outlets in floor-mounted utility junction centers. A utility junction center (UJC) is a grouping of specific utilities brought to a designated location in each dental operatory to provide convenient points of connection to the dental operating unit equipment, which will be furnished by VA. A single 50 mm [2 in.] diameter wall outlet shall be provided in each recovery room.

8.4.2 Airflow and Vacuum Requirements

(a) Design airflow of 3.3 L/sec [7 scfm] at each UJC.

(b) Design airflow of 3.3 L/sec [7 scfm] at wall outlet in recovery rooms.

(c) System shall develop and maintain a vacuum of 27 Pa [8 in Hg].

(d) No diversity shall be assumed when sizing HVE systems.

8.4.3 Vacuum Relief Valves

Provide a vacuum relief valve at the end of each trunk line.

8.4.4 High Volume Oral Evacuation (HVE) Systems

(a) Oral evacuation systems are wet systems that must be piped below the finish floor elevation of the Dental area to prevent the possibility of contaminates re-entering the patient care area in the event of a power outage. Past experience has proven that routing piping above and in ceilings can be problematic. When overhead pipe routing cannot be avoided, provide cleanout fittings at the base of all risers and observe these requirements:

- Minimize lift height.

- Vertical pipe run from inlet to overhead pipe shall be 1/2-inch diameter or in accordance with manufacturer's recommendation.
- The vertical pipe shall "tee" into the top of the overhead branch main.
- The available vacuum level to satisfy performance requirements shall be based on a reduction of the pump-generated vacuum at the rate of 3.39 kPa [1 in. Hg] for each 335 mm [1.1 ft.] rise.

(b) Provide duplex or multiplex high efficiency, continuous duty, vacuum producers each capable of carrying 70% of the design load. Pumps shall be sized to produce 27 kPa [8 in. Hg] of vacuum at an airflow of 425 L/m [15 scfm] at each UJC. Refer to VA Master Specification 22 62 19.74 Dental Vacuum and Evacuation Equipment for requirements. Locate remote from dental facilities at an elevation lower than UJCs.

(c) Vacuum systems shall be protected with appropriate filtration (0.3-micron hydrophobic filter or equivalent) on the suction side of the pumps to minimize the potential for contamination of the vacuum pumps. The piping run for the UJC should continuously slope back to the vacuum source to facilitate the transportation of fluids and particles. Minimum required slope shall be 6.35 mm per 3 m [1/4-in. per 10 ft.].

(d) Combine exhausts into a common pipe sized for one vacuum producer. Discharge exhaust pipe to outdoors above roof of portion of building where located. Do not discharge within a 3 m [10 ft.] radius of any door, window, air intake, or ventilation opening.

(e) Increase airflow demand as follows to compensate for friction losses:

The Total Number of Utility Junction Centers (UJC)	% Increase
9 to 20	10
21 to 44	15

(f) Install separators ahead of each vacuum producer. Quantity and size shall be as follows:

The Total Number of Utility Junction Centers (UJC)	Quantity	Size L [gallon]
6	2	75 [20] each
7-10	2	150 [40] each
11 and above	2	300 [80] each

(g) AMALGAM separators shall be installed on vacuum lines in dental offices per EPA, Effluent Limitations Guidelines and Standards for Dental Category, also called "the Dental Rule". For additional information visit https://www.epa.gov/eg/dental-effluent-guidelines and SECTION 22 62 19.74 DENTAL VACUUM AND EVACUATION EQUIPMENT

8.5 DENTAL COMPRESSED AIR SYSTEMS

Design central piped dental compressed air distribution system in accordance with current editions of NFPA 99, Compressed Gas Association Standards, Master Specification 22 61 13.74, DENTAL COMPRESSED-AIR PIPING and 22 61 19.74, DENTAL COMPRESSED-AIR EQUIPMENT (DENTAL COMPRESSED AIR SYSTEM), and the following:

8.5.1 Dental Compressed Air Systems and Equipment

Dental compressed air systems and equipment shall be completely independent of the medical and laboratory air systems and equipment.

8.5.2 Central Supply System Pressure Requirements

(a) Verify the pressure requirements for the dental clinic with the VA authorities, and design the system accordingly. Design systems for the demand utilizing diversity factors indicated in the charts at the end of this chapter.

(b) High pressure dental air compressors shall be designed to produce air at a maximum of 965 kPa [140 psig] with a single stage, without excess noise and vibration. The system shall be capable of producing NFPA 99 Category 3 compressed air. Compressors shall be duplex and sized such that 100% of the design load is carried by the largest single unit out of service. Refer to VA Master Specification Section 22 61 19.74 for technical details on compressor equipment.

(c) Low pressure dental air compressors shall be designed to produce air at a maximum of 690 kPa [100 psig] with a single stage, without excess noise and vibration. The system shall be capable of producing medical gas grade air NFPA 99 Category 3 compressed air. The compressors shall be multiplex and sized such that 100% of the design load is carried by the largest single unit out of service. Refer to VA Master Specification Section 22 61 19.74 for technical details on compressor equipment.

(d) Include primary and secondary air dryers, filters, pressure regulators, all with a valve bypass. Continuous line dew point and carbon monoxide monitoring shall be included.

(e) Locate compressors in a clean, relatively cool environment (i.e., not with steam equipment, not to exceed 38 deg C [100 deg F] ambient temperature). Locate equipment in an area where qualified personnel can monitor it regularly.

(f) Place a source shut-off valve at the immediate outlet of the source regulator, so that the entire supply source, including all accessory equipment, can be isolated from the entire pipeline system.

(g) Locate the dental air compressor system intake outdoors above roof level, or downstream of air handler final filter. Intake shall be located at least 7.6 m [25 ft.] (may be more depending upon prevailing wind direction and velocity) from any building opening or other intake, and where no contamination from engine exhausts, fuel storage vents, vacuum system discharges, particulate matter, or odor of any type is anticipated. Air that is already filtered for ventilation system use is an acceptable source of air for dental air compressors. Combined intakes must be sized for no restriction

while flowing the maximum intake possible, and provided with an isolation valve at the header for each compressor served.

(h) Dental air system design shall comply with NFPA 99 Category 3 medical gas system requirements.

8.5.3 Piping Systems

(a) Size piping mains to accommodate 25% excess capacity for future expansion. Design low pressure system to deliver a regulated 690 kPa [100 psig], not to exceed 35 kPa [5 psig] loss from source for the longest pipe run to point of use. Design high pressure system to deliver a regulated 965 kPa [140 psig], not to exceed 35 kPa [5 psig] loss from source for the longest pipe run to point of use.

(b) Provide pipe riser of 15 mm [1/2 in.] minimum pipe for each Utility Junction Center (UJC) in the dental treatment rooms. Connect riser to branch or main line. Provide shutoff valve at each UFC.

(c) Each branch riser supplied from the main line shall have an in-line shut-off valve adjacent to the main. Conceal in-line shut-off valves (e.g., above ceiling with ceiling tag, or in a locked equipment room).

(d) To minimize piping, locate multiple air pressure regulators in or near the dental suite as required.

(e) Locations of piped dental air outlets are indicted in VA Program Guide PG-18-5, Equipment Guide List and PG-18-12, Dental Design Guide.

(f) Air that is normally used for dental laboratory restorative and fabrication techniques may be provided by same source for dental treatment rooms.

(g) Provide an emergency gas solenoid shut-off valve on the natural gas line to the treatment rooms and laboratory areas at the exit of each area.

(h) Natural gas from a single source for dental treatment rooms and dental laboratories is allowed.

(i) Fuel gas (i.e. natural gas) valves shall be provided with lockout devices to prevent unauthorized access when patients are alone in rooms or the rooms are left unattended for periods of time. Coordinate this requirement with the Chief of Dental Services.

8.5.4 Dental Air System Demand

The dental air system shall be sized utilizing criteria and methods found in the following tables. The designer shall calculate the dental clinic demand, laboratory demand and sterilization demand from the tables to determine the total dental air system demand required.

8.5.4.1 Dental Treatment Room Equipment

Air volume, pressure requirements, and simultaneous use factors for Dental Treatment Room Equipment are listed in the following schedules. For equipment not listed coordinate requirements with the Chief of Dental Service:

AREA	EQUIPMENT	VOLUME L/s [scfm]	PRESSURE kPa [psig]
Exam, general treatment operatory, and dental hygiene rooms	Needle valve wall outlet	0.12 [0.25]	345 [50]
Exam, general treatment operatory, and dental hygiene rooms	UJC	1.4 [3]	690 [100]
Oral Surgery	DISS outlet to surgical hand piece	10 [21.1]	965 [140]
Oral Surgery	UJC	1.4 [3]	965 [140]

QUANTITY OF OUTLETS/UJC per DENTAL CLINIC	CLINIC DIVERSITY, FACTOR (PERCENT)
1 through 3	100
4 through 6	90
7 through 12	80
13 through 19	70
20 and over	60

(a) To determine the total clinic demand-load, the designer shall use the number of outlets and utility junction centers (UJC) and their volume requirements times a diversity factor as found in the above tables.

Oral Surgery
Example: 2 (DISS outlets) x 10 L/s (volume) x 100 (percent diversity) = 20 L/s

Example: 6 (UJC) x 1.4 L/s (volume) x 90 (percent diversity) = 7.6 L/s

Total 27.6 L/s

8.5.4.2 Prosthetics Laboratory

Air volume, pressure requirements, and simultaneous use factors for dental laboratory equipment are listed in the following schedules. For equipment not listed coordinate requirements with the Chief of Dental service.

EQUIPMENT	VOLUME L/s [scfm]	PRESSURE kPa [psig]
Needle valve in benches and casework	0.12 [0.25]	345 [50]
Quick coupler for lab air-gun	0.12 [0.25]	345 [50]
Quick coupler for lab hand piece	1.4 [3]	345 [50]
Threaded valve for shell blaster or sandblaster	10 [21.1]	690 [100]
Threaded valve for micro-blaster	1.4 [3]	690 [100]
Pneumatic chisel	0.85 [1.8]	700 [101.5]
Micro-finisher	1.4 [3]	690 [100]

NUMBER OF LAB OUTLETS/EQUIPMENT DENTAL LABORATORY	LABORATORY DIVERSITY FACTOR (PERCENT)
1 through 5	60
6 through 10	50
11 through 19	40
20 and over	30

(a) To determine the total laboratory demand-load, the designer shall use the number of outlets and equipment connections and their volume requirements times a diversity factor as found in the tables above.

Example: 4 (needle valves) x 0.12 L/s (volume) x 60 (percent diversity) = 0.29 L/s

Example: 2 (valves for sandblaster) x 10 L/s (volume) x 60 (percent diversity) = 12 L/s

Total 12.29 L/s

(b) To determine the sterilization demand, multiply the number of hand piece purge stations by 0.472 L/s. Calculate the demand at 100% with no diversity factor.

8.5.4.3 Standard Dental Air Demand

The standard dental air demand for the facility shall be the sum of the dental clinic demand, dental laboratory demand, and the sterilization demand.

8.6 DESIGN FOR DENTAL UNIT WATER LINES

In 2003, Center for Disease Control (CDC) published its Guidelines for Infection Control in Dental Health-Care Settings which concluded that "dental unit water that remains untreated or unfiltered is unlikely to meet drinking water standards." Subsequent studies have demonstrated that daily flushing of water lines does not affect biofilm or reliably improve water quality. Therefore, municipal water supplied to utility junction centers (UJC) shall require a supplemental water treatment system or chemical treatment product. Using untreated municipal water at the utility junction centers (UJC) is prohibited. Water supplied from an alternate source by means of a reservoir at the dental unit is a viable alternative. Commercial methods to improve the quality of water used in dental treatment are available. Methods containing self-contained water systems combined with chemical treatment, in-line micro filters, and combinations of these methods have proven effective. Plumbing Designers shall coordinate the dental unit water requirements with the Chief of Dental Services early in the design process.

---END OF CHAPTER---

9 FUEL GAS SYSTEMS

9.1 INTERIOR FUEL GAS SYSTEMS

Design natural gas piping systems in accordance with NFPA 54; Liquefied Petroleum Gas (LP-Gas) in accordance with NFPA 58; Liquefied Natural Gas (LNG) in accordance with NFPA 59A; National Fuel Gas Code, latest edition. Boiler systems, site distribution, and HVAC equipment are not covered in this manual. Refer to the VA Steam Generation, Site Development, and HVAC Design Manuals.

Provide a solenoid valve in the natural gas supply line to the dental laboratory and the dental clinic operatories with an emergency shut-off valve at the exit in a conspicuous location for each area. The shutoff valve must be specifically designed and listed for this intended purpose at the system operating pressure, fuel type and location. Valve shall be the type that shuts off the flow of gas in the event of electrical current failure (normally closed). The valve remains closed until manually reopened.

Provide a solenoid valve in the gas supply to the kitchen area with an emergency shut-off located in the area. In addition to the kitchen emergency shutoff valve, a solenoid valve with automatic fire protection systems is required for automatic gas shutoff at each kitchen gas appliance served by a hood. Coordinate with the kitchen equipment drawings.

Provide a solenoid valve in the gas supply to gas fired equipment in the Mechanical Room with an emergency shut-off valve located in a conspicuous location near the exit.

---END OF CHAPTER---

10 SPECIALTY SYSTEMS

10.1 PLUMBING FOR BIOLOGICAL SAFETY LEVEL 3 LABORATORIES

(a) Design for Biological Safety Level 3 Laboratories shall be in accordance with the CDC BMBL Manual.

(b) All laboratory valves, gas cylinder manifold stations, vacuum system filters, and other plumbing equipment requiring service and maintenance shall be located in a secured location outside of the BSL-3 laboratory suite.

(c) Provide a dedicated hands-free (sensor) hand washing sink located near the exit from the laboratory and not in the vestibule.

(d) The suction side of the vacuum pump shall be piped to a 0.2-micron hydrophobic inline filter with a valve bypass prior as close as possible to the laboratory. Some mechanism for the decontamination of filters shall be incorporated into the design of the vacuum system.

(e) The vacuum pump discharge shall have a sampling port and shall be vented to the atmosphere in a secured location at least 3 m [10 ft.] above any accessible location.

(f) An emergency shower/eyewash station shall be within the same room as a chemical fume hood. The emergency shower/eyewash station shall not have a floor drain.

(g) An autoclave shall be made available inside the laboratory for decontamination purposes.

(h) All pipe penetrations shall be sealed water tight while maintaining fire rating of wall.

10.2 LABORATORY WATER SYSTEMS

(a) Clinical Laboratory Reagent Water (CLRW) must be monitored for resistivity, microbial content and total organic carbon.

- Ionic impurities: >10-megaohms-cm at 25 deg C [77 deg F]
- Microbiological Impurities: <10 CFU/ml
- Organic Impurities: Total organic carbon <500 ng/g (ppb)
- Particulate and Colloid Content: <0.22 micro m

(b) Special Reagent Water - base characteristics are the same as CLRW with additional requirements meeting manufacturer's specifications.

(c) Instrument Feed Water - water used by automated instruments for internal rinsing, dilution and water bath functions must be manufacturer's specifications.

(d) Autoclave Water – feed water for autoclaves and dishwashers with heat drying cycles should have low levels of inorganics, organic and particular impurities so as to leave little residue on washed lab ware. These specifications vary with type of equipment selected.

(e) VA authorities responsible for the oversight of Laboratory Systems shall be consulted during design.

10.3 PLUMBING FOR ANIMAL CARE (VIVARIUM) FACILITIES

(a) A floor or trench drain with an automatic water system shall be provided for large animal rooms. Holding rooms designed to accommodate fish tanks and/or rodent swim tanks shall be provided with a wall hydrant with backflow protection.

(b) Both potable and non-potable (industrial) water systems shall be provided. Reduced pressure zone backflow preventers (ASSE 1013) shall be installed on the industrial water to protect the potable water supply. Non-potable water piping shall be identified by color marking or metal tags in accordance with the IPC. At outlets, such as hose-connections, open ended pipes, or faucets providing non-potable water signage shall identify outlets as "non-potable water - not safe for drinking."

(c) Hot water serving animal care facilities shall be heated to 60 deg C [140 deg F] and tempered down to 51 deg C [124 deg F] for general distribution by master thermostatic mixing valves. Distribution at 60 deg C [140 deg F] is acceptable for lab areas where required to serve equipment. Hot water outlet temperature shall be controlled by properly adjusted limit stops at point of use control faucets/mixing valves. Separate water heaters should be utilized for cage washer applications, with 60 deg C [140 deg F] distribution.

(d) The minimum pressure at the farthest plumbing fixture is 240 kPa [35 psig]. A pressure-reducing valve shall limit maximum pressure at any plumbing fixture to 414 kPa [60 psig]. All water fittings shall be equipped with vacuum breakers.

(e) Potable water shall connect to all non-animal plumbing fixtures, emergency showers, and eye washes.

(f) The designer shall investigate the animal watering requirements for the facility. Unless directed otherwise, the minimum level of water treatment shall be done using a reverse osmosis process. Other treatment requirements may include ultraviolet (UV) sterilized, chlorination, and acidification processes.

(g) Oxygen, medical vacuum, and medical air shall be provided for the vivarium exam, treatment, and preparation rooms. Vivarium surgery rooms shall have oxygen, medical vacuum, medical air, nitrous oxide, and nitrogen. Necropsy shall be provided with oxygen and laboratory air. These systems must be separate from medical and dental systems.

10.4 HEMODIALYSIS WATER DISTRIBUTION SYSTEM DESIGN

10.4.1 General

It is critical that the water distribution system for hemodialysis meet the water quality guidelines stipulated by the most current Association for the Advancement of Medical Instrumentation (AAMI) guidance found in ANSI/AAMI/ISO Standards. During the design process, the plumbing designer must coordinate with the medical center and the medical director for the hemodialysis unit.

10.4.2 Hemodialysis Water Treatment System Description

(a) The incoming water supply temperature for dialysis treatment shall be within the range required by the hemodialysis water purification device manufacturer. The thermostatic mixing valve (ASSE 1017, ASSE 1069 or ASSE 1070) shall have a thermometer, normally closed bypass valve, and be accessible for maintenance and daily monitoring of supply temperature.

(b) Downstream of the thermostatic mixing valve, the water supply shall be protected by a reduced pressure backflow prevention device (ASSE 1013).

(c) A duplex booster pump package with lead/lag sequence control function may be necessary to maintain minimum supply pressure. This booster pump shall be controlled by a pressure switch.

(d) A water analysis may require an acid injection system to lower water pH level and maintain a pH level between 7.0 and 8.0. The acid injection system, if required, shall be placed upstream of the multi-media filtration equipment.

(e) After the backflow prevention device and booster pump package, the water shall enter a multi-media filtration system to remove particulate matter.

(f) Once the multi-media filtration equipment removes the fine particulate, the water shall pass through a water softener to reduce hardness and prolong life of the reverse osmosis membrane that is located further downstream.

(g) Upon leaving the multi-media filtration equipment, the water shall pass through primary and polishing carbon filters to remove chlorine and chloramines from the water.

(h) After the carbon filters, the water shall be treated by a reverse osmosis (RO) package and delivered into an optional RO storage tank. A low-level condition at the storage tank shall engage the RO equipment to fill the tank to the high-level position.

(i) A pure water re-circulating pump shall draw water from the tank and through an ultra-filtration system that includes ultra-violet (UV) light disinfection system to destroy and remove the remaining bacteria. Piping shall be in accordance with VA Master Specification 22 11 00 for dialysis water piping. Water shall be recirculated as close to the dialysis box as possible. Refer to VA Standard detail SD 22 40 00-17.

(j) 90 Degree fittings are prohibited in the piping system.

10.4.3 Hemodialysis Water Treatment Monitoring System

The hemodialysis water treatment equipment shall be installed to facilitate continuous monitoring of equipment and alarm status. Some water quality parameters shall be monitored at the start of each shift. The following points shall be monitored:

HEMODIALYSIS WATER TREATMENT MONITORING POINTS

Equipment	Local Monitoring	Remote Monitoring Engineering Control Center
Reduced pressure backflow preventer	Pressure drop, local inlet and outlet pressure gauges	
Thermostatic mixing valve	Local thermometer	
Acid feed system	pH level local indicator	Remote pH level indication
Multimedia filtration package	Pressure drop, local inlet and outlet pressure gauges	High pressure drop alarm
Water softener	Hardness level and salt level	Equipment status
Primary and polishing carbon tanks	Local indication of chlorine and chloramines levels, local alarm indication	Remote indication of chlorine and chloramines levels
Reverse osmosis package	Local indication of equipment status	Remote indication of equipment status
Deionizer/demineralizer package	Pressure drop, local inlet and outlet pressure gauges across each tank, equipment status	Remote indication of equipment status

10.5 PHARMACY PLUMBING REQUIREMENTS

(a) Floor drains and floor sinks shall not be installed in pharmacy clean rooms.

(b) A foot, elbow, or automatically operated sink for hand washing shall be located near the exit door of the anteroom. The controls shall have battery backup or be placed on emergency power.

10.6 STERILE PROCESSING (SPS)

Designers must ensure that incoming water quality meets sterile processing equipment manufacturer's specifications for microbial and chemical quality. Water quality can impact patient safety and efficacy of device reprocessing. Sterile processing departments must ensure water quality in a healthcare facility meets the needs for maintaining patient safety and preserving the life expectancy of instrumentation. VA authorities responsible for SPS shall be consulted during design.

10.7 SILVER RECOVERY SYSTEM

10.7.1 Automatic Film Processor

Each automatic film processor, except those serving dental x-rays, shall be connected to a central silver recovery system. An exception is that an isolated processor may be served by an individual recovery unit.

10.7.2 Silver Recovery Equipment

Silver recovery equipment is not in the contract and will be furnished by the medical center. This equipment includes a holding tank and silver recovery tanks with platforms, rectifier units

with shelf, storage cabinet, and worktable. This equipment will be housed in one room. Coordinate with the medical center.

10.7.3 Pipe Stub

Provide 40 mm [1.5 in.] pipe stub 150 mm [6 in.] above the floor at each automatic film processor to receive silver solution. Where possible, combine the silver solution piping into a single pipe for transport to the holding tank in silver recovery room. Pipe shall be capped 1.8 m [6 ft.] above finished floor where the holding tank is scheduled to be installed. Drain pipe shall be in accordance with VA Master Specification 22 66 00.

10.8 SHOP COMPRESSED AIR SYSTEM

Provide simplex air compressor to serve equipment and a minimum of one outlet on each wall in shop areas. The shop compressed air system shall include intake silencer, filter, after cooler, and receiver. Interior outlets shall be no farther apart than 7.6 m [25 ft.].

10.9 THERAPEUTIC POOL EQUIPMENT

10.9.1 Water Treatment System

Follow State and Local codes and regulations as well as the Association of Pool and Spa Professionals (APSP) and National Swimming Pool Foundation (NSPF) guidelines.

10.9.2 Pipes and Equipment

Use corrosion-resistant piping and equipment. Identify piping material on drawings.

10.9.3 Filter

Provide high rate 60 to 75 L/min per sq. m [15 to 20 gpm per sq. ft.] of filter surface area sand type, pressure filter.

10.9.4 Water Heater

Simplex shell and water coil heater shall have the capacity to heat pool water from 4 to 34 deg C [40 to 94 deg F] in 24 hours with water entering the pool at not more than 49 deg C [120 deg F]. Pool temperature shall be maintained between 24 and 27 deg C [75 and 80 deg F] for recreation purposes and between 30 and 34 deg C [86 and 94 deg F] for therapeutic purposes.

10.9.5 Disinfection

Feed calcium hypochlorite solution into pool with influent water by adjustable pump to maintain a free chlorine residual level between 1.0 and 3.0 mg/L [1.0 and 3.0 ppm] or as required by Authorities Having Jurisdiction (AHJ).

10.9.6 pH Balancing

pH shall be maintained between 7.2 and 7.8, with 7.4 to 7.6 pH being the ideal range.

10.9.7 Recirculating Pump

Pump shall have the capacity to re-circulate entire contents of pool in 6 hours.

10.9.8 Equipment Room

Locate pool equipment in enclosed space one floor below pool room elevation or in an enclosed underground vault for pools on grade. Entrance to pool equipment room should be

from pool apron and be lockable. Pool equipment room should include interior light, sump pump and access ladder.

10.9.9 Vacuum Cleaning Equipment

VA medical center will provide portable vacuum cleaning equipment. Do not design pool re-circulating pump for cleaning.

10.10 LAUNDRY

10.10.1 Laundry Equipment

All laundry equipment, including water treatment and heaters, is provided by the medical center unless noted otherwise. Provide utilities to serve the laundry equipment and toilet areas. The water supply for laundry use shall be provided with a meter.

Laundry equipment heaters are designed and provided by separate contract (VA will furnish and install in conjunction with laundry equipment). The remainder of the laundry building shall be served with a simplex heater as described in Article 4.2.3 Water Heaters for Non-Patient Care Buildings.

10.10.2 Floor Sinks and Floor Drains

Provide a minimum of one floor sink and one floor drain for the laundry facility, regardless of size.

10.10.3 Dedicated Sump

For laundry facilities or rooms with more than three washing machines, provide a dedicated sump with duplex grinder pumps in a lead lag configuration with each pump sized for 100 percent of the load. The sump discharge would then be hard-piped into the sanitary sewer.

10.11 WATER SOFTENING SYSTEM

10.11.1 Softener

Design vertical, pressure-type, sodium cycle water softeners to comply with the following and Master Specification 22 31 11, WATER SOFTENERS. Regeneration shall occur no more than once per day. Provide bypass. Size water softener as recommended in ASPE Data book, Volume 4, Plumbing Components and Equipment.

10.11.2 When Required

(a) **Entire medical center:** Provide softening equipment when total hardness exceeds 170 mg/L [170 ppm] as CaCO3. Blend equipment effluent to a hardness of approximately 50 mg/L [50 ppm]. Design triplex softeners, each furnishing 50% of the maximum flow rate and exchange capacity. Provide a hard water bypass.

(b) **Steam cooking equipment:** Provide softening equipment when total hardness exceeds 30 mg/L [30 ppm]. Design simplex softener and a hard water bypass. Locate regeneration alarm in office of dietitian.

(c) **Hot-water supply:** Provide softening equipment when total hardness exceeds 50 mg/L [50 ppm]. Design triplex softeners, each furnishing 50% of the maximum flow rate at an exchange capacity required for peak boiler feed-water make-up. Locate regeneration alarm in office of boiler plant operator.

(d) Pretreatment to reverse osmosis package. Refer to Article 10.4 and 10.12.

10.11.3 Salt Storage

When softened water is needed for the entire medical center, a storage facility with exterior access shall be provided. Ensure total capacity is large enough to accommodate a three-month supply of salt. Locate the salt storage facility adjacent to a service road, preferably adjacent to the softener room.

When soft water is required for dietetic or boiler use, designate/reserve interior floor space in the dietetics storage areas for 180 kg [400 pounds] of salt near softeners.

10.11.4 Dealkalizing Equipment

As water analysis dictates, design a single chloride-anion pressure-type water-dealkalizing tank for boiler feed-water make-up to follow water softening equipment. Provide soft water bypass. System shall comply with Master Specification 22 67 21, Water Dealkalizing System and the following.

10.11.5 Dealkalizer Tank

Dealkalizer Tank shall provide 113 L/min [30 gpm] maximum flow rate with a capacity of 37,850 L [10,000 gallons] per day to reduce alkalinity to 20 mg/l [20 ppm].

10.11.6 Brine and Caustic Soda Tanks

Design a separate measuring tank of sufficient size to furnish amount of saturated salt and caustic soda solution required for one regeneration. Caustic soda shall be approximately 10% by weight of total solution. Designate interior floor space for caustic storage.

10.11.7 Miscellaneous

Locate regeneration alarm bell in boiler plant office.

Provide emergency shower and eye/face wash (P-707) adjacent to equipment.

10.12 REAGENT GRADE WATER SYSTEMS

10.12.1 Floor Space for Central Reagent Grade Equipment

As water analysis dictates, provide floor space for central reagent grade equipment. Design the piping system from the equipment room to the outlets. Equipment (pretreatment, reverse osmosis, buffer tank, deionizer, or a combination) shall be furnished as part of the project for every significant upgrade or new installation project. Design piping to provide continuous loop to within 150 mm [6 inches] of outlet, or to the base of the faucet.

10.12.2 Floor Space for Regenerant Chemicals

Assign floor space for storing 30 days' supply of regeneration chemicals.

10.12.3 Emergency Shower and Eye/Face Wash

Provide emergency shower and eye/face wash in equipment room.

10.12.4 Negative Pressure Ventilation

Coordinate with HVAC system designer to provide adequate negative pressure ventilation.

10.12.5 Chemical-Resistant Piping and Drains

Provide chemical resistant piping and drains in accordance with VA Master Specification Sections 22 66 00, Chemical-Waste Systems for Laboratory and Healthcare Facilities and 22 11 00, Facility Water Distribution.

10.13 PLUMBING FOR PARKING STRUCTURES

10.13.1 Water Distribution Systems

A dry pipe system shall serve a dry wall hydrant on each floor in locations subject to freezing. In locations not subject to freezing conditions, a wet pipe system is an option.

Provide wet exterior non-freeze wall hydrants to be used for minimal irrigation, cleaning walks, etc. Locate wall hydrants a maximum of 61 m [200 ft.] apart, with a minimum of one wall hydrant on each exterior wall.

10.13.2 Storm Drainage Systems

Drainage calculations shall be based on a 100-year, 1-hour rainfall (inches) per IPC or as required by local code. Use trench drains and/or type “Y” floor drains with sediment buckets.

Provide all needed water quality such as sand/oil separation and quantity measures as required by the local authorities having jurisdiction (AHJ).

---END OF CHAPTER---

APPENDIX 11-A: VA HOSPITAL BUILDING SYSTEM

11-A.1 DESCRIPTION OF MODULES

11-A.1.1 Introduction

The Redbook proposes a systematic or modular approach to the design of new hospital buildings where building systems are integrated into the planning modules from the start. Service modules are defined as one-story units of building volume with a footprint of approximately 930 square meters (sq. m) [10,000 square feet (sq. ft.)]. More recent designs have used service modules in the range of 1,860 sq. m [20,000 sq. ft.]. Each module is comprised of structural bays, a service zone, and a functional zone (often subdivided into space modules). Each service module is completely self-contained or combined with one or more other modules in a fire compartment.

11-A.1.2 Structural Bays

The structural bay is the basic unit of which all other modules are comprised. The dimensions of the structural bay are influenced by the functional layout, service zone clearances, and the type of structural system selected.

11-A.1.3 Service Zones

A service zone includes a full height service bay (with independent mechanical, electrical, and telecommunications rooms) and an independent service distribution network that includes an interstitial space above the functional zone.

11-A.1.4 Functional Zones

The functional zone is the occupied floor area within a service module. Space modules are subdivisions of the functional zone.

11-A.1.5 Fire Compartmentation

A fire compartment is a unit of area enclosed by a two-hour rated fire-resistant construction on all sides, from which there are at least two different exits.

11-A.1.6 Plumbing Utilities

The Redbook describes the plumbing supply and return risers being grouped together at one end of the service bay.

The horizontal sanitary waste pipes drain toward the service bays and connect to two or more waste stacks located in the service bay.

The storm drain follows the same concept as the sanitary waste.

11-A.2 ZONING OF PLUMBING SYSTEMS

The water heaters are centrally located in one or more equipment rooms in a location prescribed in the physical security manuals for Mission Critical or Life Safety Protected facilities.

The medical air, oxygen, and medical vacuum systems are usually located at the medical center's central utility building or basement mechanical room in a location prescribed in the physical security manuals for Mission Critical or Life Safety Protected facilities.

11-A.3 REFERENCES

1 Development Study-VAHBS (Red Book – revised 1976)
2 Supplement to Development Study (2006)

---END OF APPENDIX---

APPENDIX 11-B: COMPUTER AIDED FACILITIES MANAGEMENT (CAFM)

11-B.1 CAFM AND EQUIPMENT SCHEDULE UTILIZATION

11-B.1.1 Introduction

The requirement for access to a master digital database drives the need to compile all A/E design data (not limited to plans, specifications, calculations, equipment selection, equipment submittal, commissioning/balance reports, and job-related communications), whether in letter or email format, in a digital, electronic format from the very start of a project. Thus, this need for digital data will affect the requirements for submission (see Design Submission Requirements).

11-B.1.2 Submission Requirements

While VA may not have determined the complete software architecture defined yet for the ultimate CAFM configuration, the A/E is to begin the digital submission process now.

11-B.1.3 Electronic Documentation

The electronic documentation and copies of the calculations, equipment selections, operations and maintenance manual, approved submittals, shop drawings, and other closeout documentation shall be prepared by a computer software program complying with Section 508 of the Rehabilitation Act of 1973, as amended (29 U.S.C 794d). The manufacturer or vendor of the software used to prepare the electronic documentation shall have a Voluntary Product Accessibility Template (VPAT) made available for review by VA and included as part of the submittal requirements. All available accessibility functions listed in the VPAT shall be enabled in the prepared electronic files. Because Adobe Acrobat is a common industry format for such documentation, it is recommended that the A/E review and follow as a minimum requirement the document "Creating Accessible Adobe PDF files, A Guide for Document Authors", that is maintained and made available by Adobe free of charge.

11-B.1.4 Schedules

(a) The equipment and other schedules that previously appeared in the VA Technical Information Library (TIL) under the National CAD Standards as either .dwf or .dwg files have been converted into Excel spreadsheet files (.xls), and are still located in the CAD section of the TIL. The schedules shall be downloaded for use.

(b) The schedules all have a similar layout for consistent data presentation. Notes for special requirements are listed below. Positioning the cursor over column headings will cause pop-up notes to appear which contain recommended methodologies for determining the information to be input into that column. Columns may be hidden for use later in the design/construction process, and throughout the life of the equipment. The first few hidden columns will be filled out by the contractor and include data such as the equipment make, model and serial numbers. Other columns will be filled out by the test and balance agent and include the belt and sheave information.

(c) Initial use of the schedules is for equipment selection and listing. Completed schedules can then be inserted into project CAD drawings. Copies of the Excel files will be given to

the successful contractor to fill in data from approved submittals, equipment suppliers, or bills of material. These modified schedules will then be inserted into the final as-built CAD drawings, to become part of the ultimate CAFM database. The hidden columns can be revealed by the facilities management group for their purposes.

(d) Full calculation sets for equipment selection are called for in the A/E Submission Requirements. These calculations will also appear in the pop-up data boxes to provide easy access later when used in the CAFM system.

(e) The Excel schedule files and CAFM data shall formalize version tracking throughout all successive iterations.

---END OF APPENDIX---

APPENDIX 11-C: A/E SUBMISSION REQUIREMENTS AND PLUMBING DESIGN MANUAL COORDINATION

11-C.1 GENERAL

11-C.1.1 Introduction

In this appendix, specific tasks outlined in the A/E Submission Instructions, Volumes B, C, D, E and F, (Program Guide, PG-18-15) at various submittal stages of the design process are presented and related to the contents of this design manual. This effort substantiates and supplements the submission requirements, while providing in-depth insight into the submission needs.

11-C.1.2 Coordination

Coordination between the submission requirements and the design manual is mandatory. Variations and deviations from the prescribed submission task may be permitted on a case-by-case basis, if and where deemed necessary to meet the project-specific scope of work. Such variations and deviations must be submitted in writing for prior approval by VA Authorities.

11-C.1.3 Compliance Requirements

For each submittal, the A/E shall forward to the VA Authorities a detailed list of the submission requirements with notations indicating full or partial compliance. The list shall also detail the A/E's justification for any deviation from the requirements.

11-C.1.4 BIM Requirements

See The VA BIM Guide available on CFM's TIL.

11-C.1.5 Specific Drawing Requirements

Where applicable, the contract drawings shall include those listed below. For uniformity, drawings shall be arranged in the order listed. See the VHA National CAD Standards (NCS) Application Manual for more organization detail.

- PP – 0xxx General Notes, Abbreviations, and Symbols (VA-Compliant)
- PD – 1xxx Demolition of Existing Plumbing Work, Floor Plans, If Applicable. Minor Demolition May Be Shown on New Construction Drawings. Extensive Demolition Requires Drawings for Demolition Only
- PS – 1xxx Plumbing Site Plan
- PP – 1xxx Plumbing Supply Distribution, Cold Water, Cold Water Return, Hot Water, Hot Water Return, Medical Air, Vacuum, Gas, Softened Water, Filtered Water, RO, and DI Water
- PP – 2xxx Plumbing Piping Large-Scale Partial Plans of Kitchens, Laboratories, Bathrooms, Restrooms, and Other Areas with Dense Plumbing Services and Connections
- PP – 3xxx Plumbing Piping Riser Diagrams, Sections for Supply and Return Piping
- PP – 4xxx Plumbing Standard Details (VA-Compliant)
- PP – 5xxx Plumbing Standard Schedules (VA-Compliant)

- PP – 6xxx Plumbing Flow Diagrams for Medical Air, Medical Vacuum, and RO Systems
- PP – 7xxx Plumbing System Control Diagrams, Sequence of Operations, and Points Lists
- PL – 1xxx Plumbing Waste, Drain, and Vent Piping
- PL – 2xxx Plumbing Waste, Drain, and Vent Isometrics

Room numbers and names shall be shown on the plumbing plans at every review stage, including schematic submission. Where there is insufficient room on the plan view to show room names, room numbers only may be shown on the plan, with the room number and name tabulated on the drawing.

11-C.1.6 Equipment Schedules

Where used, equipment schedules shall be listed in the following order, vertically, from right to left, to facilitate checking and future reference. The schedules would be placed on the sheet starting at the right edge of the sheet since the drawing set in bound on the left side. Refer to Appendix 11-B for equipment schedule utilization. For each item in a schedule, show the basis of design, including the manufacturer and model number selected. Include information e.g., the basis of design in a bound submission and organized by section as described in the chart at the end of this Appendix.

- Plumbing Fixture Schedule
- Water Filter Schedule
- Water Softener Schedule
- Domestic Water Thermal Expansion Tank Schedule
- Plumbing Pump Schedule
- Plumbing Package Booster Pump Schedule
- Storage Tank Schedule
- Electric Water Heater Schedule
- Gas-Fired Water Heater Schedule
- Steam to Hot Water Heat Exchanger Schedule
- Liquid to Liquid Heat Exchanger Schedule
- Storage Tank with Heat Exchanger Schedule
- Steam Booster Hot Water Heat Exchanger Schedule
- Packaged Reverse Osmosis Schedule
- Deionization Package Schedule
- Gas Pressure Regulator Schedule

- Food Service Steam/Gas Demand Schedule
- Equipment Connection Schedule
- Compressor Air System Schedule
- Vacuum Pump System Schedule
- Gas Manifold Systems
- Vibration Isolation Schedule

11-C.1.7 Schematic Design Level 1 (SD1) Submission Requirements

The following describes the submission requirements for schematic level 1 (SD1) in addition to requirements listed in PG 18-15 Vol. B for Major Projects, and Vol. C for Minor and NRM Projects.

(a) **Code Review, Summary:** Perform a code review summary narrative, including requirements for grease traps and storm water management systems. The International Plumbing Code (IPC) shall be used.

(b) Obtain existing and finished grades on a topographical plan, as well as temporary or intermediate grades used for any purpose.

(c) Obtain soil boring information, including ground water level.

(d) Based on schematic design level 1 architectural programming information, create a schematic design level SD1 fixture count schedule. For specialized fixtures and equipment, obtain maximum instantaneous flow rates. Obtain SD1 level maximum instantaneous flow rates for items such as landscaping (if supplied by building water), cooling tower, and mechanical equipment makeup. Calculate the SD1 level water supply fixture unit water load and convert it to gallons per minute (gpm) flow rate.

(e) If required for a direct connection to a municipal water connection and in concert with the project civil engineer, prepare a formal letter to the water utility requesting the following information for the project files:

- site plan from the utility company showing all water mains adjacent to the site
- depth of the bury of the water mains based on the datum taken from the site plan
- static and residual pressure in the water main
- requirements for location of domestic meter assembly installations
- requirements for pipe material
- breakdown of work performed by the utility and any work required by the contractor
- requirements for backflow preventers
- minimum depth of bury acceptable for water mains in the jurisdictions

(f) Assess the need for increasing water pressure in the facility and required floor space for

any required booster pumping package.

(g) Select meter and backflow preventer assembly locations.

(h) Select oxygen tank location, if required.

(i) Describe building supply piping pressure zoning design.

(j) Describe the concept for storm sewer system design.

(k) Describe the concept for sanitary sewer design.

For renovation projects, the plumbing engineer shall submit a narrative describing the existing plumbing utilities and services and making recommendations for replacement or reconditioning of fixtures.

For all projects, conduct a formal meeting with operations staff to determine the capacity for medical center campus medical air, vacuum, and other specialized services.

Prepare a utility study that summarizes the available capacity of all utilities and services required for the project. Interviews and anecdotal evidence shall not form the basis for engineering decision making. Tests shall be conducted to determine available utility capacity.

The utility study should include design decisions for the type of sensor operated faucets, scope of safety showers, eyewash stations, etc. The scope for demolition shall be defined in the study. The status of salvaged equipment, owner furnished equipment, owner installed equipment, pre-purchased equipment, seismic requirements, and PG-18-13 Barrier Free Design Guide requirements.

11-C.1.8 Schematic Design Level 2 (SD2) Submission Requirements

The following describes the submission requirements for schematic design level 2 (SD2) in addition to requirements listed in PG 18-15 Vol. B for Major Projects, and Vol. C for Minor and NRM Projects.

- Identify zones where acid waste would be installed.

11-C.1.9 Design Development Level 1 (DD1) Submission Requirements

The following describes the submission requirements for Design Development level 1 (DD1) in addition to requirements listed in PG 18-15 Vol. B.

(a) On plumbing plans, identify locations where utilities enter building and where sanitary sewer and storm sewer will exit the building.

(b) Prepare discipline coordination document provides the following information to other design team members:

- Natural gas loads to Civil Engineer
- Building service water line size and water supply fixture unit totals to Civil Engineer.
- Building sanitary and storm sewer line size and waste fixture unit totals to Civil Engineer

- Plumbing equipment electrical requirements to Electrical Engineer
- Oxygen demand to Medical Center
- Medical gas and vacuum demand to Medical Center
- Compressed air demand to Medical Center
- Space requirements to Architect
- Available water makeup line location to Mechanical Engineer
- EMCS point data to Mechanical Engineer

11-C.1.10 Design Development Level 2 (DD2) Submission Requirements

The following describes the submission requirements for Design Development level 2 (DD2) in addition to requirements listed in PG-18-15 Vol. B for Major Projects, and Vol. C for Minor and NRM Projects.

(a) Update design narrative to reflect building programming changes.

(b) On plumbing plans, update sources for medical air, gas, and vacuum from DD1.

(c) On plumbing plans, update locations where utilities enter building and where sanitary sewer and storm sewer will exit the building.

(d) Submit outline specifications with important notes specific to the project.

11-C.1.11 Construction Document Level 1 (CD1) Submission Requirements

An updated design narrative that addresses comments from the design development level 2 (DD2) in addition to requirements listed in PG 18-15 Vol. B for Major Projects, and Vol. C for Minor and NRM Projects.

Complete plumbing plans that includes the following data:

- Completed and cross-referenced water supply riser diagrams with room numbers, plumbing fixtures, and equipment identified
- Plumbing specifications based upon a redlined set of VA Master Specifications. The redlined set shall clearly identify modifications, deletions, and insertions. All deviations from the master specifications shall be submitted to the VA Authorities for approval with explanations for the deviations

Binder Division	Submission Requirements
Tab 1	Building service water pipe size calculations. Peak building water demand calculation.
Tab 2	Pressure zone design calculations
Tab 3	Cold water (potable, laboratory, and industrial) pipe size calculations.
Tab 4	Hot water pipe size calculations.
Tab 5	Water softening equipment demand and pipe size calculations. Basis of design equipment selection, cut-sheets.
Tab 6	Reverse osmosis equipment demand and pipe size calculations. Basis of design equipment selection, cut-sheets.

Binder Division	Submission Requirements
Tab 7	Water demineralization (deionization equipment demand calculations.
Tab 8	Hot water re-circulating and boosters pump size calculation. Pump basis of design cut-sheet and pump curves.
Tab 9	Hot water generation calculations, heat exchanger equipment size calculations, and hot water storage calculations. Hot water generation and heat exchanger equipment cut-sheets and basis of design. Include domestic solar water heating calculations.
Tab 10	Thermal expansion, hot water storage, and pure water buffer tank size calculations.
Tab 11	Booster heater demand calculations for areas such as Dietetics. Basis of design hot water generation and heat exchanger equipment selection cut-sheets.
Tab 12	Therapeutic pool (filtering and heating demand calculations).
Tab 13	Soil, waste, and vent pipe size calculations.
Tab 14	Storm drainage pipe sizing calculations with roof or drainage areas identified.
Tab 15	Grease, hair, oil interceptor size calculations. Interceptor basis of design equipment selection and cut-sheets.
Tab 16	Sump pump system design calculations, sump basis of design equip. selection and cut-sheets.
Tab 17	Fuel gas pipe sizing.
Tab 18	Medical vacuum demand, pipe size, and equipment size calculations. Medical vacuum basis of design equipment selection, cut-sheets.
Tab 19	Medical air demand, pipe size, and equipment size calculations. Medical air basis of design equipment selection, cut-sheets.
Tab 20	Oxygen storage demand and pipe size calculations.
Tab 21	Shop and lab compressed air pipe size calculations. Air compressor basis of design equipment selection, cut-sheets.
Tab 22	Shop and lab vacuum pipe size calculations. Vacuum pump basis of design equipment selection, cut-sheets.
Tab 23	Nitrogen and other compressed gas storage demand and pipe size calculations.
Tab 24	Nitrous oxide pipe size calculations.
Tab 25	Oral evacuation and dental system calculations, basis of design equipment selection, cut-sheets.
Tab 26	Silver recovery piping.

---END OF APPENDIX---

APPENDIX 11-D: SCHEMATIC DIAGRAMS

11-D.1 INTRODUCTION

In this Appendix, typical diagrams of plumbing equipment and systems are provided. Coordinate mixing valve and heater piping requirements with manufacturer's requirements.

11-D.1.1 Master Thermostatic Mixing Valve

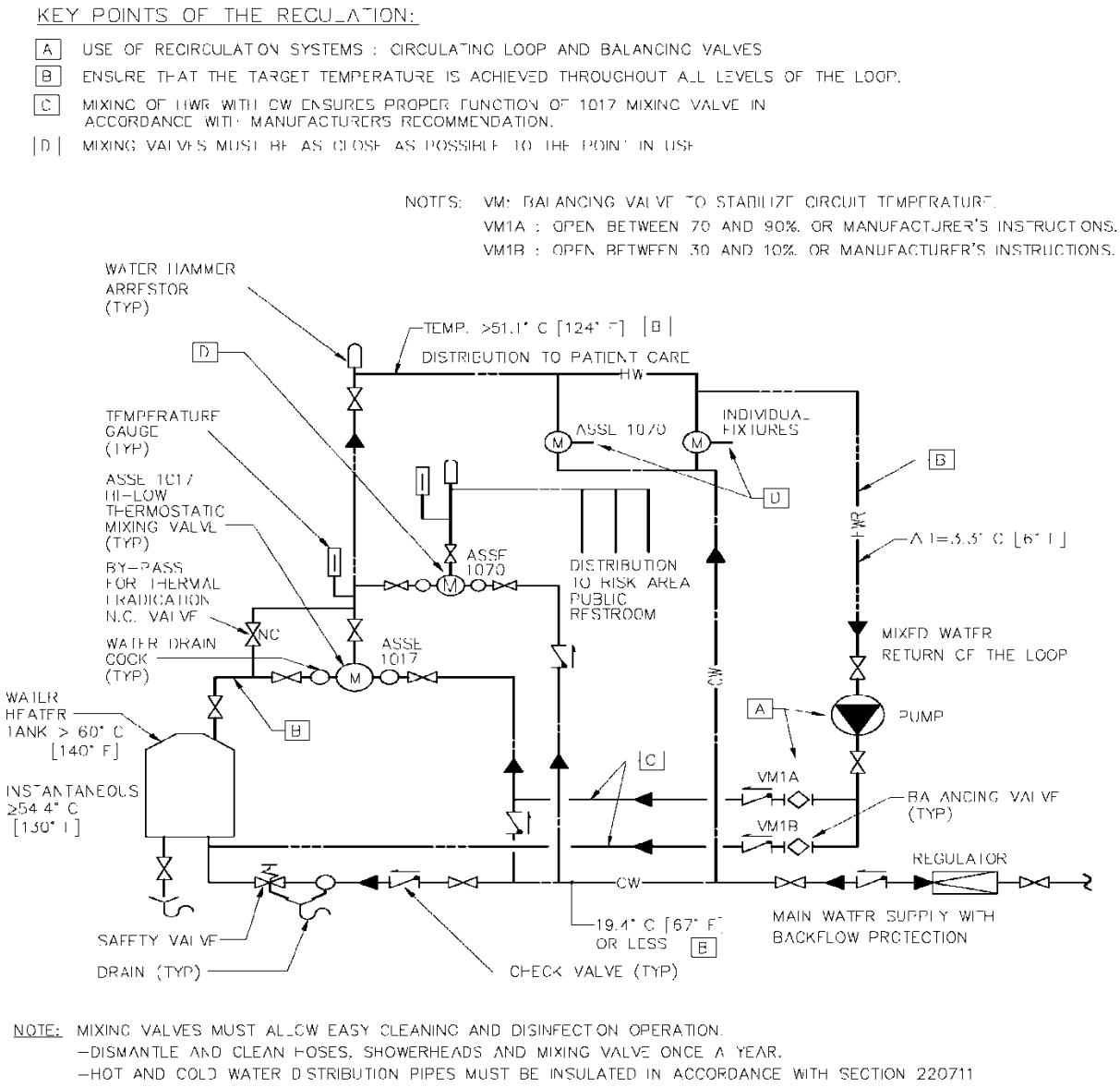

11-D.1.2 Temporary Eradication System Connection

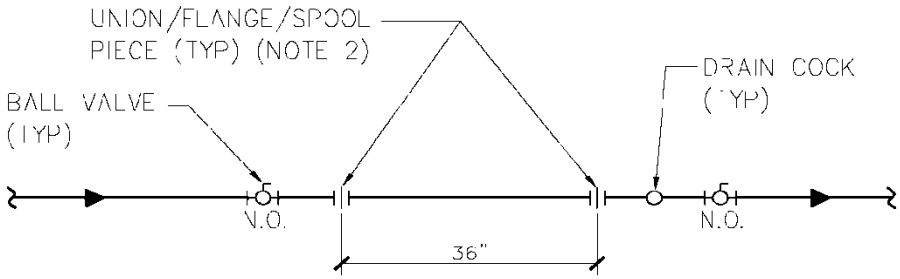

TYPICAL HOT WATER SYSTEM NORMAL OPERATION

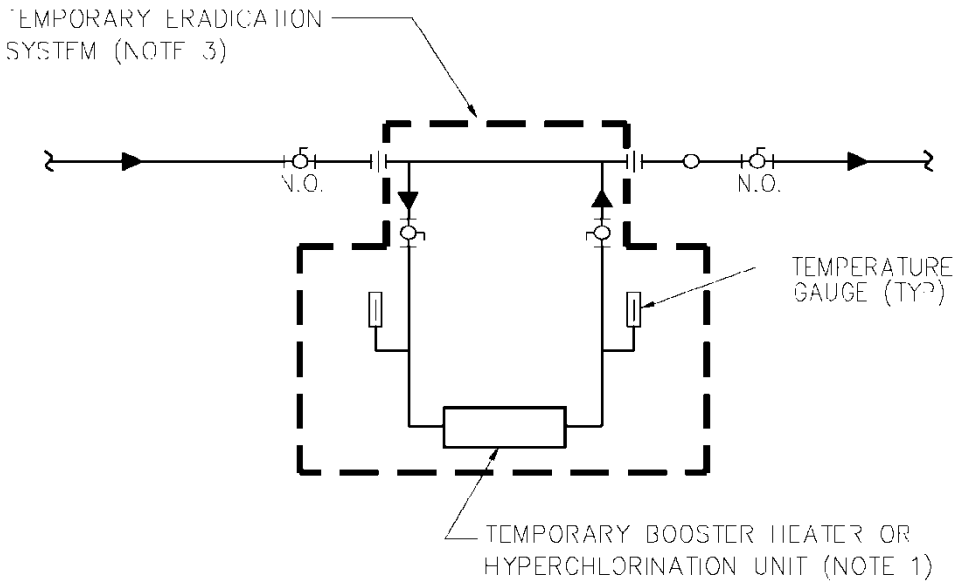

TYPICAL HOT WATER SYSTEM WITH TEMPORARY ERADICATION SYSTEM

NOTES:

1. COORDINATE ELECTRICAL POWER REQUIREMENTS. PROVIDE DISCONNECT AND JUNCTION BOX FOR TEMPERATURE CONNECTION.
2. INSTALL SPOOL PIECES AS CLOSE TO BALL VALVE AS POSSIBLE.
3. MINIMIZE RUNOUT LENGTH OF TEMPORARY PIPING

TEMPORARY ERADICATION SYSTEM CONNECTION

11-D.1.3 Cold Water / Hot Water Connection of Plumbing Fixture

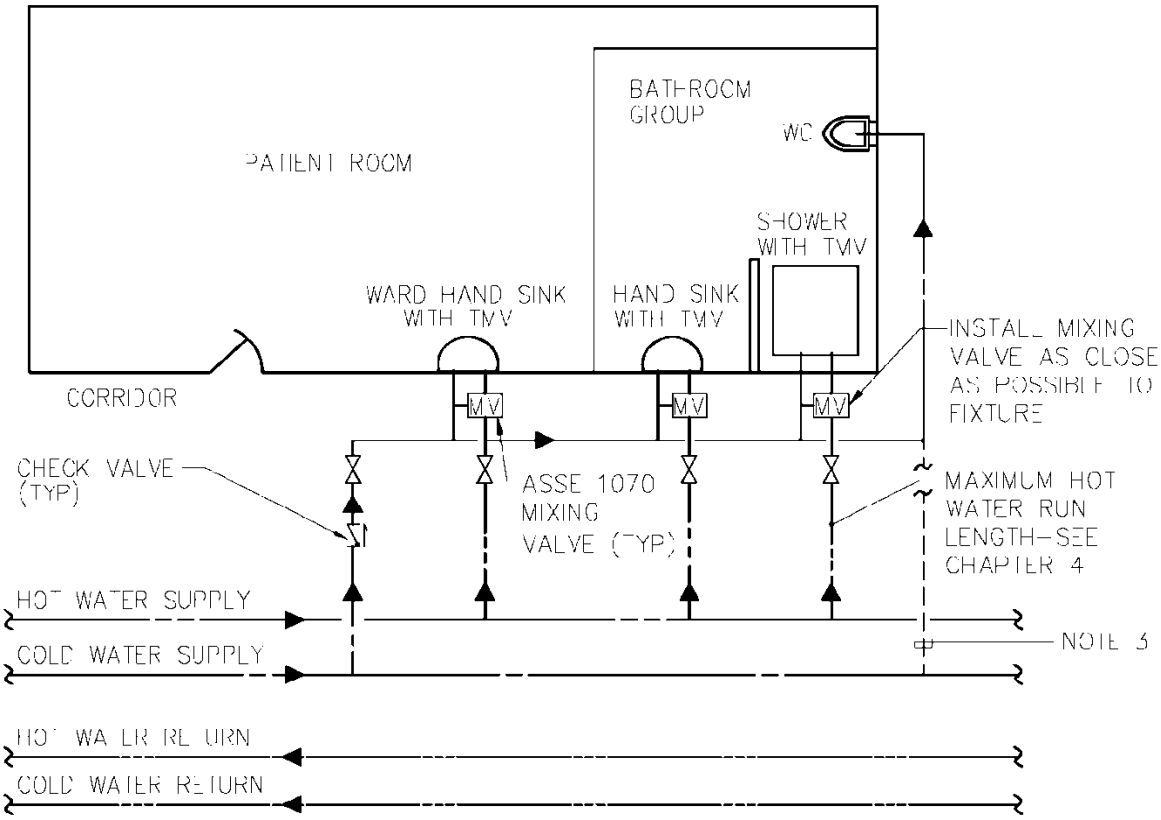

NOTES:

1. MINIMIZE COLD AND HOT WATER FIXTURE RUN-OUT DISTANCE BY LOCATING FIXTURES AS CLOSE AS PRACTICAL TO HOT WATER AND COLD WATER BRANCH LINES.
2. RECIRCULATION OF CW AND HW SUPPLY CLOSE TO FIXTURE IS NECESSARY WHEN MAXIMUM FIXTURE RUN-OUT LENGTH IS EXCEEDED.
3. SUPPLY TO W.C. MAY REQUIRE SEPARATE LINE FROM CW SUPPLY WHEN W.C. NOT USED DAILY OR EXCEEDS MAXIMUM FIXTURE RUN-OUT LENGTH. REFER TO CHAPTER 4.

COLD WATER / HOT WATER CONNECTION OF PLUMBING FIXTURES

11-D.1.4 Acid Waste Neutralization System

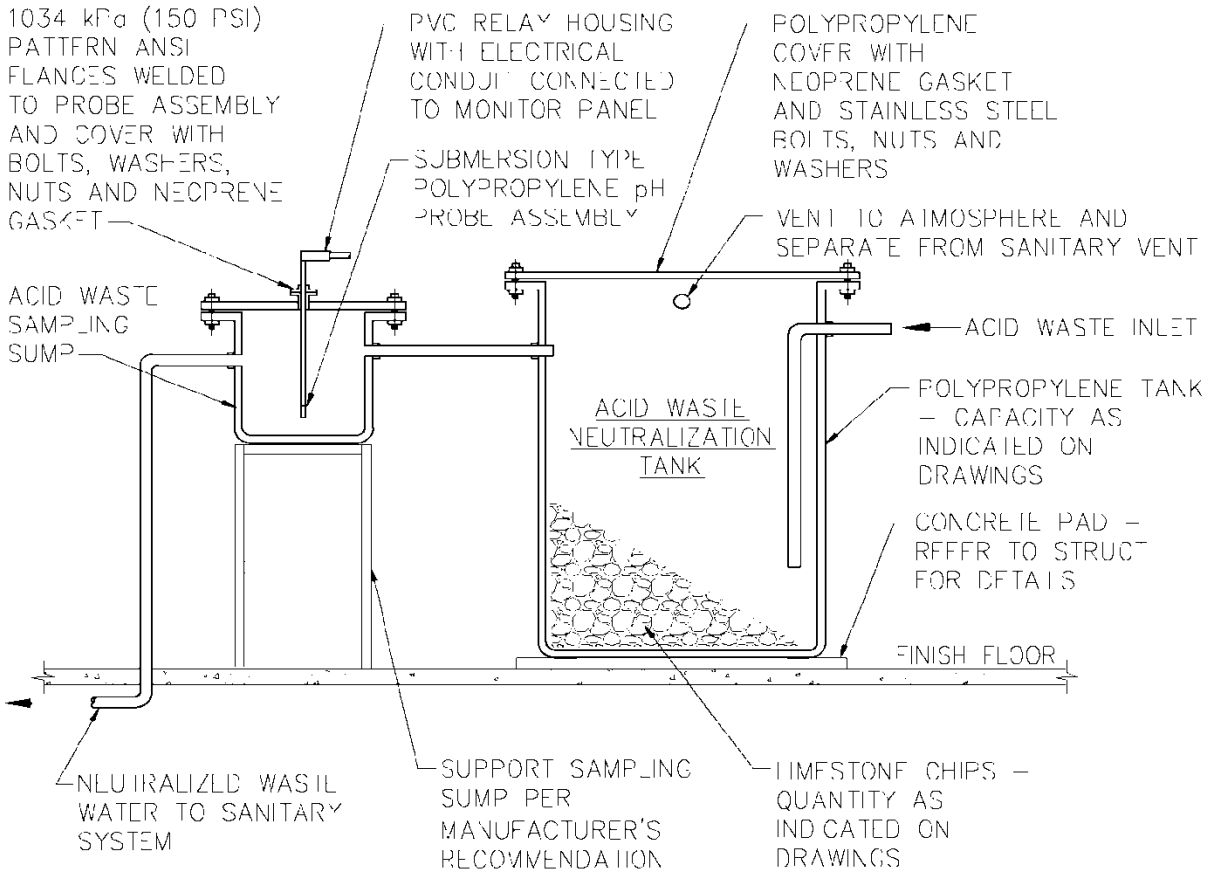

ACID WASTE NEUTRALIZATION SYSTEM

11-D.1.5 Hot Water / Hot Water Return Pipe Routing in a Typical Ward

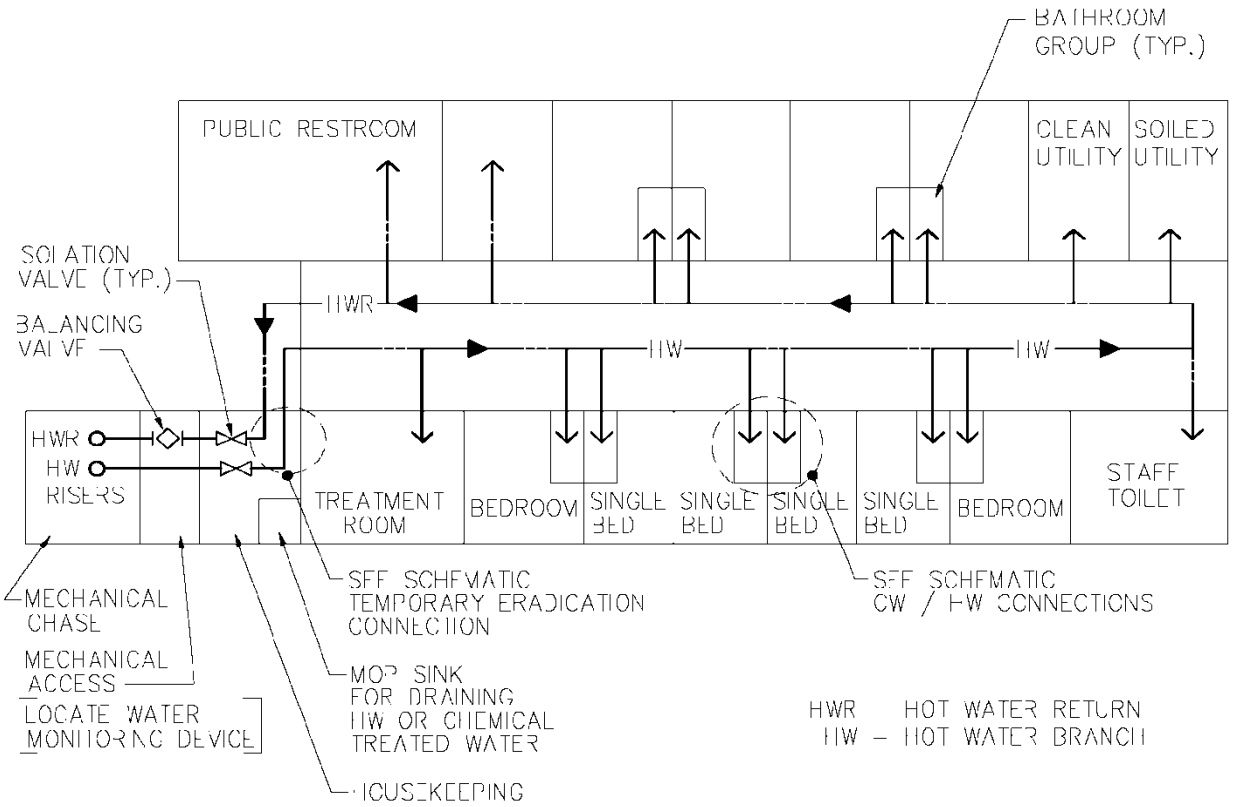

NOTES:

1. PROVIDE ENGINEERING WITH ABILITY TO ISOLATE SECTIONS FOR ERADICATION.
2. VALVES ALLOW WARD TO BE ISOLATED FROM REST OF POTABLE WATER SYSTEM.

HOT WATER / HOT WATER RETURN PIPE ROUTING IN A TYPICAL WARD

11-D.1.6 Hot Water Circulation with Master Thermostatic Mixing Valve

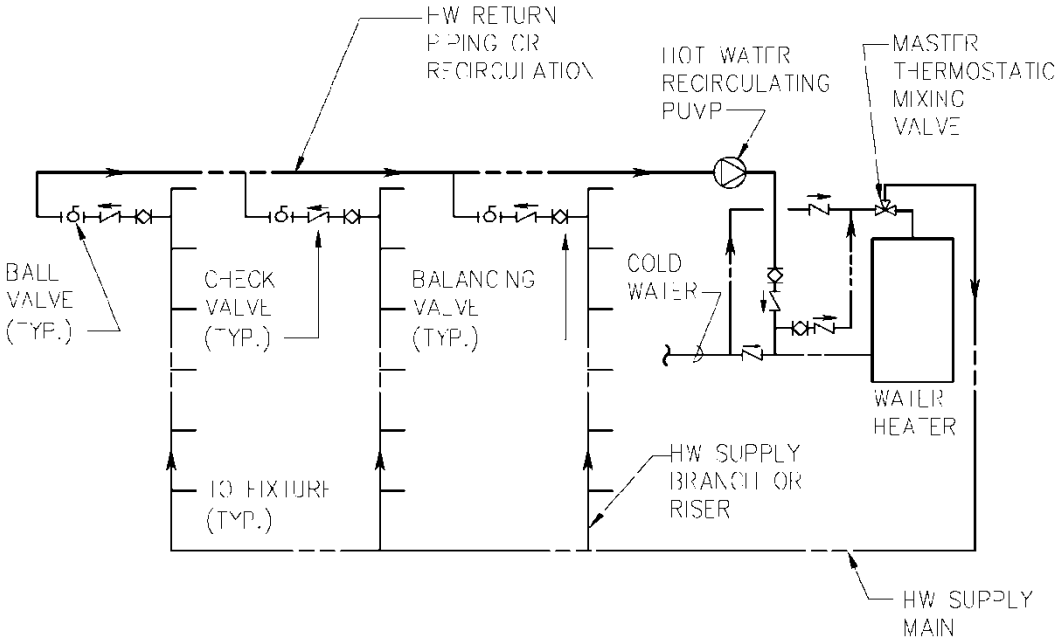

HOT WATER CIRCULATION WITH MASTER
THERMOSTATIC MIXING VALVE

---END OF APPENDIX---

APPENDIX 11-E: SERVICE PIPE SCHEDULE

11-E.1 PIPE SERVICE, MATERIAL, FITTINGS AND JOINTS

SERVICE	FIBERGLASS FILAMENT WOUND	SCHED 40 BLACK STEEL	CAST IRON –HUB & SPIGOT	CAST IRON –NO HUB	DUCTILE IRON AWWA C151	CPVC CHEMICAL WASTE	SCHED 80 PVC	SCHED 40 PVC	POLYPROPYLENE (FUSION JOINT)	COPPER TYPE K	COPPER TYPE L	COPPER DWV ASTM B 306	CHROME PLATED BRASS	STAINLESS STEEL ASTM A269	STAINLESS STEEL ASTM 312	STAINLESS STEEL 316	POLYETHYLENE TUBING	PVDF	GALVANIZED STEEL	HIGH SILICON IRON	BOROSILICATE GLASS PIPE (BSG)
FACILITY WATER DISTRIBUTION																					
SERVICE CONNECTIONS TO BLDG ≥3” (NOTE 1)					X																
SERVICE CONNECTIONS TO BLDG <3” (NOTE 1)										X											
INTERIOR DOMESTIC WATER PIPING (NOTE 1)										X	X										
INTERIOR DOMESTIC WATER PIPING >6” (NOTE 1)															X						
TRAP PRIMER WATER PIPING (NOTE 1)										X											
EXPOSED PIPING IN FINISHED ROOMS (NOTE 1)													X								
FACILITY SANITARY AND VENT PIPING																					
CAST IRON DWV BELOW GRADE, ABOVE GRADE, AND 5’ OUTSIDE OF BUILDING (NOTE 2)			X	X																	
COPPER DWV – ABOVE GROUND (NOT URINAL DRAIN) (NOTE 2)												X									
PVC DRAIN PIPE (EXCEPT AS INDICATED IN PARA. 2.1) (NOTE 2)								X													
PUMP DISCHARGE PIPING (NOTE 2)											X								X		
EXPOSED PIPING IN FINISHED ROOMS (NOTE 2)													X								
FACILITY STORM DRAINAGE																					

SERVICE	FIBERGLASS FILAMENT WOUND	SCHED 40 BLACK STEEL	CAST IRON –HUB & SPIGOT	CAST IRON –NO HUB	DUCTILE IRON AWWA C151	CPVC CHEMICAL WASTE	SCHED 80 PVC	SCHED 40 PVC	POLYPROPYLENE (FUSION JOINT)	COPPER TYPE K	COPPER TYPE L	COPPER DWV ASTM B 306	CHROME PLATED BRASS	STAINLESS STEEL ASTM A269	STAINLESS STEEL ASTM 312	STAINLESS STEEL 316	POLYETHYLENE TUBING	PVDF	GALVANIZED STEEL	HIGH SILICON IRON	BOROSILICATE GLASS PIPE (BSG)
CAST IRON PIPE BELOW GRADE, ABOVE GROUND, AND 5' OUTSIDE OF BUILDING (NOTE 3)			X	X																	
COPPER DWV – DRAINAGE ABOVE GROUND (NOTE 3)										X											
STORM SEWER PIPE FOR SINGLE STORY (NOTE 3)								X													
PUMP DRAIN < 4" (NOTE 3)										X	X										
PUMP DRAIN PIPING > 4" (NOTE 3)																			X		
ROOF DRAIN WITH CLAMPING DEVICE (NOTE 3)				X																	
GENERAL SERVICE COMPRESSED AIR																					
PIPE, TUBE, AND FITTINGS (NOTE 4)										X	X										
CHEMICAL WASTE SYSTEMS LAB & HEALTH CARE FACILITIES																					
CHEMICAL WASTE & VENT PIPING IN LAB & SPD (NOTE 5)						X			X							X		X		X	X
ETO PIPING BUTT WELDED JOINTS AND FITTINGS (NOTES 1 & 5)															X						
SILVER RECOVERY (ASTM D2665) (NOTE 5)								X													
REVERSE OSMOSIS WATER EQUIPMENT																					
LOW PRESSURE FEED & RECYCLE PIPING (NOTE 6)							X														
HIGH PRESSURE REJECT & RECYCLING (NOTE 6)														X							
LOW PRESSURE CONTROL & PRESSURE GAUGE (NOTE 1)																	X				
REAGENT WATER AND DIALYSIS WATER																					

SERVICE	FIBERGLASS FILAMENT WOUND	SCHED 40 BLACK STEEL	CAST IRON –HUB & SPIGOT	CAST IRON –NO HUB	DUCTILE IRON AWWA C151	CPVC CHEMICAL WASTE	SCHED 80 PVC	SCHED 40 PVC	POLYPROPYLENE (FUSION JOINT)	COPPER TYPE K	COPPER TYPE L	COPPER DWV ASTM B 306	CHROME PLATED BRASS	STAINLESS STEEL ASTM A269	STAINLESS STEEL ASTM 312	STAINLESS STEEL 316	POLYETHYLENE TUBING	PVDF	GALVANIZED STEEL	HIGH SILICON IRON	BOROSILICATE GLASS PIPE (BSG)
DISTRIBUTION PIPE AND FITTINGS (NOTE 1)									X								X				
FACILITY FUEL SYSTEMS																					
DIESEL FUEL OIL (NOTE 7)	X	X																			
NATURAL GAS SYSTEMS (NOTE 8)		X											X								

NOTES:

(1) See VA Master Specification 22 11 00 for details.
(2) See VA Master Specification 22 13 00 for details.
(3) See VA Master Specification 22 14 00 for details.
(4) See VA Master Specification 22 15 00 for details.
(5) See VA Master Specification 22 66 00 for details.
(6) See VA Master Specification 22 67 19.16 for details.
(7) See VA Master Specification 23 10 00 for details.
(8) See VA Master Specification 23 11 23 for details.

---END OF APPENDIX---

INDEX

A

A/E submission requirements and plumbing design manual coordination
BIM requirements 83
compliance requirements 83
coordination....83
equipment schedules....84
general 83
specific drawing requirements....83
ABAAS ..... *See* Architectural Barriers Act Accessibility Standards
acid injection system 73
additional design criteria and standards
implementing instructions 5
sustainability and historic federal buildings....6
air systems
dental compressed....65
animal care (vivarium) facilities 72
Architectural Barriers Act Accessibility Standards 6

B

backflow preventers 72
backflow-preventers
reduced-pressure....18
bariatric water closet 16
BIM ....*See* Building Information Modeling
biological safety level 3 labs 71
booster pumps....54
BSL-3 ....*See* biological safety level 3 labs
Building Information Modeling Guide 5
building storm drainage systems
calculations 50

C

CAFM .....*See* Computer Aided Management Requirements
CAFM and equipment schedule utilization 81
electronic documentation....81
introduction 81
submission requirements....81
calculations 88, 89
demineralization 88
filtering and heating demand....88
hot water generation 88
nitrous oxide pipe size 89
oral evacuation and dental system 89
pipe size 88
pressure zone....88
storm drainage pipe sizing 88
submittal requirements 13
sump pump system design 88
calculations and review submittals....13
carbon filters....73
codes and standards 2
commissioning 2
compliance requirements 83
Computer Aided Facilities Management Requirements 8
construction document level 1
submission requirements 87
contaminated-water and sanitary water retention.... 52
contract drawings.... 10
basic design parameters.... 10
cross sections 12
equipment schedules 12
general.... 10
plumbing fixture numbers.... 11
stack and riser diagrams.... 12
symbols and abbreviations.... 11
coordination.... 7
criteria unique to the VA 7
proprietary items.... 8
VA provided materials 7

D

deionization.... See demineralization
demineralization
calculations.... 88
dental air compressor system
intake.... 66
dental compressed air system
air volume and pressure requirements 67
central supply system pressure requirements 65
location of outlets 66
piping systems 66, 67, 68, 69
shut-off valve.... 66
solenoid 67
utility junction center 66
dental compressed air systems 65
dental compressed air systems and equipment.... 65
design development level 1
submission requirements 86
design development level 2
submission requirements 87
design for dental unit water lines 69
device calibration 27
domestic hot water systems 21
water heater efficiency 22
water heaters for non-patient care buildings.... 24
water heaters for patient care and research buildings 22
booster heaters 24
dietetic equipment 23
instantaneous and semi-instantaneous water heaters.... 23
tank type water heaters 23
domestic hot water systems
instantaneous tankless water heaters.... 24
domestic hot water systems
sizing of water heaters 24
domestic hot water systems
thermostatic mixing valves.... 25
domestic hot water systems

hot water recirculation loops and return piping 25
domestic hot water systems
shut-off and balancing valves 26
domestic hot water systems
heat traps.....27
domestic water booster system
minimum pressure 38
non-patient care buildings 39
patient care buildings 38
domestic water booster systems 38

E

electric water coolers 17

F

freeze conditions 10

G

general piping design guidelines.....27
definitions 27
requirements for piping systems 27
general requirements
purpose 1
gray water recycling system 44
grease interceptors.....52

H

hemodialysis water distribution system design.....72
general 72
monitoring system 74
system description 73
high volume oral evacuation systems.....64
HVE .....*See* high volume oral evacuation

I

inspections and witness of tests 34
interdiscipline coordination 12
interior fuel gas systems 70

L

laundry.....76
dedicated sump 76
equipment 76
floor drains.....76
floor sinks.....76
Legionella mitigation in VA facilities 29
background 30
emergency water disinfection methods 33
piping design guidelines.....31
piping design guidelines for *Legionella* mitigation.....31
purpose 29
shock chlorination.....34
special use water systems.....34
supplemental water disinfection methods 32
thermal eradication 33
local codes and requirements 7
local utility providers 7
location of drain leaders 50

M

medical air systems 58
medical gas and vacuum 54
general..... 54
medical gas and vacuum systems 54
alarms..... 58
central supply systems 55
connections to existing medical gas systems 59
oxygen, medical compressed air, medical vacuum,
nitrous oxide, and nitrogen systems..... 54
piping systems 57
renovation projects 54
sizing the systems..... 55
system setup 56
water cooled equipment 54
metering..... 2

N

National Fire Protection Association 5
NFPA..... *See* National Fire Protection Association

O

oil/water separators..... 52
oral evacuation system 63
airflow and vacuum requirements 63
high volve oral evacuation..... 63
vacuum relief valves 64

P

pharmacy plumbing requirements..... 74
pipe support design..... 9
plaster traps/interceptors 52
plumbing design criteria..... 9
equipment pads 9
piping..... 9
test prior to design 9
plumbing fixture schedules 18
plumbing fixtures 14
bariatric 16
general..... 14
plumbing for parking structures
storm drainage systems 78
water distribution systems..... 78

R

rain water harvesting system 50
reagent grade water systems..... 77
emergency shower and eye/face wash 78
floor space for central reagent grade equipment 77
floor space for reagent chemicals 78

negative pressure ventilation 78
research and clinical laboratory gas and vacuum systems60
alarms 63
central supply systems....60
piping systems 62
responsibility 1
roof drain leaders insulation....50

S

sand/grit traps 52
sanitary drainage 41
dialysis sanitary drains 42
waste neutralization systems....42
sanitary drainage systems
cast iron piping....43
chemical-resistant piping....43
cleanouts....43
fixture units....41
floor drains....41
grease removal systems....42
pipe design....41
sanitary connections....41
waste and vent systems....44
schedule of area/roof drains 50
schedule of floor drains 44
schedules
equipment 81
schematic design level 1
submission requirements....85
schematic design level 2
submission requirements....86
schematic diagrams
acid waste neutralization system....93
cold water/hot water connection of plumbing fixture 92
hot water circulation with master thermostatic mixing valve 95
hot water/hot water return pipe routing in a typical ward 94
introduction 90
master thermostatic mixing valve....90
temporary booster heater connection 91
schematic level 1
fixture count schedule 85
soil boring information 85
seismic requirements....10
Service Pipe Schedule 96
shop compressed air system....75
silver recovery system 75
automatic film processor 75
equipment 75
pipe stub 75
solar domestic water heating 39
basic solar system design....39
simple system calculation 40
special equipment 16
chemical fume hoods....17
dialysis machines 16
distilled water stills.... 17
film processing areas.... 17
heart and lung machines 16
kitchen equipment 17
loading dock 17
sterilizers 17
trash room.... 17
State Historic Preservation Office 6
storm connections.... 50
storm system drainage.... 50
sustainable design.... 2

T

therapeutic pool
calculations.... 88
therapeutic pool equipment 75
disinfection.... 75
equipment room 76
filter 75
pH balancing.... 76
pipes and equipment.... 75
recirculating pump 76
water heater.... 75
water treatment system.... 75

U

UJC.... *See* Utility Junction Center
underslab and foundation drainage 50
utility junction center 63

V

VA Hospital Building System.... 3
VA standards 3
additional design criteria and standards 5
barrier free design standard.... 4
cultural resource management procedures (H-7545) ... 5
design and construction procedures 3
design and standards alerts.... 5
design guides.... 4
design manuals.... 4
design submission requirements.... 4
equipment guide list.... 4
master construction specifications.... 3
signage design manual 5
standard details and CAD standards 3
VA Standards
seismic design handbook.... 5
VAHBS .... *See* VA Hospital Building System

W

water distribution system
backflow preventers.... 36
hose connection vacuum breakers.... 37
pressur-reducing valves.... 38
reduced pressure backflow preventers.... 37

wall hydrants....36
water distribution systems....35
coordination....36
measuring and indicating devices....35
metering for use....35
trap primers....36
water hammer arrestors....36
water heaters
instantaneous and semi-instantaneous....23
tank type....23
water softening system....76
brine and caustic soda tanks....77
dealkalizer tank....77
dealkalizing equipment....77
miscellaneous....77
salt storage....77
softener....76
when required....76
water supply and distribution
general....21

---END OF INDEX---