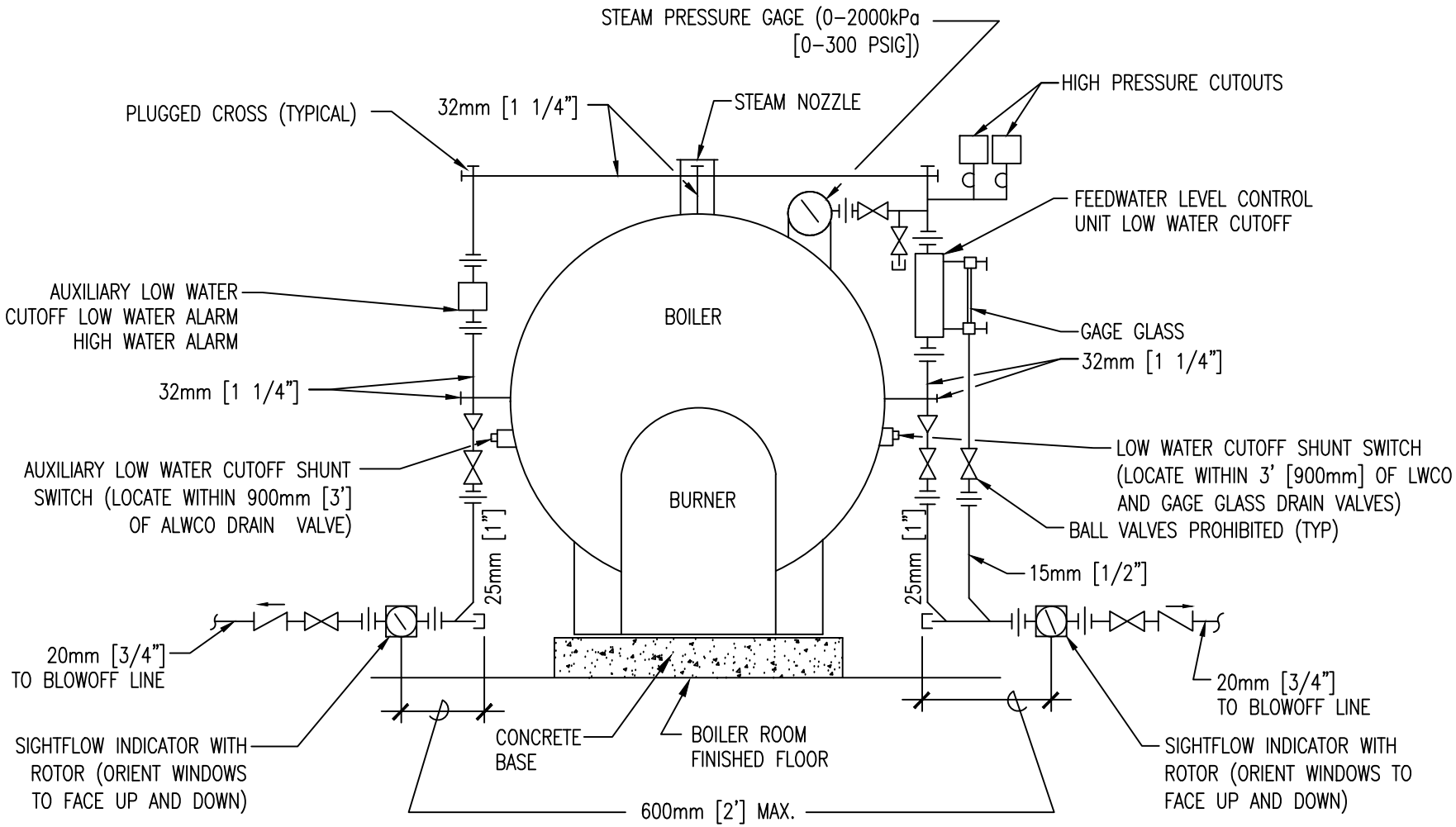

ELEVATION

FIRE TUBE BOILER AUXILIARY WATER LEVEL SAFETY PIPING

#

NTS

Department of Veterans Affairs

DETAIL TITLE: FIRE TUBE BOILER

SCALE :NONE

DATE ISSUED :11/01/2017

CADD DETAIL NO. : SD235239-01.DWG