U.S. Department of Veterans Affairs

Office of Construction & Facilities Management

Office of Facilities Planning
Facilities Standards Service

DESIGN ALERT

DECEMBER 31, 2018

DESIGN ALERT INDEX - CURRENT

Design Alert Number	Issue Date	Subject	Verify or Modify Date
003C2B-DA-149	10-01-2018	Patient Privacy and Women Veterans' Health, Design for	
003C2B-DA-148	06-01-2017	VA Standards Application and User Design Input Requirements	
003C2B-DA-147	09-01-2016	VA Project Design Principles – Foundation of Design	
003C2B-DA-144	06-01-2015	Revisions to Telecommunications Systems Uninterruptable Power Supply Requirements	
003C2B-DA-142	06-01-2014	For Immediate Application on All Current Projects Patient Safety in VHA Bathrooms	11-01-2014
003C2B-DA-138	04-19-2012	Indoor Water Features, Decorative Fountains Recommend Non-Use	
003C2B-DA-137	04-28-2011	Spinal Cord Injury/Disorders Design Guide	08-24-2011
003C2B-DA-132	05-01-2008	Pharmacy Design Guidance, Update on Compliance with USP 797 "Pharmaceutical Compounding – Sterile Preparations"	
003C2B-DA-121	09-15-2004	Mycobacterial Laboratories – BSL3 Labs Architectural and Engineering Controls Update	

CONTACT: Facilities Standards Service at til@va.gov

U.S. Department of Veterans Affairs
Office of Construction & Facilities Management
Office of Facilities Planning
Facilities Standards Service

DESIGN ALERT

SEPTEMBER 15, 2004
003C2B-DA-121

Mycobacterial Laboratories – BSL 3 Labs Architectural and Engineering Controls Update

ISSUE: Engineering controls in Biosafety Level (BSL 3) laboratories.

BACKGROUND: Due to a heightened national concern about bio-safety in Clinical Mycobacterial Laboratories, a design alert, FM-187C-DA49 was issued on June 3, 1997, recommending architectural and engineering controls in BSL 3 laboratories. Since then, requirements have changed. This design alert updates those requirements.

RECOMMENDATIONS: For new construction or major renovation of clinical mycobacterial laboratories, the following architectural and engineering controls are recommended as per latest CDC/NIH guidelines.

1. The architectural and engineering drawings shall identify the area requiring BSL3 compliance. The area shall be identified based on discussions with the medical center personnel.
2. Requirements of the most recent 4th Edition of the CDC/NIH Manual on Biosafety in Microbiological and Biomedical Laboratories shall be followed. For Laboratory Facilities (Secondary Barriers) for Biosafety Level 3 Laboratories are:
    a. *The laboratory is separated from areas that are open to unrestricted traffic flow within the building, and access to the laboratory is restricted. Passage through a series of two self-closing doors is the basic requirement for entry into the laboratory from access doors. Doors are lockable. A clothes change room may be included in the passageway.*
    b. *Each laboratory room contains a sink for hand washing. The sink is hands-free or automatically operated and is located near the room exit door.*
    c. *The interior surfaces of walls, floors and ceilings of areas where BSL-3 agents are handled are constructed for easy cleaning and decontamination. Seams! If present, must be sealed. Walls, ceilings, and floors should be smooth, impermeable to liquids and resistant to the chemicals and disinfectants normally used in the laboratory. Floors should be monolithic and slip-resistant. Consideration should be given to the use of coved floor coverings. Penetrations in*

floors, walls, and ceiling surfaces are sealed. Openings such as around ducts and the spaces between doors and frames are capable of being sealed to facilitate decontamination.

d. *Bench tops are impervious to water and are resistant to moderate heat and the organic solvents, acids, alkalis, arid those chemicals used to decontaminate the work surfaces and equipment.*

e. *Laboratory furniture is capable of supporting anticipated loading and uses. Spaces between benches, cabinets, and equipment are accessible for cleaning. Chairs and other furniture used in laboratory work should be covered with a non-fabric material that can be easily decontaminated.*

f. *All windows in the laboratory are closed and sealed.*

g. *A method for decontamination all laboratory wastes is available in the facility and utilized, preferably within the laboratory (i.e., autoclave chemical disinfections, incineration, or other approved decontamination method). Consideration should be given to means of decontaminating equipment. If waste is transported out of the laboratory, it should be properly sealed and not transported in public corridors.*

h. *Biological safety cabinets are required and are located away from doors, from room supply louvers, and from heavily traveled laboratory areas.*

i. *A ducted exhaust air ventilation system is provided. This system creates directional airflow, which draws air into the laboratory from "clean" areas and toward "contaminated" areas. The exhaust air is not re-circulated to any other area of the building. Filtration and other treatments of the exhaust air are not required, but may be considered based on site requirements, and specific agent manipulations and use conditions. The outside exhaust must be dispersed away from occupied areas and air intakes, or the exhaust must be HEPA-filtered. Laboratory personnel must verify that the direction of the air flow (into the laboratory) is proper. It is recommended that a visual monitoring device that indicates and confirms directional inward airflow be provided at the laboratory entry. Consideration should be given to installing an HVAC control system to prevent sustained positive pressurization of the laboratory. Audible alarms should be considered to notify personnel of HVAC system failure.*

j. *HEPA-filtered exhaust air from Class II biological safety cabinet can be re-circulated into the laboratory, if the cabinet is tested and certified at least annually. When exhaust air from Class II safety cabinet is to be discharged to the outside through the building exhaust air system, the cabinet must be connected in a manner that avoids any interference with the air balance of the cabinets or the building exhaust system (i.e. an air gap between the cabinet exhaust and the exhaust duct). When Class III biological safety cabinets are used, they should be directly connected to the exhaust system. If the Class III cabinets are connected to*

the supply system, it is done in a manner that prevents positive pressurization of the cabinets.

k. *Continuous flow centrifuges or other equipment that may produce aerosols are contained in devices that exhaust air through HEPA filters before discharge into the laboratory. These HEPA systems are tested at least annually. Alternatively, the exhaust from such equipment may be vented to the outside if it is dispersed away from occupied areas and air intakes.*

l. *Vacuum lines are protected with liquid disinfectant traps and HEPA filters, or their equivalent. Filters must be replaced as needed. An alternative is to use portable vacuum pumps (also properly protected with traps and filters).*

m. *An eyewash station is readily available inside the laboratory.*

n. *Illumination is adequate for all activities, avoiding reflections and glare that could impede vision.*

o. *The Biosafety Level 3 facility design and operational procedures must be documented. The facility must be tested for verification that the design and operational parameters have been met prior to operation. Facilities should be re-verified, at least annually, against these procedures as modified by operational experience.*

p. *Additional environmental protection (e.g. personnel showers, HEPA filtration of exhaust air, containment of other piped services and the provision of effluent decontamination) should be considered, if recommended by the agent summary statement, as determined by risk assessment, the site conditions, or other applicable federal, state, or local regulations.*

3. Minimum air changes per hour for laboratory shall be 12.
4. Biological Safety Cabinet hood exhaust shall be on emergency power.
5. Although CDC/NIH in paragraph 2.j above allows re-circulation of air from Class II cabinets or use of building exhaust system, VA criteria requires an independent dedicated exhaust system for each Class II and Class III hood.
6. Hood exhaust ducts shall not be housed in the same shaft carrying environmental supply, return or other non-hazardous exhaust ducts from the building.
7. Run Biological safety cabinet exhaust fans continuously.
8. Access CFM Technical Information Library (TIL) at https://www.cfm.va.gov/til/ for design manuals and master specifications.

Previous Design Alert FM-187C-DA49 dated June 3, 1997 is rescinded.

CONTACT: Facilities Standards Service at til@va.gov

U.S. Department of Veterans Affairs

Office of Construction & Facilities Management

Office of Facilities Planning
Facilities Standards Service

DESIGN ALERT

MAY 1, 2008
003C2B-DA-132

Pharmacy Design Guidance: Update on Compliance with USP Chapter 797 "Pharmaceutical Compounding – Sterile Preparations"

GENERAL: This Pharmacy Design Alert is being issued based on current provisions of USP Chapter 797 (USP<797>) on "Pharmaceutical Compounding – Sterile Preparations "issued in December 2007, and supersedes the previously issued Design Alert FM-181A-DA-124 dated February 23, 2006. The purpose of the Pharmacy Design Alert is to provide a guidance to VA and VHA Facilities and Services to facilitate compliance with USP <797> provisions regarding architectural, environmental and physical standards required for compounding sterile drug preparations. It is not intended to replace or supersede any existing VA/VHA policies in place.

ISSUES: USP issued its revised version of Chapter 797 (<797>) with a number of changes clarifying issues related to physical infrastructure such as mechanical, electrical and architectural items for both sterile compounding and hazardous sterile compounding of drug products. The Joint Commission (JC) has announced its intent to begin surveying healthcare facilities for compliance with the provision of USP Chapter 797 (USP<797>) entitled "Pharmaceutical Compounding - Sterile Preparations". The JC considers USP <797> a valuable set of guidelines based on contemporary consensus-based safe practices that describe a best practice for establishing safe processes in compounding sterile medications. USP <797> is considered to be an official minimum standard for compounding sterile medications and it is therefore enforceable by the Food and Drug Administration (FDA), state boards of pharmacy and other regulatory agencies. As such, USP <797> is an enforceable requirement that mandates procedures and processes for sterile drug compounding (mixing) of pharmaceuticals in a clean room environment. USP <797> establishes International Organization for Standards (ISO) requirements for acceptable clean room airborne particulate concentrations and assessment procedures.

NIOSH has jurisdiction over the standards for drugs requiring separate preparation areas for personnel safety.

BACKGROUND: USP is an independent organization that establishes standards for drugs and drug preparations. JC has adopted USP <797> for its inspection of sterile drug compounding

areas in healthcare facilities. This has a significant impact on the design of pharmacy clean rooms and perhaps other spaces as well. VA's Pharmacy Benefits Management (PBM) Services at VACO formed a USP 797 Work Group to provide consultations and technical guidance for VHA facilities to plan implementation of the USP <797> provisions and to meet JC requirements. Most VA pharmacies that prepare sterile compounding of pharmaceuticals also prepare hazardous drugs. Like sterile non-hazardous pharmaceuticals, sterile hazardous pharmaceuticals should also be prepared in a sterile environment. In this Design Alert, pertinent requirements for both hazardous and non-hazardous clean rooms are provided as related to compounding of sterile drug products.

DEFINITIONS: Refer to USP 797 Pharmacy Design Briefing Document at http://vaww.ceosh.med.va.gov, for helpful information listed under Pharmacy Safety for ISO Class 5, Class 7 and Class 8 Clean rooms.

1. Clean Room (also known as the Buffer Room) is a space in which the concentration of the airborne particles is controlled to meet a specified cleanliness class. For hazardous and non-hazardous clean rooms, mentioned below in Paragraph E with the recommended Option 2, the required level of cleanliness is ISO (International Organization for Standards) Class 7. Class 7 clean room limits the maximum concentration of particles to 10,000 particles per cubic feet (352,000 per cubic meter of 0.5 microns or larger).

2. Anteroom is a space leading into and out of the hazardous or non-hazardous clean rooms. This is a transitional space in which activities, such as, hand hygiene, garbing procedures, and staging of components and other activities are performed. While the ISO classification of the anteroom serving the hazardous clean room shall be same as the clean room, that is, ISO 7, the ISO classification of the anteroom serving the non-hazardous clean room shall be ISO 8 (or ISO 7, if the architectural design in place incorporates a common anteroom for both hazardous and non-hazardous clean rooms).

   Anterooms are transition spaces, which ensure direction of airflow and help maintain the required pressure relationships. Non-hazardous clean rooms should be maintained at 0.02-inch to 0.03-inch positive pressure with respect to their anterooms, which, in turn, should be maintained at 0.02-inch positive air pressure with respect to the adjoining circulation spaces. Hazardous clean rooms should be maintained at 0.02-inch negative pressure with respect to their anterooms, which, in turn, should be maintained at 0.02-inch positive air pressure with respect to the adjoining circulation spaces.

   Use of the anterooms prevents large swings in temperature. Each anteroom shall be equipped an automatic hand washing basin. Anteroom serving hazardous clean room should also be equipped with an eyewash station.

   For the hazardous clean rooms, anterooms can be used for storing the hazardous drugs so that the use of a dedicated storage room can be avoided.

3. Primary Engineering Control (PEC): This is an ISO Class 5 space or a device in which (Compounded Sterile Preparations (CSPs)) take place. While the choice of the ISO 5 device is left to the discretion of the pharmacists using the facilities, the following two devices are recommended:

   3.1. Biological Safety Cabinets (BSC): Use of these cabinets is recommended for the hazardous clean rooms. These are vented cabinets meant of the protection of personnel, products, and environment. Air drawn by the BSC should be exhausted outdoors after passing through HEPA filters, integral or duct-mounted external, by a dedicated exhaust fan.

   3.2. Laminar Airflow Workstation (LAFW): Use of these devices is recommended for the non-hazardous clean rooms. These devises can be 100% re-circulatory type.

   3.3. CAI (Compounding Aseptic Isolator): This is a form of isolator designed for maintaining aseptic environment within itself. Air exchange into and out of the isolator shall be done through HEPA filters.

   3.4. CACI (Compounding Aseptic Containment Isolator): This is form of CAI, designed to provide worker protection from exposure to unacceptable levels to drug exposure. 100% exhaust of the air is required while dealing with hazardous substances. Air exchange into and out of the isolator shall be done through HEPA filters.

4. Air lock: A small room or space ("pass-through" chamber or window) between two rooms of different air pressure, with interlocked doors (one tightly closed at all times) to prevent loss of pressure in the higher-pressure room.

DISCUSSION: USP 797 describes three risk levels defined by the complexity of the pharmaceutical compounding process, namely Low, Medium and High Risk Level compounding, all of which require that work involving the sterile pharmaceutical compounding shall take place under ISO Class 5 conditions within a buffer area that should be ISO Class 7 with appropriate air conditioning and humidity controls in place in the buffer area environment. These standards are to be exemplified in every category. Class 5 environments require hundreds of air changes of HEPA filtered air, stringent gowning and masking requirements, Anteroom etc. The Class 5 environment is achievable in four ways:

Option 1: Provide a Class 5 Clean Room.

Option 2: Provide a Class 5 environment in a Primary Engineering Control (PEC) defined above. Locate this device in ISO Class 7 buffer room and protect the integrity of the clean room requirement by providing an ISO Class 7 anteroom for the hazardous clean room, and an ISO Class 8 anteroom for the non-hazardous clean room.

Option 3: Perform all sterile pharmaceutical compounding within a Compounding Aseptic Containment Isolator (CACI) for Low Risk Levels.

Option 4: Consider use of a portable clean room.

RECOMMENDATIONS:

1. Determine the risk level of compounding typically performed within the pharmacy (Low, Medium or High) and the volume of work to be accomplished at peak periods. The medical centers can perform this essential task with guidance from the VHA USP 797 Workgroup and Chief of Pharmacy. Consider Options 1-4 for their impact on ventilation and architectural issues:

    a. Option 1, ISO Class 5 clean rooms will be a very difficult option to follow, primarily due to the severe operational difficulties associated with gowning, masking, scrubbing, very high rate of air changes and the high cost of the HVAC and architectural features. More importantly, if the air handling system fails, it will not be possible to continue to use the space for sterile compounding until the system is back up again.

    b. Option 2, Class 7 clean rooms would be easier to construct and maintain than option 1 from an HVAC standpoint requiring on the order of minimum 30 air changes per hour which may include 15 air changes per hour from an ISO Class 5 air-re-circulating device, and not hundreds. To simplify the HVAC system design, VA has opted to supply all 30 air changes per hour from the environmental air-handling unit and not use a secondary -, dedicated air-circulating unit as stipulated in USP <797> pages 27-28. See the attached room data sheets for HVAC design parameters. The room however, must be able to maintain the defined particle count during peak operations. Architectural features however, will still apply such as monolithic, cleanable surfaces, with anteroom and gowning, masking scrubbing etc. Also, if the air handling system fails it would still be possible to continue use the space to maintain ISO Class 5 environment within the operating PEC device.

    c. Option 3, the least impacted option could be the use of CACIs, where a surrounding clean room environment and air lock and ante room are not required. However, it may not be possible to perform all procedures in these enclosures.

    d. Option 4: A portable clean room would cost in the range of $40,000 - $80,000, but would be less than a total physical renovation or new addition of a space.

2. For the hazardous clean room, the ISO Class 5 PEC device should be BSC (Biological Safety Cabinets) NSF Class II (Laminar Flow), Type B2, with 100 percent exhaust to outside.

3. A DX (Direct Expansion) system for cooling should not be used. Use of chilled water is more effective in providing accurate environmental control. While it is preferable to provide emergency power for the heating, ventilating and air-conditioning system including all exhaust fans serving the clean rooms and support area, at least the dedicated exhaust fan serving the BSC cabinet should be on emergency power.

4. Air locks and Anterooms: The use of air locks and ante rooms should be carefully planned. The medical center staff may consider provision of an air lock in addition to an ante room where they expect a high volume of compounding in the clean room, otherwise use of an ante room should be sufficient to maintain pressure in the clean room.

5. Pass-through Chamber: Depending on the size and space availability in the clean room and volume of compounding done, the medical center may consider provision of a pass-through window to facilitate passing out of compounded drugs without having pharmacy personnel frequently go in and out of the clean room through an ante room. The pass-through window should be big enough to facilitate the passage of compounded sterile products or materials and have a tight seal between the clean room and the pharmacy area and should have two access doors. To prevent direct exposure from the clean room to the pharmacy area, both doors should not open at the same time. Provide door interlocks limiting doors to being open.

6. HEPA with pre-filters should be accessible for service from outside the Clean Room.

7. See the attached AHU and Room Data Sheets for details of the exhaust air system.

8. Location of outside air intake is critical. The intake should not be located near plumbing vents, animal room exhausts, generator exhausts, loading docks, automobile entrances, driveways, passenger drop offs, cooling towers, incinerator and boiler stacks and any other item that may degrade the quality of air. There should be separation of at least 30 feet between the air intakes and exhaust air outlets. Perform a dispersion analysis based on the actual configuration of the pharmacy area, surrounding facilities, and prevailing wind directions etc. to establish, if a separation of more than 30 feet is required.

9. Monitor room temperature, relative humidity and pressure via monitoring devices in the Clean Rooms on a continuing basis.

10. Provide monolithic and cleanable walls, floors and ceilings.

11. Do not provide floor drains and sinks in the Clean Room.

12. Operate the dedicated biological safety cabinets exhaust system around the clock.

13. The external lens of any lighting fixture must be smooth and cleanable.

14. The doorway into the buffer zone or clean room must be of sufficient size to move LAFWs in and out of the buffer zone when required.

15. Seal all wall openings, slots, piping and electrical conduits and other penetrations to minimize air leakage from the clean room.

16. Provide hand hygiene facilities in the ante room and touchless controls to the extent possible to avoid recontamination of hands. Consider items such as automatic controls for entrance door between the Anteroom and the clean room. The controls should be on emergency power. Provide electronic devices or photo sensors with time delays for light switches and towel dispensers with electronic sensors. The electronic sensors should be in front of the faucets facing the user to allow water to be run long enough to come to temperature before immersing hands.

17. Provide clothing hooks in the ante room on the way to the Clean Room.

18. Review material shown under 'REFERENCES' below.

19. Appendix 1 and 2: The attached AHU Data Sheet and Room Data Sheets, taken from the 2008 HVAC Design Manual for Hospital Projects are somewhat modified to avoid repetition of the information appearing in the text of the design alert, and references to the chapters in the Design Manual are not readily available here. A dedicated AHU for the pharmacy area can serve other areas, such as, controlled substance vault, prescription receiving and filling assembly etc. While the focus of this Design Alert is on the hazardous and non-hazardous drug preparation areas, requirement for other areas associated with pharmacies is also attached for information purposes only.

REFERENCES:

1. http://www.ashp.org/sterileCpd

2. http://vaww.ceosh.med.va.gov

3. United States Pharmacopeia General Chapter <797> 'Pharmaceutical Compounding – Sterile preparations"; The United States Pharmacopeia, Second Supplement to USP 31 – NF 26, Rockville, MD; United States Pharmacopeia Convention: 2008: 1-61.

4. PBM Website for VHA USP 797 Workgroup

5. Technical Information Library (TIL): Access HVAC Design Manual for Hospital Projects @ https://www.cfm.va.gov/til/ for ventilation requirements for Bio-safety Class II Cabinets. Refer to Paragraph 3.7 'Biological Safety Cabinet (BSC) – VA Type H12 in the Manual.

6. ASHRAE Journal September 2004, Article" Understanding Pharmaceutical Clean Room Design".

7. Under Secretary for Health Information Letter 'Airborne Particle Assessment of Pharmaceutical Clean rooms'.

8. Under Secretary for Health Information Letter 'Microbiological Assessment of Pharmaceutical Clean rooms'.

9. Frequently Asked Questions (FAQS) Regarding USP <797>, VHA USP 797 Workgroup.

CONTACT: Facilities Standards Service at til@va.gov

APPENDIX 1:

PHARMACY SERVICE - AIR HANDLING UNIT

AHU Data Sheet	
Air Handling Unit Type	● Variable Air Volume (VAV) ● **Note 1**
Inside Design Conditions	Room Data Sheets
Minimum Outside Air	Chapter 2 of HVAC Design Manual for Hospital Projects
Minimum Supply Air Changes per Hour	Room Data Sheets
Return Air	Room Data Sheets
Economizer Cycle	ASHRAE 90.1 - 2007
Air Balance	Room Data Sheets
Filtration	● Pre-Filters, MERV 8 rating ● After Filters, MERV 14 rating ● Final-Filters, MERV 17 rating ● **Note 2**
Cooling Source	Use chilled Water from the central chiller plant Note 3
Heating Source	● Use high pressure steam from the central boiler plant as the primary source for generating heating hot water and producing "clean steam" for winter humidification. ● Use medium pressure steam from the central boiler plant for unit mounted pre-heat coils.
General Exhaust System(s)	Required
Special Exhaust System(s)	Room Data Sheets
Heat Recovery System	ASHRAE 90.1 - 2007
Additional Energy Conservation Measures	To meet the mandated goal of 30% additional energy conservation above ASHRAE 90.1 – 2004, evaluate the use of desiccant dehumidification system to reduce the dew point temperature of the incoming outside air
Emergency Power	Required

Note 1: The HVAC system design criteria are based on the latest (December, 2007) publication of the USP (The United States Pharmacopeial Convention) Revised Bulletin **<797> Pharmaceutical Sterile Preparations.** A dedicated air-handling unit is not required to serve the hazardous and/or non-hazardous clean rooms so long as any air-handling unit serving these spaces can meet all requirements outlined in the AHU Data Sheet and the Room Data Sheets.
Note 2: Locate the final filters (third bed) on the downstream side of the individual air terminal units serving each hazardous and non-hazardous clean room. Oversize the final filters to minimize the pressure drop. For remaining rooms, terminal HEPA filters are not required.
Note 3: Dedicated chiller is required if chilled water is not available year-round.

PHARMACY SERVICE – ROOM DATA SHEETS

Non-Hazardous Clean Room – Room Data Sheet

Description: The following introductory information is provided for the non-hazardous clean rooms. The room comprises three segments:

1. PEC (Primary Engineering Control) is a device or a space that provides ISO Class 5 environment for compounding of drugs. **Selection of the PEC shall be done by the VA Pharmacy Department.** Generally, a laminar airflow work bench (LAFW) is used as the PEC device. The room air need not be exhausted outdoors.

Note that USP <797> General Chapter allows the use of a CAI (Compounding Aseptic Isolator) or CACI (Compounding Aseptic Containment Isolator) for Low-Risk Level CSPs (Compounded Sterile Preparations) even without the use of Class 7 Clean Room, provided "non-hazardous and radiopharmaceutical CSPs pursuant to a physician's order for a specific patient may be prepared, and administration of such CSPs shall commence within 12 hours of preparation or as recommended by in the manufacturer's package insert whichever is less. See USP <797> for the Low-Risk Conditions.

2. Buffer area is the space in which the PEC is physically located. This is the clean room where activities such as preparation and staging of components used for drug preparation take place. Buffer area is maintained at ISO Class 7 by supplying HEPA filtered air in a unidirectional manner from the suspended ceiling.

3. Anteroom is an ISO Class 8 or better area, which serves as a transient place to maintain the integrity of buffer area. This space also handles personnel hygiene and garbing of the personnel. Physical separation between the anteroom and buffer area is a wall with doors. Only one set of doors will be able to open at any given time to avoid disruption of the air pressure gradient.

PEC and Buffer Room (Non Hazardous Clean Room) – Room Data Sheet

Inside Design Conditions	● Cooling Mode 68 F [20 C] Dry-Bulb Temperature (maximum) 55% Relative Humidity ● Heating Mode 68 F [20 C] Dry-Bulb Temperature (minimum) 40% Relative Humidity **Note 3**
Minimum Supply Air Changes per Hour	● 30 - CV Required ● **Note 1**

Return Air	Permitted
Exhaust Air	**Not required with 100% re-circulatory ISO Class 5. Specific configurations of the BSC cabinets may require exhaust from the room air to outdoors. Co-ordinate exhaust air volume and system configuration per manufacturer's recommendations.**
Individual Room Temperature Control	Required
Room Air Balance	Positive (+) with respect to the Anteroom **Note: 2**
Room Noise Level	NC 40

Note 1: Air changes listed above must be able to limit the concentration of the airborne particles. Provide more air changer per hour, if required, to maintain ISO Class 7 particulate count.
Note 2: Provide outside air as required to maintain the specified pressure differential.
Note 3: Room level humidity control is not required.

Anteroom (Non Hazardous Clean Room) – Room Data Sheet

Inside Design Conditions	● Cooling Mode 68 F [20 C] Dry-Bulb Temperature (maximum) 55% Relative Humidity ● Heating Mode 68 F [20 C] Dry-Bulb Temperature (minimum) 40% Relative Humidity **Note 2**
Minimum Supply Air Changes per Hour	● 20 - CV Required ● **Note 1**
Return Air	Permitted
Exhaust Air	**Not Required**
Individual Room Temperature Control	Required
Room Air Balance	● **Positive (+) with respect to circulation space** ● Negative (-) with respect to Buffer room
Room Noise Level	NC 40

Note 1: Air changes listed above must be able to limit the concentration of the airborne particles. Provide more air changer per hour, if required, to maintain ISO Class 8 particulate count.
Note 2: Room level humidity control is not required.

Hazardous Clean Room – Room Data Sheet

Description: The following introductory information is provided for the hazardous clean rooms. The room comprises of three segments:

1. PEC (Primary Engineering Control) is a device or a space that provides ISO Class 5 environment for compounding of drugs. **Selection of the PEC shall be done by the VA Pharmacy Department.** Generally, a Biological Safety Cabinet (BSC) Class II B2 is used as the PEC device through which the air is exhausted outdoors after passing over the duct-mounted HEPA filter. The HEPA is an integral to the BSC unit, and additional in duct HEPA is not needed.
2. Buffer area is the space in which the PEC is physically located. This is the clean room where activities such as preparation and staging of components used for drug preparation take place. Buffer area is maintained at ISO Class 7 by supplying HEPA filtered air and establishing unidirectional flow.
3. This room can also be used to store hazardous drugs provided adequate storage space is available. Otherwise a separate room is required to store hazardous drugs. This room should be ventilated @ minimum 12 air changes per hour with negative pressure. Exhaust from this room should be connected to the special exhaust system serving the buffer room and ante room.
4. Anteroom is an ISO Class 7 or better area, which serves as a transient place to maintain the integrity of buffer area. This space also handles personnel hygiene and garbing of the personnel. Physical separation between the anteroom and buffer area is a wall with doors. Only one set of doors will be able to open at any given time to avoid disruption of the air pressure gradient.
5. See USP <797> for additional requirement for lighting and ceiling surfaces, caulking, etc.

PEC and Buffer Room (Hazardous Clean Room) – Room Data Sheet

Inside Design Conditions	● Cooling Mode 68 F [20 C] Dry-Bulb Temperature (maximum) 55% Relative Humidity ● Heating Mode 68 F [20 C] Dry-Bulb Temperature (minimum) 40% Relative Humidity **Note 2**
Minimum Supply Air Changes per Hour	● 30 - CV Required
Return Air	Not Permitted
Exhaust Air	**100%,** Note: 1
Individual Room Temperature Control	Required
Room Air Pressure	**● Negative (-) with respect to the Anteroom**
Room Noise Level	NC 40

Note 1: All air supplied to the buffer room shall be exhausted outdoors without in duct HEPA filters in a manner to avoid facility entrainment and building wake effect. BSC or equivalent ISO Class 5 device shall be served by a special exhaust system without additional in duct HEPA filters in accordance with the manufacturer's recommendations. Buffer area and Anteroom below shall be exhausted outdoors through another special exhaust system but without HEPA filters
Note 2: Room level humidity control is not required

Anteroom (Hazardous Clean Room) - Room Data Sheet

Inside Design Conditions	● Cooling Mode 68 F [20 C] Dry-Bulb Temperature (maximum) 55% Relative Humidity ● Heating Mode 68 F [20 C] Dry-Bulb Temperature (minimum) 40% Relative Humidity **Note 1**
Minimum Supply Air Changes per Hour	● 30 - CV Required
Return Air	Not Permitted
Exhaust Air	**100%** See Buffer Room Above
Individual Room Temperature Control	Required
Room Air Balance	**Positive (+) with respect to Hazardous Clean Room** **Positive (+) with respect to Circulation Space whose room pressure is assumed as neutral (0)**
Room Noise Level	NC 40

Note 1: **Room level humidity control is not required**

Controlled Substance Vault and Secured Dispensing Receiving Area – Room Data Sheet

Inside Design Conditions	● Cooling Mode 70 F [21 C] Dry-Bulb Temperature (maximum) 50% Relative Humidity ● Heating Mode 75 F [24 C] Dry-Bulb Temperature (minimum) 35% Relative Humidity ● 5 F [2.8 C] Dead-Band **See Note 1** • Room Humidity shall be 40% if this room is served by the same AHU serving the clean rooms above.
Minimum Supply Air Changes per Hour	6 - VAV Permitted
Return Air	Permitted
Exhaust Air	Not Required
Individual Room Temperature Control	Required
Room Air Balance	Neutral (0)
Room Noise Level	NC 40

Note 1 Room level humidity control is not required

Dispensing, Pre-Packing and EXTEMP – Room Data Sheet

Inside Design Conditions	● Cooling Mode 70 F [21 C] Dry-Bulb Temperature (maximum) 50% Relative Humidity ● Heating Mode 75 F [24 C] Dry-Bulb Temperature (minimum) 40% Relative Humidity ● 5 F [2.8 C] Dead-Band **Note 1** Room Humidity shall be 40% if this room is served by the same AHU serving the clean rooms above.
Minimum Supply Air Changes per Hour	6 – VAV Permitted
Return Air	Permitted
Exhaust Air	Not Required
Individual Room Temperature Control	Required
Room Air Balance	Neutral (0)
Room Noise Level	NC 40

Note 1 Room level humidity control is not required

Drug Information Service – Room Data Sheet

Inside Design Conditions	● Cooling Mode 70 F [21 C] Dry-Bulb Temperature (maximum) 50% Relative Humidity ● Heating Mode 75 F [24 C] Dry-Bulb Temperature (minimum) 35% Relative Humidity ● 5 F [2.8 C] Dead-Band **Note 1** Room Humidity shall be 40% if this room is served by the same AHU serving the clean rooms above.
Minimum Supply Air Changes per Hour	4 - VAV Permitted
Return Air	Permitted
Exhaust Air	Not Required
Individual Room Temperature Control	Required
Room Air Balance	Neutral (0)
Room Noise Level	NC 40

Note 1 Room level humidity control is not required

EXTEMP Repacking and Compounding – Room Data Sheet

Inside Design Conditions	● Cooling Mode 70 F [21 C] Dry-Bulb Temperature (maximum) 50% Relative Humidity ● Heating Mode 75 F [24 C] Dry-Bulb Temperature (minimum) 35% Relative Humidity ● 5 F [2.8 C] Dead-Band • .Room level humidity control is not required • .Room Humidity shall be 40% if this room is served by the same AHU serving the clean rooms above.
Minimum Supply Air Changes per Hour	6 - VAV Permitted
Return Air	Permitted
Exhaust Air	Not Required
Individual Room Temperature Control	Required
Room Air Balance	Neutral (0)
Room Noise Level	NC 40

Medicine Assignment and Stat Counter – Room Data Sheet

Inside Design Conditions	● Cooling Mode 70 F [21 C] Dry-Bulb Temperature (maximum) 50% Relative Humidity ● Heating Mode 75 F [24 C] Dry-Bulb Temperature (minimum) 35% Relative Humidity ● 5 F [2.8 C] Dead-Band **Note 1** • Room Humidity shall be 40% if this room is served by the same AHU serving the clean rooms above.
Minimum Supply Air Changes per Hour	6 - VAV Permitted
Return Air	Permitted
Exhaust Air	Not Required
Individual Room Temperature Control	Required
Room Air Balance	Neutral (0)
Room Noise Level	NC 40

Note 1 Room level humidity control is not required

Prescription Receiving, Filling/Assembly – Room Data Sheet

Inside Design Conditions	● Cooling Mode 70 F [21 C] Dry-Bulb Temperature (maximum) 50% Relative Humidity ● Heating Mode 75 F [24 C] Dry-Bulb Temperature (minimum) 35% Relative Humidity ● 5 F [2.8 C] Dead-Band **Note 1** • . Room Humidity shall be 40% if this room is served by the same AHU serving the clean rooms above.
Minimum Supply Air Changes per Hour	6 – VAV Permitted
Return Air	Permitted
Exhaust Air	Not Required
Individual Room Temperature Control	Required
Room Air Balance	Neutral (0)
Room Noise Level	NC 40

Note 1 Room level humidity control is not required

Unit Dose and Ward Stock – Room Data Sheet

Inside Design Conditions	● Cooling Mode 70 F [21 C] Dry-Bulb Temperature (maximum) 50% Relative Humidity ● Heating Mode 75 F [24 C] Dry-Bulb Temperature (minimum) 35% Relative Humidity ● 5 F [2.8 C] Dead-Band **Notes 1 and 2**
Minimum Supply Air Changes per Hour	6 - VAV Permitted
Return Air	Permitted
Exhaust Air	Not Required
Individual Room Temperature Control	Required
Room Air Balance	Neutral (0)
Room Noise Level	NC 40

Note 1: Room level humidity control is not required:
Note 2: Room humidity shall be 40% if this room is served by the same AHU serving the clean room above.

APPENDIX 2:

MAR-18-2008 14:15 P.01/01

HVAC DESIGN MANUAL
APPENDIX 6-A / PHARMACY
FIGURE 6A-1
FEB 2008

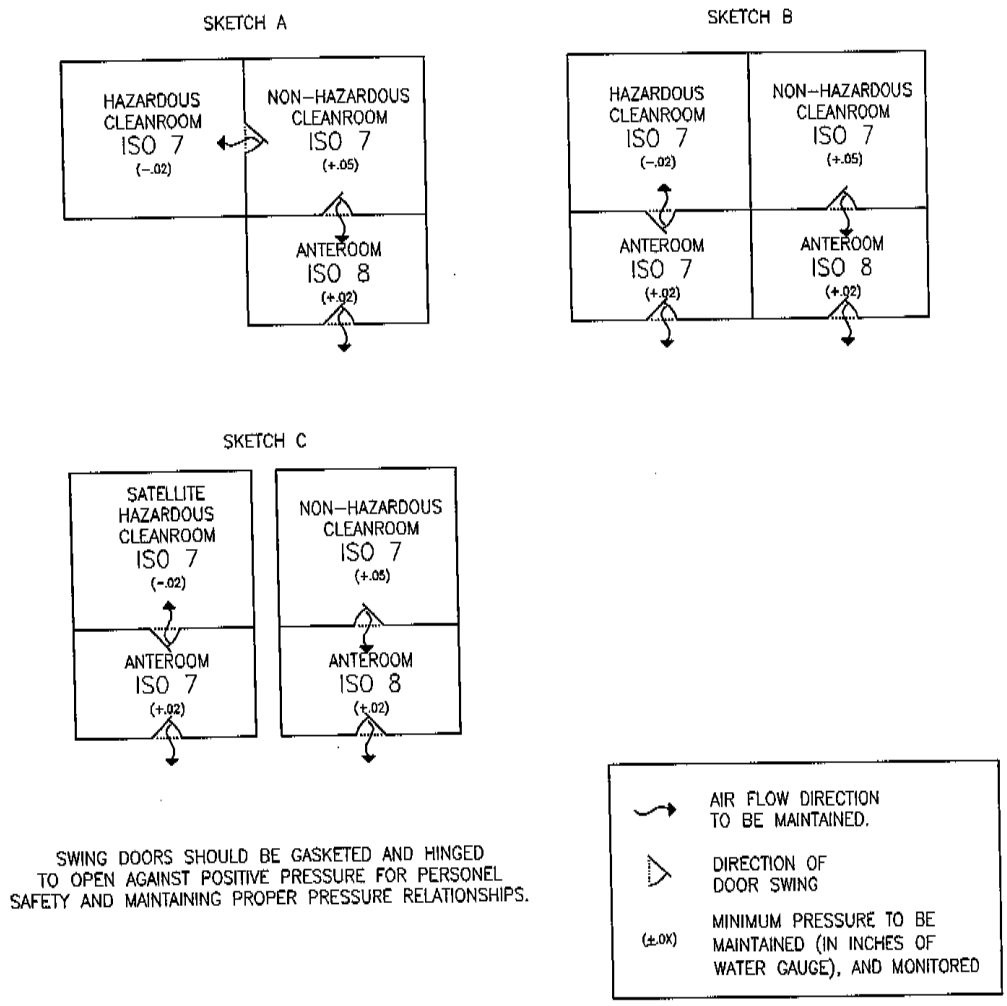

PHARMACY COMPOUNDING AREAS

Not to Scale

6-A66

TOTAL P.01

VA | U.S. Department of Veterans Affairs
Office of Construction & Facilities Management
Office of Facilities Planning
Facilities Standards Service

DESIGN ALERT

AUGUST 24, 2011
003C2B-DA-137

Spinal Cord Injury/Disorders Design Guide

ISSUE: To resolve current challenges interpreting the graphic diagrams contained in the SCI Design Guide to properly facilitate the design of Revised Acute Care SCI Patient (Litter) Bathroom:

1. Revise Acute Care SCI Patient self-care toilet lavatory.
2. Revise Acute Care SCI Patient (Litter) Bathroom (TLTS1) Reflected Ceiling Plan
3. Amend and revise paper towel and soap dispenser to be wall mounted
4. Revise configuration of toilet backrest and grab bar.
5. Delete grab bar at shower seat Acute and Long Term Care Bathrooms.
6. Extend patient lift rail to be adjacent to shower wall.
7. Include PVA Sketch 003A Backrest Detail.

Current SCI Inpatient facilities under design and construction have encountered numerous conflicts in facilitating SCI Patients' ease in access to cleaning and drying their hands after toileting. The current SCI toilet-vanity does not clearly indicate the patient's ergonomic mobility to the self-care vanity including wheelchair nesting about the water closet. The re-design of the patient self-care toilet/vanity identifies the necessity of a "bump-out" to "nest" the commode wheelchair. The patient hoist track configuration creates challenges in transporting and transferring patients to either the showering/transport gurney and hygiene/commode wheelchair. Curtain screening methodology difficult to interpret and the floor drain slope configuration is excessive.

DISCUSSION: Both the Acute Care SCI Patient (Litter) Bathroom as well as the Long Term Care SCI Patient (Litter) Bathroom were reconfigured to address the patient needs regarding both the SCI patient ergonomic and anthropometric challenges required for proper self care while toileting. Both the acute care and long term care environments have salient features

which are common, though the acute care environment has features not provided in the long term care patient bathroom. The designers must be aware that typically SCI patients have a difficult time modulating their body temperatures, particularly when bathing. When patients are toileting, increased air changes are necessary to adequately evacuate odors. Additionally, floor slopes must be positive to drains but not overwhelming as to create excessive slopes which would affect wheelchair maneuvering by the patient. Furthermore, lighting, HVAC supply and return as well as ceiling mounted patient lifts and privacy curtains require coordination to avoid conflicts and interferences.

REQUIREMENTS: Refer to attached Sketches SK-01 thru SK-08 dated August 24, 2011.

CONTACT: Facilities Standards Service at til@va.gov

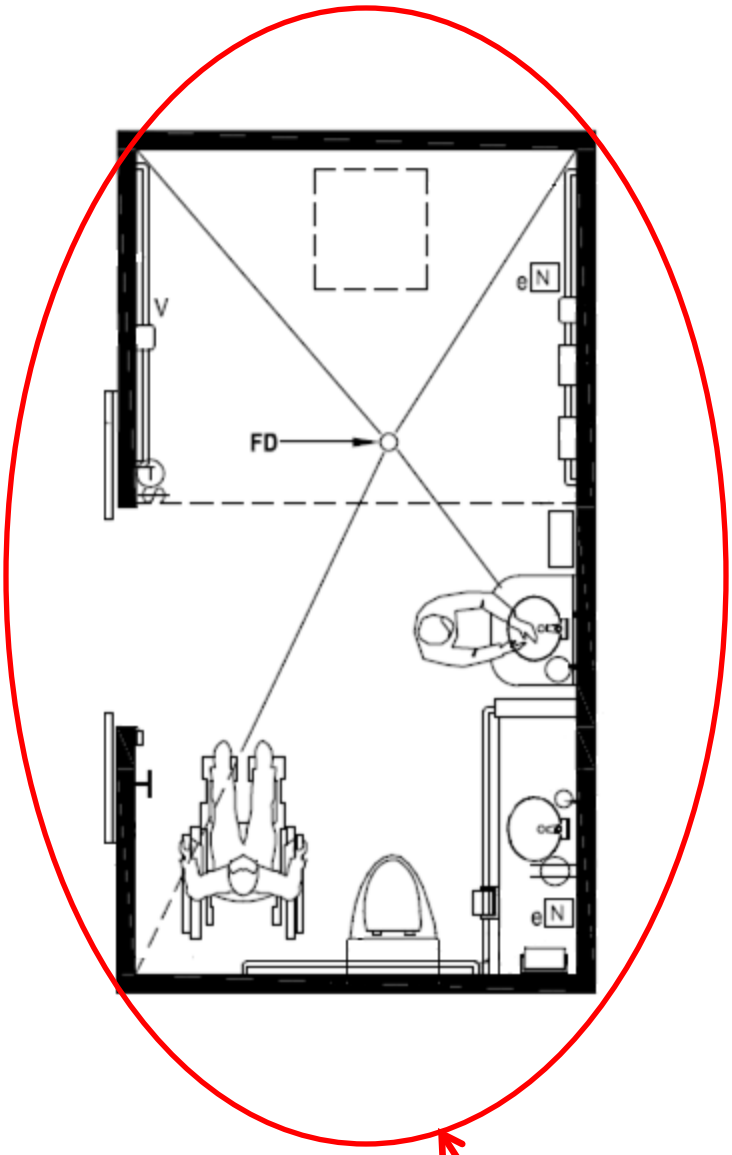

Purpose:

The purpose of this study is to resolve current challenges interpreting the graphic diagrams contained in the SCI Design Guide.

Rational:

Current SCI Acute Care Inpatient facilities under design and construction have encountered numerous conflicts in facilitating SCI Patient's ease in access to cleaning and drying their hands after toileting. The current SCI toilet-vanity as does not clearly indicate the patient's ergonomic mobility to the self-care vanity including wheelchair nesting about the water closet. This study identifies the necessity of a "bump-out" to "nest" the commode wheelchair in plan view as well as elevations indicating a removable raised toilet seat for patients transfers as well as the reaching distance to soap and towel dispensers, toilet paper, lavatory faucet, emergency nurse call, and toilet flushing from wheelchairs and for patients utilizing a commode wheelchair.

Area of study

All notes and annotations from SCI/D Design Guide have been omitted.

Floor Plan: SCI Toilet-Vanity

Extracted from Existing SCI Design Guide-2008, Page 3-25 Scale: NTS 24 August 2011

https://www.cfm.va.gov/til/dGuide/dgscidc.pdf

SK-01

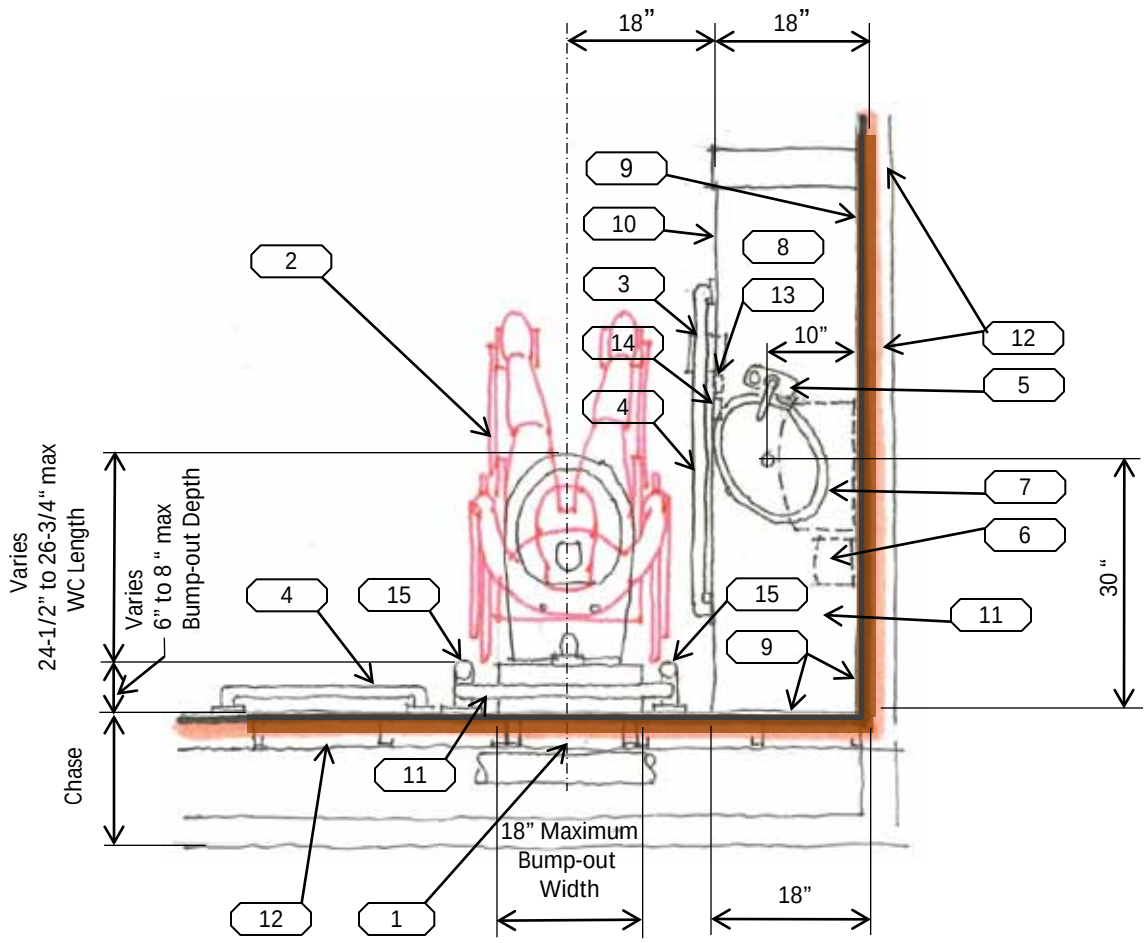

Key Notes:

1. Water Closet Carrier w/ Carrier Extender
2. Hygiene Wheelchair
3. Toilet Paper Holder
4. S/S Grab Bar
5. Gooseneck Faucet-Infrared Actuated
6. Soap Dispenser-Infrared Actuated
7. Paper Towel Dispenser-Infrared Actuated
8. Solid Surface Countertop w/ Integral Sink
9. Solid Surface Backsplash
10. Solid Surface Skirt
11. S/S Grab Bar component of backrest bracket assembly
12. Metal Stud Partition, Cement Board w/ Ceramic Tile Finish
13. Emergency Nurse Call Cord
14. Toilet Flush Actuator Button
15. Stainless Steel Backrest Bracket Refer to PVA sketch SKA 003A

Floor Plan: Acute IP SCI Toilet-Vanity

Scale: 1/2” = 1’-0”

24 August 2011

SK-02

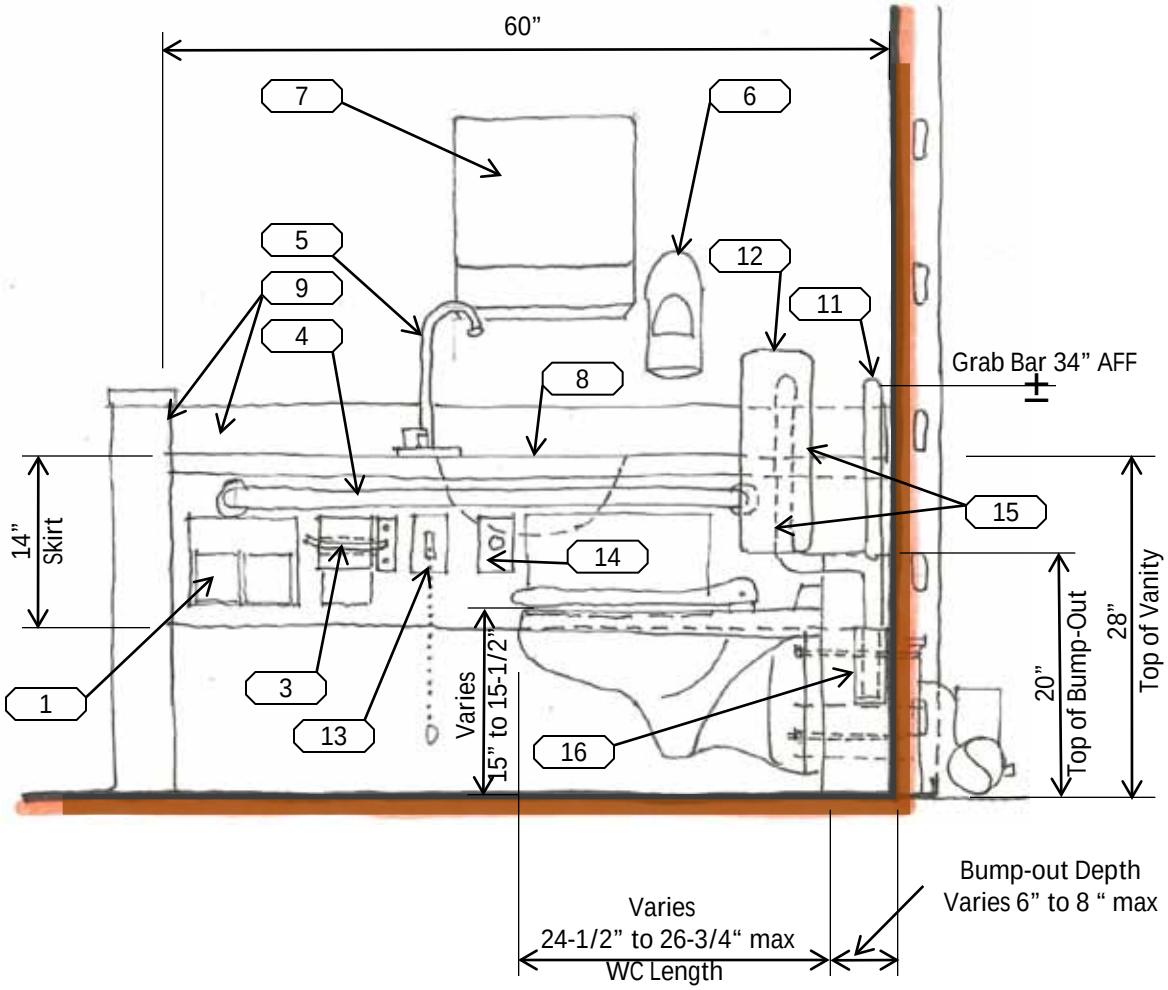

Key Notes:

1. Toilet Tissue Storage “Pocket”
2. Magazine / Lubricant Storage “Pocket”
3. Toilet Paper Holder
4. S/S Grab Bar
5. Gooseneck Faucet-Infrared Actuated
6. Soap Dispenser-Infrared Actuated
7. Paper Towel Dispenser-Infrared Actuated
8. Solid Surface Countertop w/ Integral Sink
9. Solid Surface Backsplash
10. Solid Surface Skirt
11. S/S Grab Bar component of backrest bracket assembly
12. Removable Padded Cushion Backrest
13. Emergency Nurse Call Cord
14. Toilet Flush Actuator Button
15. Stainless Steel Backrest Bracket Refer to PVA sketch SKA 003A
16. Tubular Stainless Steel Backrest Frame Refer to PVA sketch SKA 003A

Elevation: Acute IP SCI Toilet-Vanity

Scale: 3/4” = 1’-0”

24 August 2011

SK-03

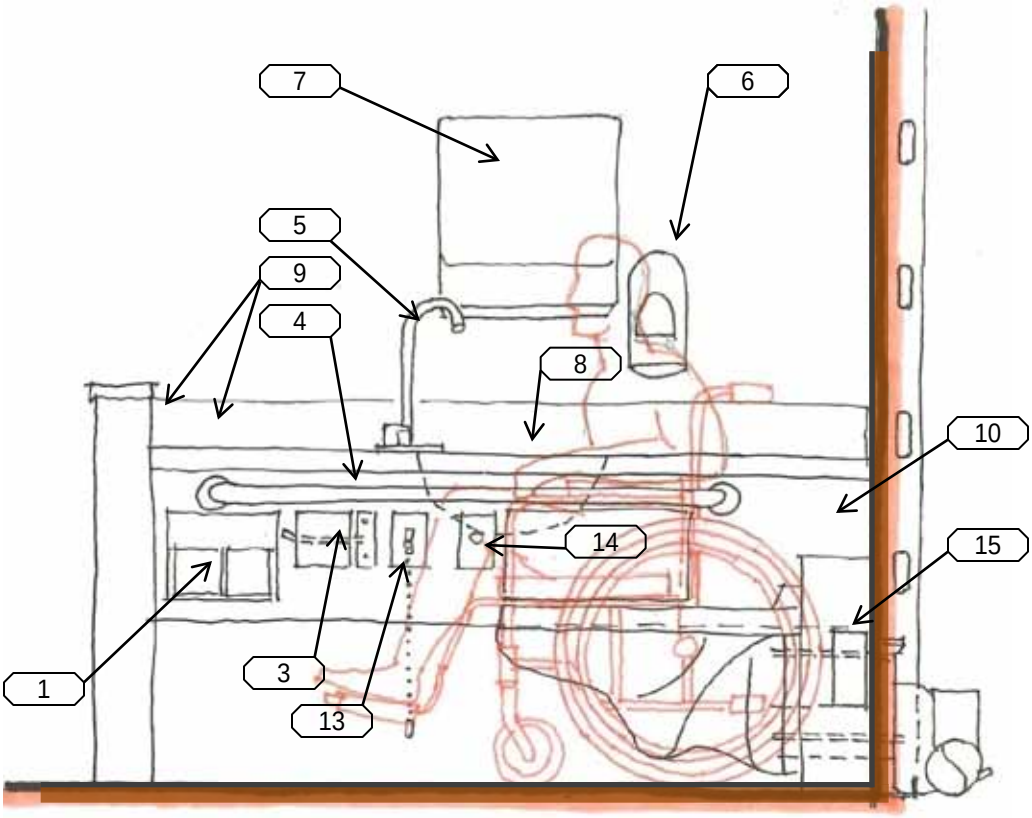

Key Notes:

1. Toilet Tissue Storage "Pocket"
2. Magazine / Lubricant Storage "Pocket"
3. Toilet Paper Holder
4. S/S Grab Bar
5. Gooseneck Faucet-Infrared Actuated
6. Soap Dispenser-Infrared Actuated
7. Paper Towel Dispenser-Infrared Actuated
8. Solid Surface Countertop w/ Integral Sink
9. Solid Surface Backsplash
10. Solid Surface Skirt
11. Solid Surface "Tower" Supporting Soap and Paper Towel Dispensers
12. Removable Padded Cushion Backrest
13. Emergency Nurse Call Cord
14. Toilet Flush Actuator Button
15. Stainless Steel Backrest Bracket Refer to PVA sketch SKA 003
16. Tubular Stainless Steel Backrest Frame Refer to PVA sketch SKA 003A

Elevation with Wheelchair: Acute IP SCI Toilet-Vanity

Scale: 3/4" = 1'-0"

24 August 2011

SK-04

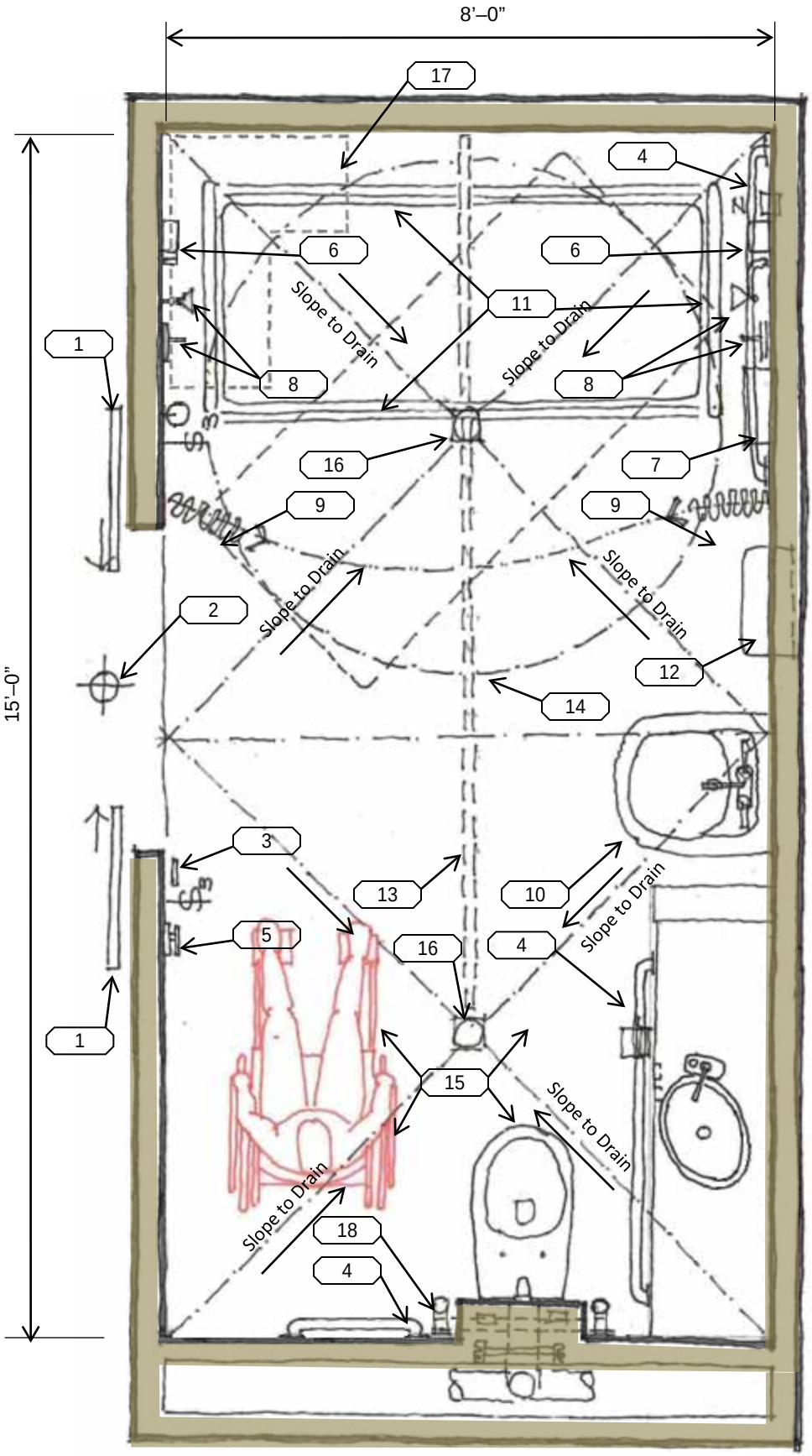

Key Notes:

1. Automatic Sliding Door
2. "In Use" Light Mount Above Door Wire to Bath Light Circuit
3. Automatic Door Control Switch
4. S/S Grab Bar
5. Robe Hook
6. Soap Dish
7. Stainless Steel Shelf
8. Shower Fixture and Mixing Valve
9. Privacy Curtain
10. Caregiver Lavatory
11. Multiple Position Shower Gurney
12. S/S Combination Paper Towel Dispenser-Disposal Container
13. Patient Lift/Transfer Track (Optional)
14. Shower Gurney Maneuvering Zone
15. Patient Transfer & Maneuvering Zone
16. Floor Drain w/ Basket
17. "L"-Shaped Phenolic Fold-up Shower Seat
18. Tubular Stainless Steel Backrest Frame Refer to PVA sketch SKA 003A

Floor Plan: Acute IP SCI Bathroom

Scale: 1/2" = 1'-0" 24 August 2011

SK-05

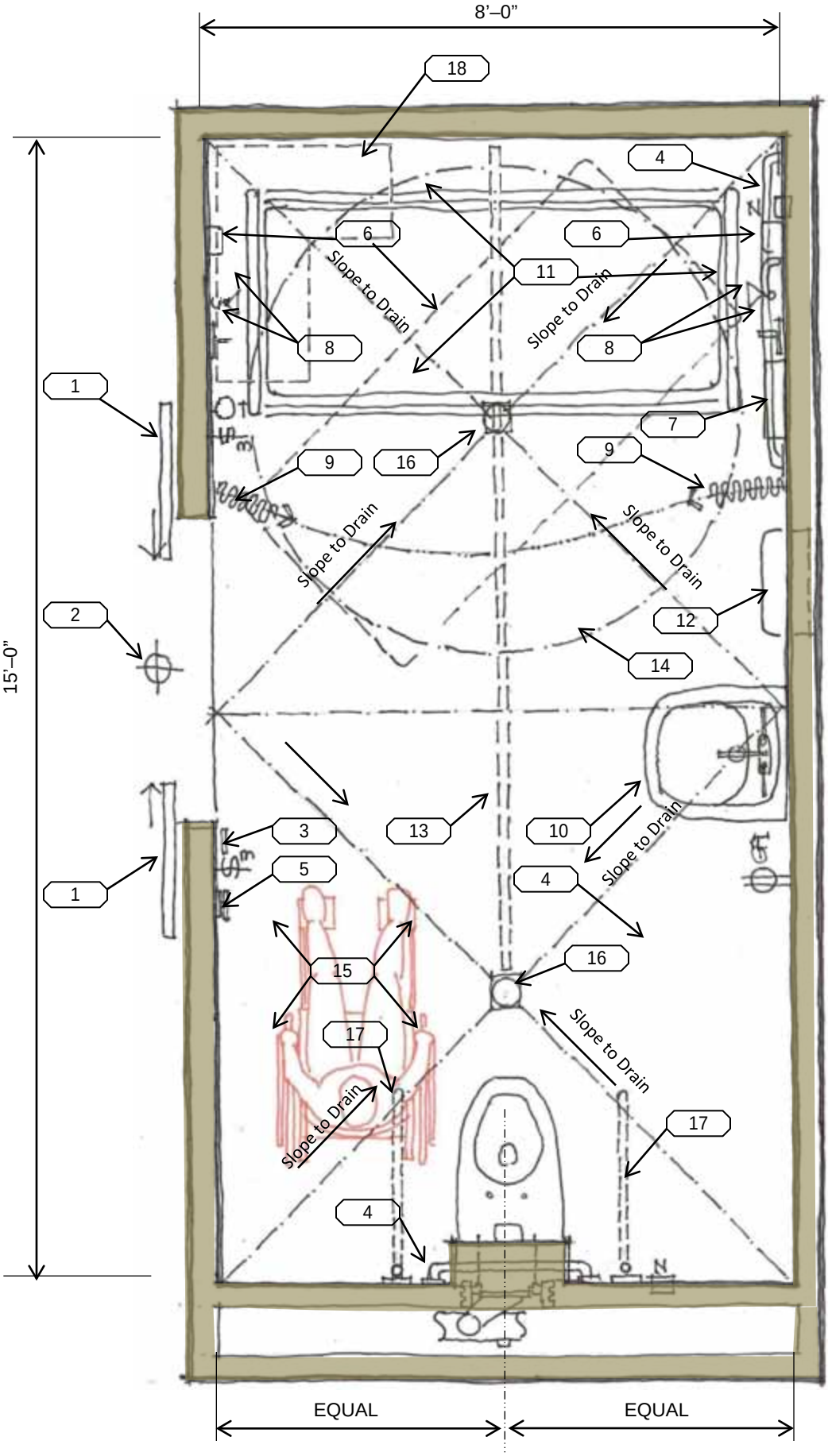

Key Notes:

1. Automatic Sliding Door
2. "In Use" Light Mount Above Door Wire to Bath Light Circuit
3. Automatic Door Control Switch
4. S/S Grab Bar
5. Robe Hook
6. Soap Dish
7. Stainless Steel Shelf
8. Shower Fixture and Mixing Valve
9. Privacy Curtain
10. Caregiver Lavatory
11. Multiple Position Shower Gurney
12. S/S Combination Paper Towel Dispenser-Disposal Container
13. Patient Lift/Transfer Track (Optional)
14. Shower Gurney Maneuvering Zone
15. Patient Transfer & Maneuvering Zone
16. Floor Drain w/ Removable Basket
17. Fold Down S/S Grab Bar
18. "L"-Shaped Phenolic Fold-up Shower Seat

Floor Plan: Long Term Care SCI Bathroom

Scale: 1/2" = 1'-0"

24 August 2011

SK-06

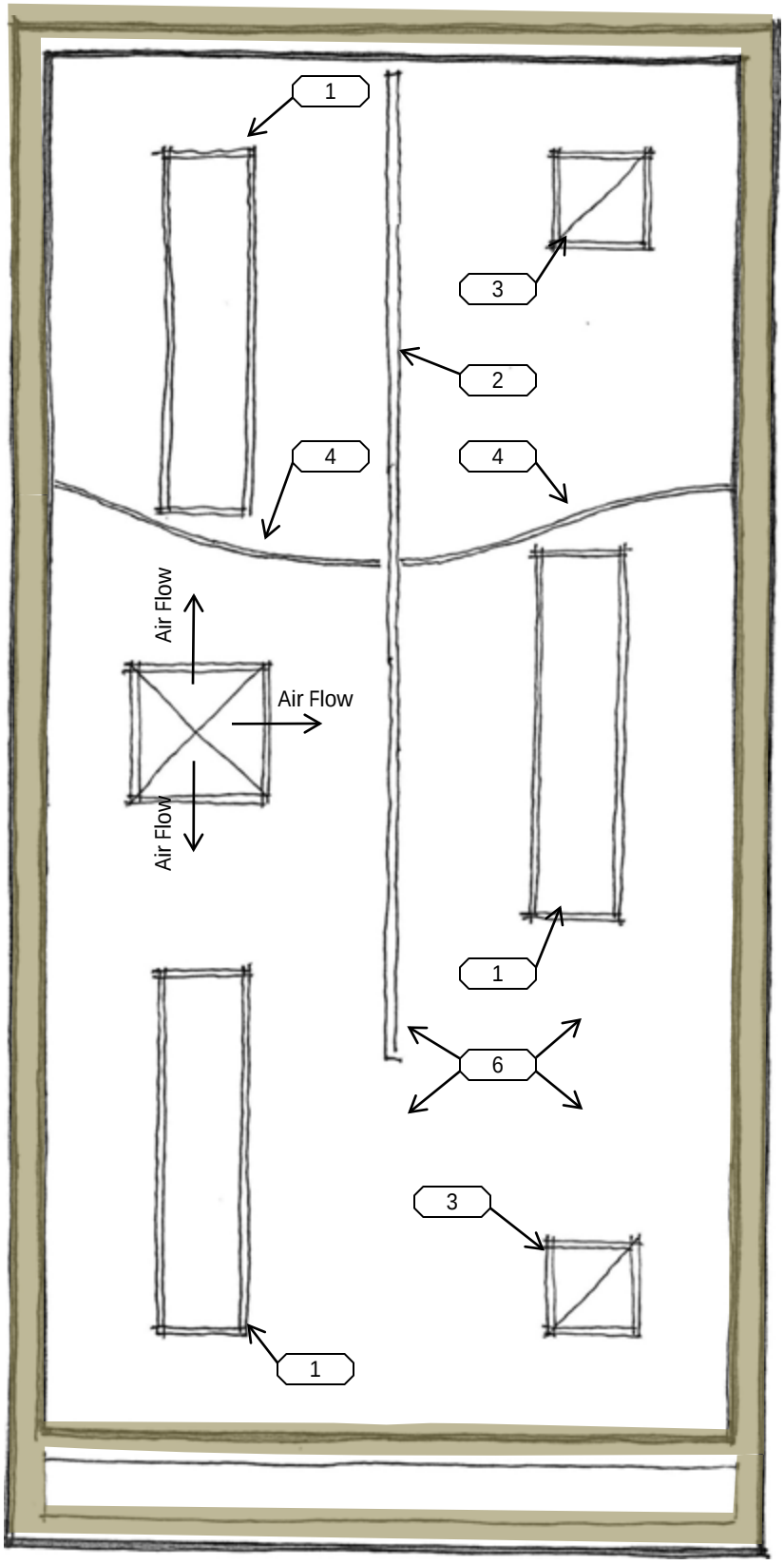

Key Notes:

1. Fluorescent Light Fixture 1 x 4 Wet Environment Application
2. Patient Lift/Transfer Track
3. HVAC Return Grille
4. Privacy Curtain Track
5. HVAC Supply Register 3-Way
6. Gypsum Board Ceiling

Reflected Ceiling Plan:
Acute IP and Long Term Care SCI Bathrooms

Scale: 1/2" = 1'-0"

24 August 2011

SK-07

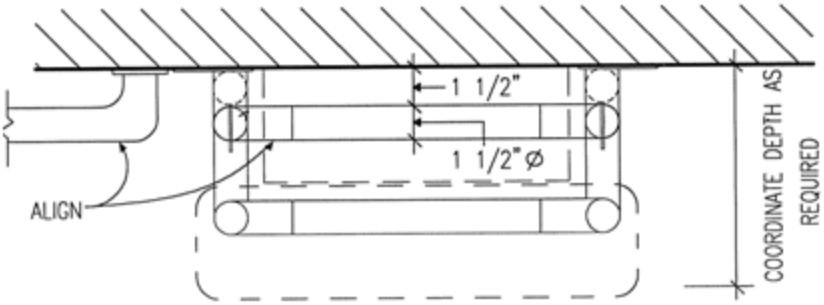

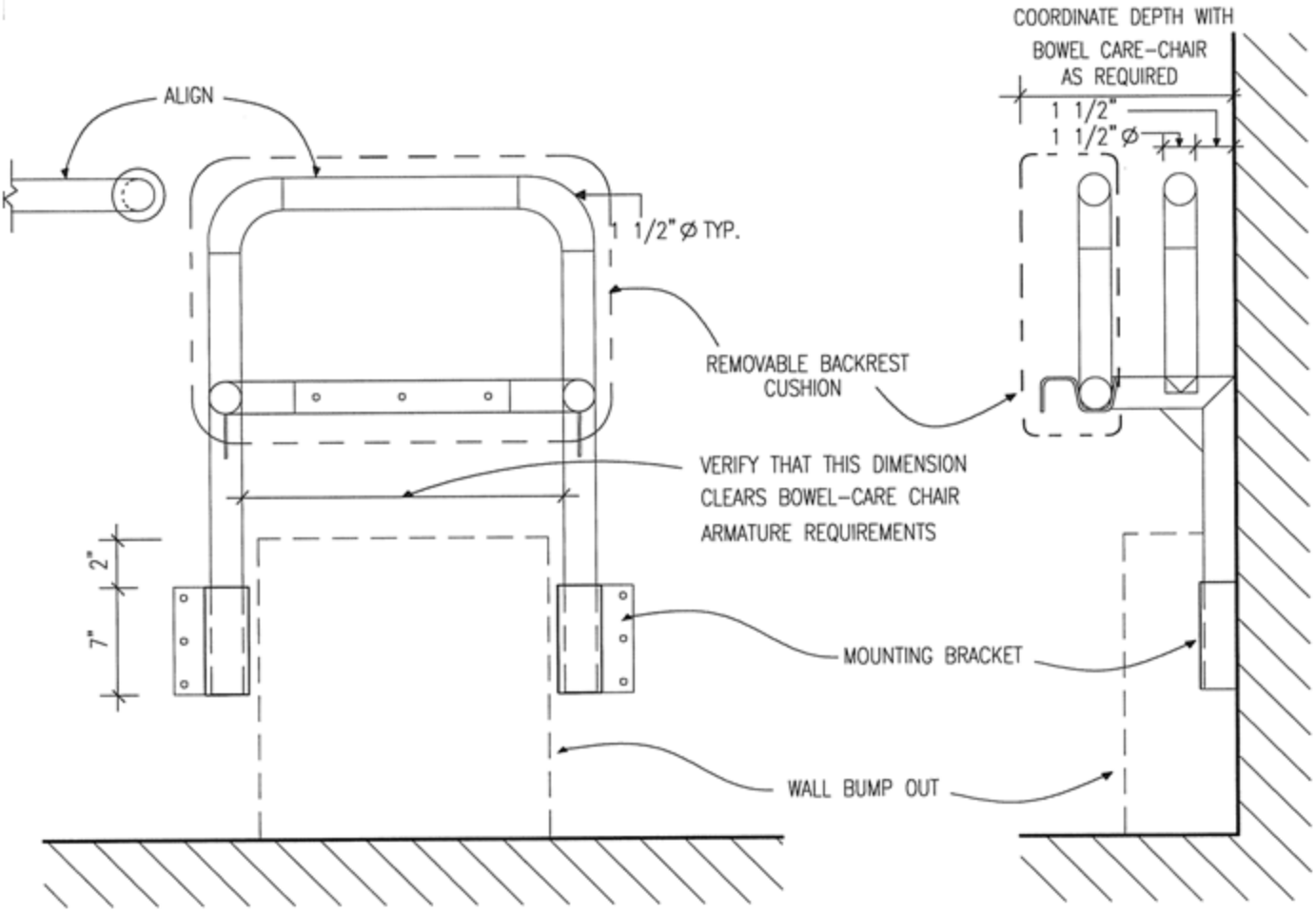

NOTE: 1. SECURE MOUNTING BRACKET TO WALL. PROVIDE OPENINGS AT BOTTOM OF SLEEVE FOR DRAINING.

2. VERTICAL DIMENSION AND MOUNTING HEIGHTS SHALL BE COORDINATED WITH TOILET AND BOWEL CARE-CHAIR REQUIREMENTS.

	BACKREST
PVA ARCHITECTURE	SCI/D CENTER
	SCALE: 1 1/2" = 1'-0"
	DATE:August 17, 2011 SKA 003A

PVA Detail:
Acute IP SCI Bathroom **SK-08**

Scale: 1/2" = 1'-0" 24 August 2011

VA | U.S. Department of Veterans Affairs
Office of Construction & Facilities Management
Office of Facilities Planning
Facilities Standards Service

DESIGN ALERT

APRIL 19, 2012
003C2B-DA-138

Indoor Water Features, Decorative Fountains: Recommend Non-Use

ISSUE: Incidents of healthcare-associated infection by Legionella bacteria, the causative agent of Legionnaires' disease, have been linked to contaminated interior water features. Patients, visitors, and staff who are immunocompromised are particularly vulnerable and, if infected, can have a high mortality rate (1,2,3,4,6).

DISCUSSION: Recently published articles highlight the risk of indoor water features in healthcare facilities. In one report, an indoor water feature in the lobby of a mid-west US hospital was linked to eight cases of Legionnaires' disease; none of the 8 cases were inpatients at the facility at the time of exposure and some were visitors that likely just passed by the water feature on their way through the lobby (3,4,6). In another report, two immunocompromised inpatients developed Legionnaires' disease after exposure to a contaminated water feature in a radiation oncology suite (1,6). The fountain had been shut down for five months and then operational for four months prior to the disease cluster. In both situations, routine maintenance, cleaning and disinfection procedures did not prevent Legionella contamination or growth.

CONCLUSION: Indoor fountains and other water features present a risk in healthcare facilities (1,4,6) and should not be included in new VA healthcare interior design solutions. Where these features are currently installed, adaptive reuse of the space for another form of positive healing environment reinforcement should be considered.

ACKNOWLEDGEMENTS: This Design Alert was developed by a mutual collaborative effort which included the following VA Participants:

- CFM, Facilities Standards Service
- National Infectious Diseases Service (NIDS)
- National Center for Patient Safety

CONTACT: Facilities Standards Service at til@va.gov

REFERENCES:

1. Tara N. Palmore, et al. A Cluster of Nosocomial Legionnaire's Disease Linked to a Contaminated Hospital Decorative Water Fountain. August, 2009. Infection Control and Hospital Epidemiology 30(8):764-768. NIH Public Access Author Manuscript available at http://www.ncbi.nlm.nih.gov/pmc/articles/PMC2886954/pdf/nihms157449.pdf
2. Yusen E. Lin, et al. Prevention of Hospital-Acquired Legionellosis. August, 2011. Current Opinion in Infectious Diseases 24(4)350-356.
3. Journal Article Details Legionnaires' Disease Outbreak Associated with Hospital's Water Wall Fountain, in News@WSLH. January, 2012. Available at http://www.slh.wisc.edu/news/legionnaires_hospital_water_wall.dot
4. Thomas E. Haupt, et al. An Outbreak of Legionnaires Disease Associated with a Decorative Water Wall Fountain in a Hospital. February, 2012, Infection Control and Hospital Epidemiology 33(2):185-191.
5. Deanna Martin, American Society for Healthcare Engineering of the American Hospital Association. Hospitals Should Prepare Now for ASHRAE's Upcoming Legionella Standard. Health Facilities Management Magazine, February, 2012. Available at http://www.hfmmagazine.com/hfmmagazine_app/jsp/articledisplay.jsp?dcrpath=HFMMAGAZINE/Article/data/02FEB2012/0212HFM_FEA_CodesStandards&domain=HFMMAGAZINE
6. FGI 2010 Guidelines for Design and Construction of Health Care Facilities, Published by ASHE (American Society for Healthcare Engineering of the American Hospital Association)

U.S. Department of Veterans Affairs

Office of Construction & Facilities Management

Office of Facilities Planning
Facilities Standards Service

DESIGN ALERT

JUNE 1, 2014, REV NOVEMBER 1, 2014
003C2B-DA-142

For Immediate Application on all Current Projects Patient Safety in VHA Bathrooms

ISSUE: The VA National Center for Patient Safety has identified three recent VA projects with the following patient safety issues: a lack of slip resistant flooring and water ponding in Inpatient Bathrooms and Tub rooms. These conditions increase the potential for patient and staff falls.

DISCUSSION: CFM standards are consistent in calling for slip resistant flooring materials in bathrooms. The current VA Master Specification for Ceramic & Porcelain Tiles for Bathroom Floors (09 30 13, CERAMIC/PORCELAIN TILING) calls for Slip Resistance with a coefficient of friction equal to or greater than 0.42 for interior tile floors when wet in accordance with ANSI A137.1.

VA combats ponding and standing water in accessible bathrooms by calling for 3" slab depressions coupled with a maximum floor slope of a ¼" per foot tapered to a floor drain. This VA standard is found in section 4.30.2 entitled Shower Floors, under Chapter 4 of the Architectural Design Manual of PG 18 10. The intent is to have the slab depression for the entire bathroom floor area to allow for a gentle taper to a floor drain in the shower.

CONCLUSION: Patient & staff safety is a very serious concern. VA Design Criteria and Construction Standards in the Technical Information Library (TIL) are in place to assure the safety, security, and quality of optimum healthcare. VA Standards are required for all VA projects, whether new, renovation, or retrofit projects. Architects, Engineers, Designers, Contracting Officers, Project Managers, and Administrators should work closely with CFM to apply Standards appropriately to every project, to ensure consistency and safety to every VA project. The need for bathroom floors made of slip resistant materials and a proper slope to drain needs to be clearly understood as an essential design component.

CORRECTIVE ACTIONS: Revise Peer Review Checklist to include verification of slip resistant material and verification of floor slope to drain in submittal requirements for entire bathroom and tub room floor areas.

Revise Spec. Section 09 30 13, CERAMIC/PORCELAIN TILING. Under Article 3.3, Paragraph C, add Subparagraph 6 requesting verification of slope to drain.

Revise appropriate Design Guides, Manuals, and other criteria for consistency and enforcement of standard.

ACKNOWLEDGEMENTS: This Design Alert was developed by a mutual collaborative effort which included the following VA Participants:

- National Center for Patient Safety
- CFM, Consulting Support Service
- CFM, Facilities Standards Service

CONTACT: Facilities Standards Service at til@va.gov

U.S. Department of Veterans Affairs

Office of Construction & Facilities Management

Office of Facilities Planning
Facilities Standards Service

DESIGN ALERT

MAY 19, 2015
003C2B-DA-144

Physical Security Design Manual for Mission Critical Facilities (January 2015 Edition)

Revisions to Telecommunications Systems Uninterruptable Power Supply Requirements

ISSUE: Revisions of the manual are needed in order to provide appropriate levels of Uninterruptable Power Supply (UPS) in Demarcation Room and Main Computer Room per VA Office of Information and Technology (OIT).

CONCLUSION:

1) Revise section 9.3.1.3 (Telecommunications Systems/Demarcation Room/Power) of the 2015 PSDM to: "All equipment in the demarc room shall be powered from UPS equipment that will provide a minimum of 1 hour of service at full rated output. If the demarc room is part of the main computer room, then UPS is not required. In addition, a risk analysis shall be performed to demonstrate the need for compliance with NEC Article 708, Critical Operations Power Systems. Compliance with the provisions of NEC 708 may be required for the electrical systems serving the demarc room, including but not limited to upstream electrical distribution equipment."

2) Revise section 9.3.2.3 (Telecommunications Systems/Main Computer Room/Power) of the 2015 PSDM to: "All equipment in the main computer room shall be powered from UPS equipment that will provide a minimum of 4 hours of service at full rated output. In addition, a risk analysis shall be performed to demonstrate the need for compliance with NEC Article 708, Critical Operations Power Systems. Compliance with the provisions of NEC 708 may be required for the electrical systems serving the main computer room, including but not limited to upstream electrical distribution equipment.

ACKNOWLEDGEMENTS: This Design Alert was developed by a mutual collaborative effort which included the following VA Participants:

- CFM, Facilities Standards Service
- Office of Information and Technology (OIT)

CONTACT: Facilities Standards Service at til@va.gov

U.S. Department of Veterans Affairs

Office of Construction & Facilities Management

Office of Facilities Planning
Facilities Standards Service

DESIGN ALERT

SEPTEMBER 1, 2016
003C2B-DA-147

VA Project Design Principles – Foundation of Design (VAIQ 7657742)

ISSUE: In all VA planning, design and construction it is imperative that all parties acknowledge Veterans and taxpayers as the ultimate customer and avoid spectacle, branding, and unwarranted customizations which result in elaborate, complex, and expensive building elements. All parties in the planning, design, and construction process must embrace the foundation principles set forth herein as fundamental in providing optimum environments for Veterans care and services in fulfilling VA's mission.

BACKGROUND: The Department of Veterans Affairs (VA) design and construction program is an essential element of commitment to effectively and efficiently accomplish VA's missions. VA is entrusted with extraordinary taxpayer resources and designers and constructors are obligated to not only our Nation's Veterans but also the Nation's taxpayers to make the most effective and efficient use of these resources.

DISCUSSION: The Office of Construction and Facilities Management supports the Department's mission through disciplined planning, design and construction of VA facilities. Following the VA *Foundation of Design* principles throughout all projects will ensure VA provides high quality, high performance, flexible facilities within scope, on budget, and on time.

REQUIREMENT: The attached memoranda define the *Foundation of Design* and the mission, values and obligations upon which our project designs must be grounded. All parties in the design and construction process must follow the *Foundation of Design* and VA *Project Design Principles* as fundamental in all VA planning, design and construction.

CONTACT: Don Myers (202-632-5388), Donald.Myers@va.gov

Department of Veterans Affairs

Memorandum

Date: JAN 18 2016

From: Executive Director, Office of Construction & Facilities Management (003C)

Subj: Implementation of Project Design Principles (VAIQ 7665375)

To: Under Secretaries, Assistant Secretaries, and Other Key Staff Officials

1. This is to share my recent memorandum on project design (attached). Building on the Department of Veterans Affairs (VA) Deputy Secretary's memorandum, VA Major Construction Policy – Roles and Responsibilities, dated September 2, 2015, the Office of Construction & Facilities Management seeks to support the Department's mission through disciplined planning, design and construction of VA facilities projects. The attached memorandum defines the mission, values and obligations upon which our project designs must be grounded.

2. VA is entrusted with extraordinary taxpayer resources and designers and constructors are obligated to not only our Nation's Veterans but also the Nation's taxpayers to make the most effective and efficient use of these resources. Following these VA foundation principles throughout all projects will ensure VA provides high quality, high performance, flexible facilities within scope, on budget, and on time.

3. It is imperative that all parties acknowledge Veterans and taxpayers as the ultimate customer and avoid spectacle, branding, and unwarranted customizations which result in elaborate, complex, and expensive building elements. All parties in the design and construction process must embrace the foundation principles as fundamental in providing optimum environments for Veteran care and services in fulfilling VA's mission.

Stella S. Fiotes

Stella S. Fiotes, AIA

Attachment

cc: CFM Staff

Department of Veterans Affairs

Memorandum

Date: NOV 2 4 2015

From: Executive Director, Office of Construction & Facilities Management (003C)

Subj: Foundation of Project Design (VAIQ 7657742)

To: Office of Construction & Facilities Management Staff

1. The Department of Veterans Affairs (VA) design and construction program is an essential element of commitment to effectively and efficiently accomplish VA's missions. This memorandum outlines the required basic principles to follow in the design of VA projects. These principles reinforce what is expected and required of VA staff and consulting architects and engineers.

2. VA's prime mission is to fulfill President Lincoln's promise "To care for him who shall have borne the battle, and for his widow, and his orphan" by serving and honoring the men and women who are America's Veterans. VA accomplishes this mission by following VA's principles of Integrity, Commitment, Advocacy, Respect, and Excellence (I-CARE).

3. The Office of Construction & Facilities Management (CFM) mission supports our Nation's Veterans by planning, designing, constructing, and acquiring facilities; setting effective life cycle design and construction standards; and being trusted leaders in delivering health care facilities and other facilities.

4. VA is entrusted with extraordinary taxpayer resources to accomplish its mission. There is a fundamental obligation to Veterans and the public trust for the most effective and efficient use of resources. This obligation requires that every dollar be used to its maximum benefit. VA facilities must deliver exceptional value by producing high quality, high performance and flexible facilities, on budget and on time. CFM's Technical Information Library (TIL) publishes the standards established to help achieve these attributes.

5. Architectural form and style must be firmly grounded on function, technology, and context. Designs must embody contemporary American architectural thought and technology, consider local context and regional architectural traditions, and provide a safe and healthy environment. Designs should avoid architectural and engineering exhibitionism and spectacle; fleeting style, trends, and fashion; firm-branded features; elaborate, complex, difficult, and expensive to construct and maintain building elements such as curved facades and rooflines; monumental interior and exterior features; unduly expansive atriums; and other superfluous architectural finishes and details. Constructability, flexibility, security, sustainability, durability, maintenance, and life cycle cost shall be carefully integrated for maximum value.

Subj: Foundation of Project Design (VAIQ 7657742)

6. In summary, VA staff and consulting architects and engineers must help realize the VA missions through design and construction that honors and serves our Nation's Veterans by providing world class health care, benefits, and memorial facilities that embody optimum performance in functionality, flexibility, quality, safety, security, accessibility, wayfinding, resilience, sustainability, maintainability, and economy.

Stella S. Fiotes

Stella S. Fiotes, AIA

U.S. Department of Veterans Affairs

Office of Construction & Facilities Management

Office of Facilities Planning
Facilities Standards Service

DESIGN ALERT

JUNE 1, 2017
003C2B-DA-148

VA Standards Application and User Design Input Requirements

ISSUE: There have been reports that clinicians, users and stakeholders have not been included to provide critical input in the design process, and VA Planning, Design, and Construction Standards have not been consistently applied as a basis of planning and design to VA projects, resulting in partial or complete functional and operational failures of completed and/or recently activated projects.

BACKGROUND: VA Program Offices, project teams, designers and constructors, are obligated to our Nation's Veterans and taxpayers to make the most effective and efficient use of resources, by providing a continuum of safe, secure, high quality, high performance, and high value environments of care and service for Veterans. The Office of Construction & Facilities Management (CFM) supports the Department's mission through development and application of standards as a basis for disciplined planning, design, and construction of VA facilities.

DISCUSSION: Following VA Technical information Library (TIL) Standards (https://www.cfm.va.gov/TIL) and active participation of facility user/stakeholder groups in the application of Standards for all projects will ensure VA provides optimally functional, high quality, high performance, and flexible facilities within scope, on budget, and on time in accomplishment of VA's missions.

REQUIREMENT: In all phases of Planning, Design, and Construction, for all VA projects it is required:

1) All applicable VA Standards published in the VA Technical Information Library (TIL) (https://www.cfm.va.gov/TIL) shall be applied as a basis, foundation, and framework in planning, design, and construction. Any substantial variance from Standards shall be considered only as required to accommodate specific site, functional, and operational conditions. Upon consideration of variance CFM shall be consulted, and each Administration will function as Authority Having Jurisdiction for decision. Each substantial variance shall have a basis rationale and be documented in the project record;

2) Clinicians, providers, primary users, and other stakeholders shall be involved in all phases of project development to best adapt Standards for specific functional, operational, and site conditions, and to provide optimum service environments for Veterans. This also includes installations and modifications of systems or technology involving safety, security, functionality, or environmental quality. Stakeholder involvement shall be documented in the project record.

All parties in the planning, design, and construction process must embrace these requirements as fundamental in providing optimum environments for Veterans' care and services, in fulfilling VA's mission.

CONTACT: Don Myers (202-632-5388), Donald.Myers@va.gov

U.S. Department of Veterans Affairs

Office of Construction & Facilities Management

Office of Facilities Planning
Facilities Standards Service

DESIGN ALERT

OCTOBER 1, 2018
003C2B-DA-149

Design for Patient Privacy and Women Veterans' Health

ISSUE: Per VHA Directive 1330.01, dated (February 15, 2017- Amended: July 23, 2018) Health Care Services for Women Veterans and direction given by the Principal Executive In Charge Veterans Health Administration, in meeting on April 9, 2018, changes in VA Design Guides and other criteria are necessary to implement environment of care requirements for Women Veterans and to extend these requirements to healthcare environments for all Veterans.

BACKGROUND: VHA Program Offices, VAMCs, project teams, designers and constructors, are obligated to our Nation's Veterans and taxpayers to make the most effective and efficient use of resources and provide safe, secure, quality, and high value environments of care. The Office of Construction & Facilities Management (CFM) supports the Department's mission through development and application of Standards as a basis for disciplined planning, design, and construction (PDC) of VA facilities. PDC Standards are published in the VA Technical Information Library (TIL) (https://www.cfm.va.gov/TIL). Pursuant to the revised Directive and VHA Executive direction it is necessary to make adjustments to certain VA PDC standards including PG-18-12 Design Guides (https://www.cfm.va.gov/til/dGuide.asp).

DISCUSSION: VA Planning Design and Construction (PDC) Standards are required as a basis of design for all new, renovation and retrofit projects. The following outlines changes to basic Standards for planning and design of the environment of care supporting patient privacy and dignity Illustrations are provided showing the basic principles of patient privacy and modifications to selected room templates. Many of the elements listed below are confirmations of existing criteria and its importance in meeting the privacy and dignity requirements. The basic principles driving these changes are included so-as-to provide a vehicle for adaptation of standards to existing environments.

REQUIREMENT:

1) Design Principles for Patient privacy/dignity.

   a) Door Hardware/Privacy Locks- Specify all locksets shall allow a safe exit from a locked room without the use of a key or code. Staff members shall be provided key(s) or code(s) to allow operation of locks for emergency access into the room. Ref. VA PG-18-14 Room Finishes/Door and Hardware Schedule (https://www.cfm.va.gov/til/spclRqmts.asp#room). Locksets are required on the rooms identified for the rooms, but not limited to those, listed below:

(1) Private toilets, baths, and showers: appropriate, function specific, privacy locks (either electronic or manual) are required at entry door(s), allowing staff members to have key or code access in case of emergency.

(2) Examination, procedure, and treatment rooms: appropriate privacy locks (either electronic or manual) are required at entry door(s), allowing staff members to have key or code access in case of emergency.

(3) Resident sleeping rooms: appropriate privacy locks (either electronic or manual) are required at entry door(s).
Exception: Inpatient Acute Care and Intensive Care patient rooms do not require privacy locks.

b) Privacy Curtains / Screens – See attached Room Illustrations. In extenuating conditions, disposable privacy curtains, portable screens, integrated blinds in glass, or other similar systems must be considered. If, due to specific existing conditions or operational requirements, it is not possible to provide a visually private patient changing area, the facility must establish a policy to ensure patient privacy while changing.

(1) Examination, procedure, and treatment rooms- provide privacy curtains/screens to encompass adequate space for the healthcare provider to perform examination unencumbered by the curtain, and provide a visually private patient changing area that allows the provider to remain in the room.
Exception: Patient care rooms where a patient does not have potential for exposure of breast or genital areas.

(2) In-patient rooms (private / semi-private / multi-patient) - Provide privacy curtains to encompass adequate space for healthcare provider to perform bed-side examination unencumbered by the curtain. In these rooms the primary purpose of the bedside curtain is to provide the patient visual privacy from the room entry door during an examination or treatment and secondarily a visually private patient changing area where the provider, or other healthcare staff, can remain in the room.
Exception: Patient rooms in: Mental Health in-patient units, Intensive Care Units, Recovery, Emergency Departments, dedicated airborne infection isolation rooms, and other rooms with infection control concerns. In these rooms, provide disposable privacy curtains, portable screens, integrated blinds in glass, or other similar systems.

(3) Resident sleeping rooms (multi-bed sleeping rooms) – provide privacy curtains which encompass adequate space for healthcare provider to perform bed-side examination unencumbered, and provide a visually private patient changing area where the provider or other healthcare staff can remain in the room.
Exception: Private resident sleeping rooms do not require curtains.

c) Diaper Changing Tables and Signage

(1) Provide diaper changing tables in designated public male, female, unisex, toilet rooms /restrooms, and all family restrooms; Provide a minimum of one per floor in male, female, and unisex restrooms. Toilet rooms/restrooms shall be no more than 300 feet within a building from areas accessible to a patient.

(2) Public toilet rooms/restrooms with changing tables must be appropriately identified in accordance with the VA's Signage and Wayfinding Design Guide https://www.cfm.va.gov/til/spclRqmts.asp#SIGN .

(3) Public toilet rooms/restrooms without diaper changing tables shall have signage directing users to the nearest appropriate facility with a changing table. Signage shall be posted outside near the toilet room/restroom entrance and conspicuously within the toilet room/restroom.

(4) Toilet rooms/restrooms that include Baby Changing Stations must include the appropriate identification on the signage. Below are the VA signage graphics that comply with the VA Signage Design Guide. CFM Signage Manual requirements. Ref. Chapter 09: Interior Signs: pages 9-4-3 and 9-5-29.

(5) For restrooms not designated as containing Diaper Changing Tables, signage shall be placed to indicate to users where the nearest available diaper changing table can be accessed. Signage shall be posted outside the restroom, near the restroom entrance and conspicuously within the restroom.

d) Tampon/Sanitary Napkin Dispensers and Disposal Bins – Applicable to toilet rooms / restrooms listed below:

(1) Public toilet rooms/restrooms- sanitary napkin/tampon dispensers and disposal bins are required in each Women, Unisex, and Family toilet room/restroom.

(2) Non-public toilet rooms/restrooms accessible from or adjacent to examination rooms where pelvic examinations are performed- sanitary napkin/tampon dispensers and disposal bins are required in each restroom.

(3) Multi-stall public female toilet rooms/restrooms- disposal bins are required in each stall.

e) Gender Specific Clothing – Provide space, shelving, or casework required to stock appropriate clothing (e.g. robes, pajamas, patient gowns, etc.) for distribution for use in all healthcare settings.

f) Exam/Treatment/Procedure/Diagnostic Table Orientation - See attached Room Illustrations. All examination, treatment, procedure, and diagnostic tables must be placed in such a way that the genital area is not visible from the doorway.
Exception: Treatment/procedure bays (e.g. PACU, ED, Dental) and immovable diagnostic tables in imaging rooms including: Radiology, R & F, Mammography, Ultra-Sound, PET, CT, MRI, Nuclear Medicine, and Surgical Suites are exempted from this requirement.

g) Visual Privacy in Reception/Check-in/Waiting Areas - Veterans must be provided adequate visual privacy at clinic check-in, waiting areas and non-public clinic areas. This privacy includes the following:

(1) Patient names or other PII information shall not be posted in corridors or in public and restricted access clinic areas.

(2) At check-in locations a designated "queue line" is to be marked to provide an identifiable physical distance separation between the person checking in and the queue. The minimum distance from the front edge of the Check-in/Reception desk to the queue line shall be five (5) feet.

(3) Acoustical partitions are to be installed to provide visual privacy at multi-patient check-in counters.

(4) Provide a private room/area (e.g. private interview room, separate interview station) to accommodate private discussions such as conversations requiring more details than basic patient identification

2) Design Guides and Room Templates will be systematically revised to include the requirements of this Design Alert.

3) All parties in the planning, design, and construction process must comply with these requirements as fundamental in providing optimum environments for Veterans' care and services, in fulfilling VA's mission.

CONTACT: Don Myers (202-632-5388), Donald.Myers@va.gov

4.3.4A Patient Care Room, Exam Function ("Exam Room")

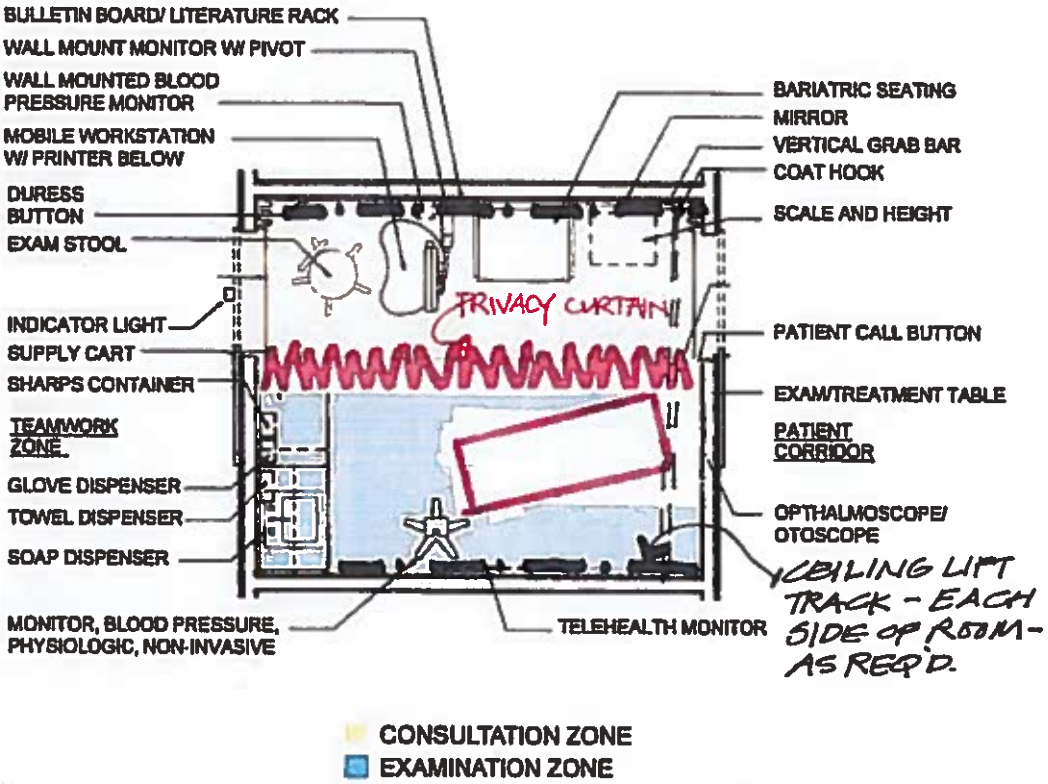

Illustration 1

Ultrasound Room (XDUS1) 180 NSF

Floor Plan 16.8 NSM

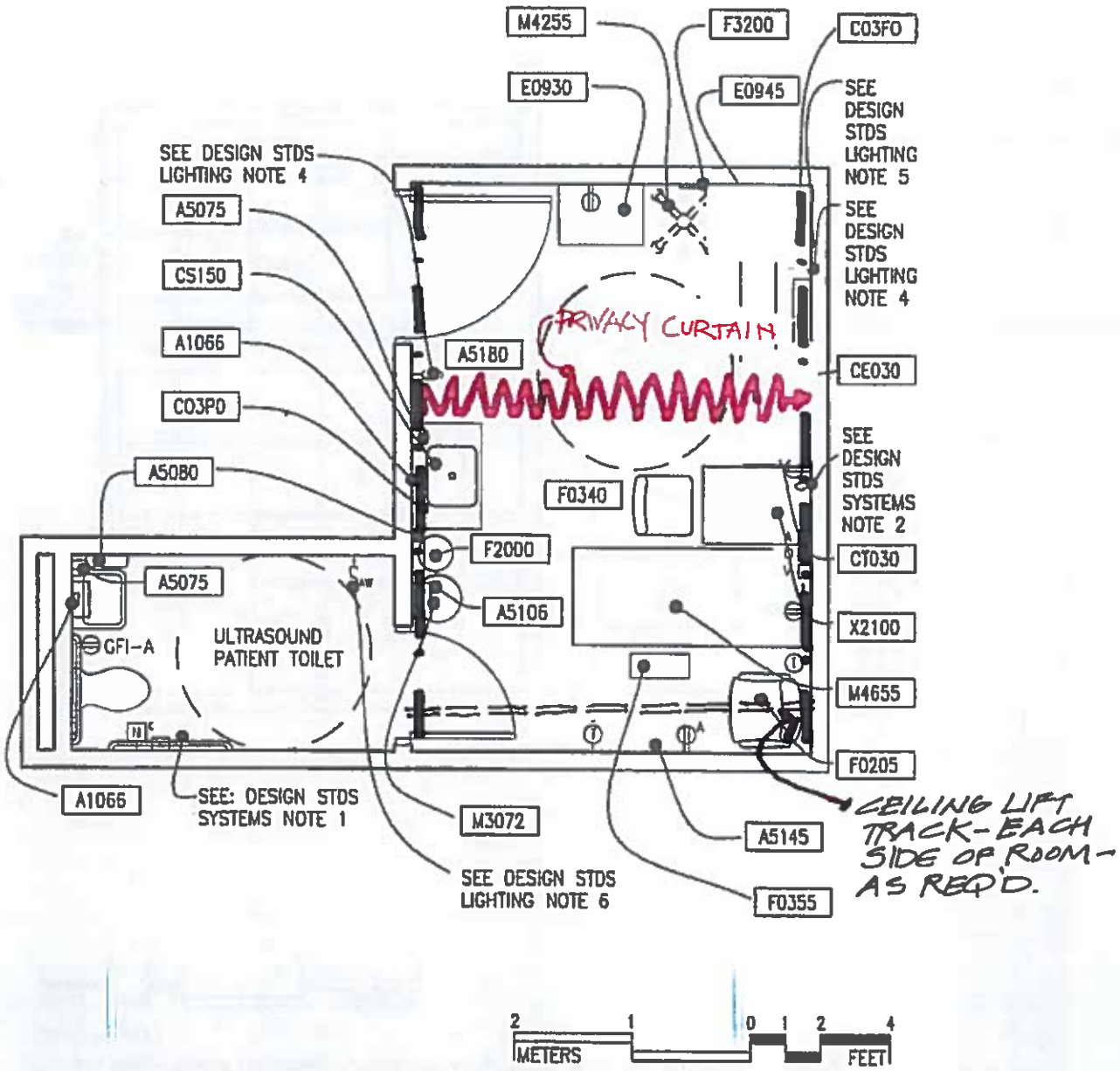

Guide plates are graphical representations of selected room types, illustrating the integration of space, components, systems, and equipment. They provide typical configurations and general technical guidance, and are not intended to be project specific. Specific infrastructure design requirements are contained in VA Design Manuals and Space Planning Criteria located in the VA Technical Information Library.

Department of Veterans Affairs

Illustration 2

Mammography Room (XDM01) — 160 NSF

Floor Plan — 14.9 NSM

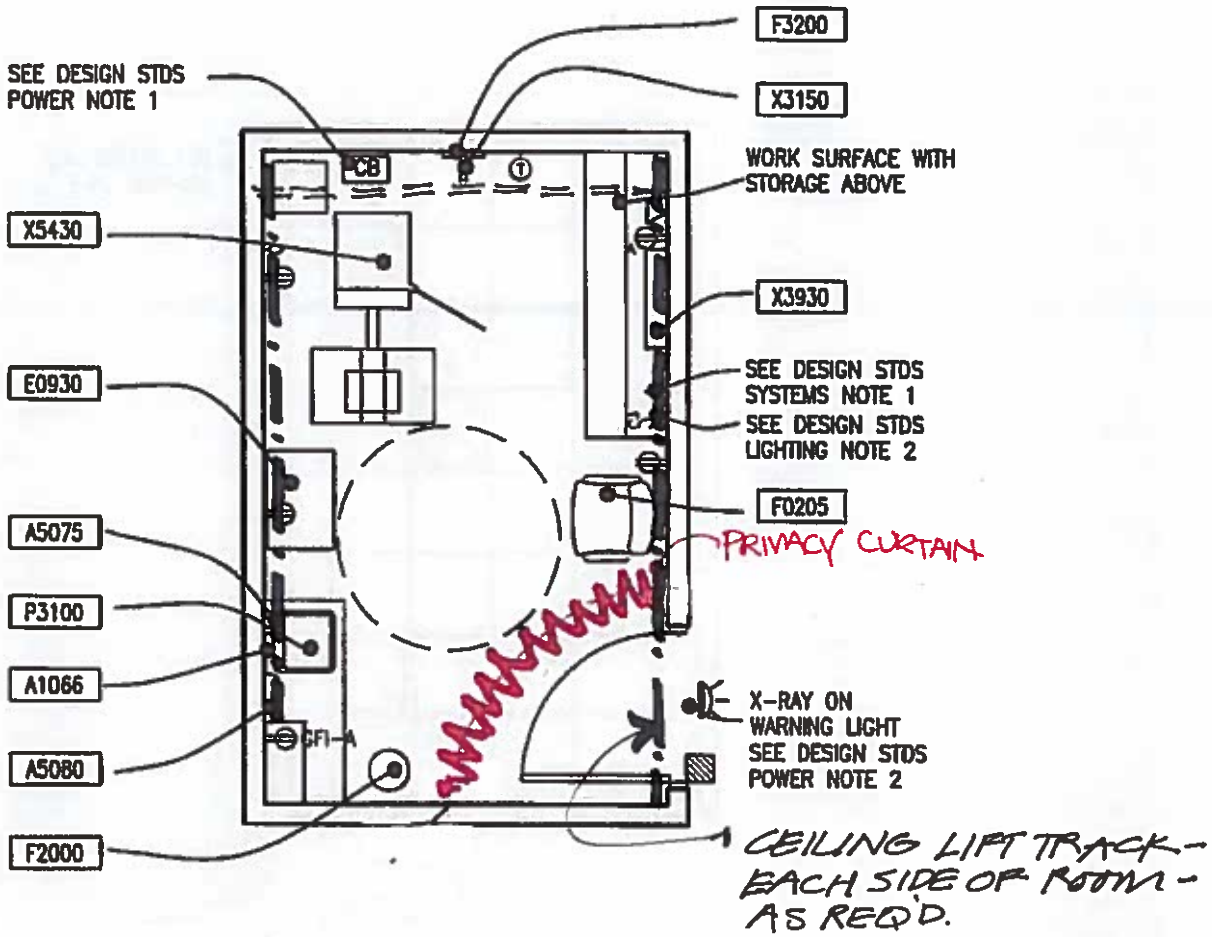

Guide plates are graphical representations of selected room types, illustrating the integration of space, components, systems, and equipment. They provide typical configurations and general technical guidance, and are not intended to be project specific. Specific infrastructure design requirements are contained in VA Design Manuals and Space Planning Criteria located in the VA Technical Information Library.

Department of Veterans Affairs

Illustration 3

PATIENT ROOM (BRMS1)

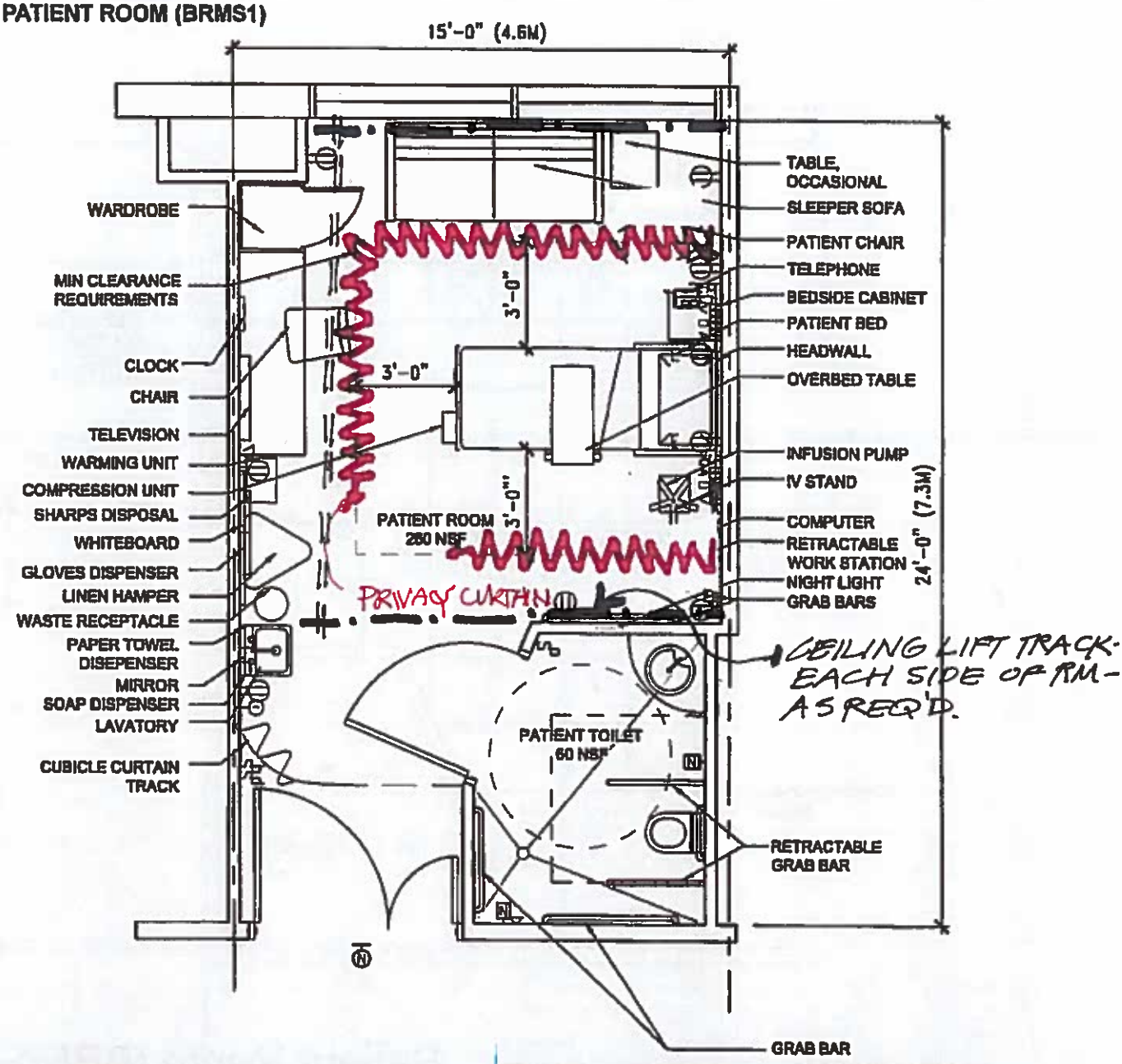

Patient Room (BRMS1)

M 2 1 0 1 2 4Ft

Medical Surgical Inpatient Units & Intensive Care Nursing Units
Floor/Equipment Plan (280 NSF / 26.0 NSM)

NOTE: Guide plates are graphical representations of selected room types, illustrating the integration of space, components, systems, and equipment. They provide typical configurations and general technical guidance, and are not intended to be project specific. Specific infrastructure design requirements are contained in VA Design Manuals and Space Planning Criteria located in

Department of Veterans Affairs

Illustration 4

CBOC, XDR01, GENERAL PURPOSE
RADIOLOGY ROOM - PLAN

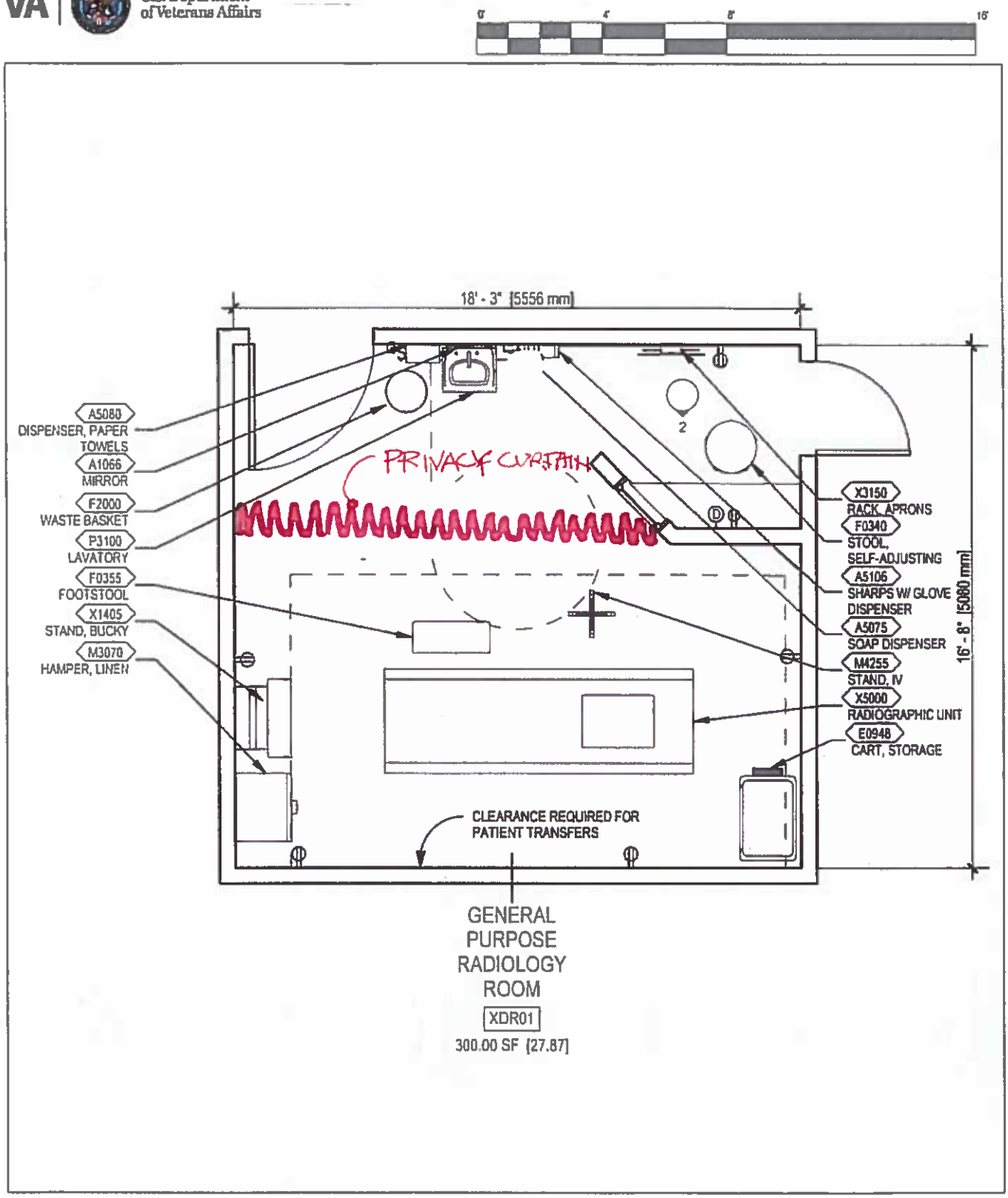

DISCLAIMER: ROOM TEMPLATES ARE GRAPHICAL REPRESENTATIONS OF SELECTED ROOM TYPES THAT ILLUSTRATE VA PLANNING REQUIREMENTS FOR SPACE, ROOM CONTENTS, AND ROOM SPECIFIC ENGINEERING SYSTEMS. THEY PROVIDE TYPICAL CONFIGURATIONS, PLANNING CRITERIA, AND GENERAL TECHNICAL GUIDANCE, AND ARE NOT INTENDED TO BE PROJECT SPECIFIC REQUIREMENTS. EQUIPMENT NOT TAGGED IN PLAN WILL BE TAGGED IN ELEVATION OR RCP.

Illustration 5

ETM: Exam Room (Multi-Purpose) (EXRG3)
Floor Plan

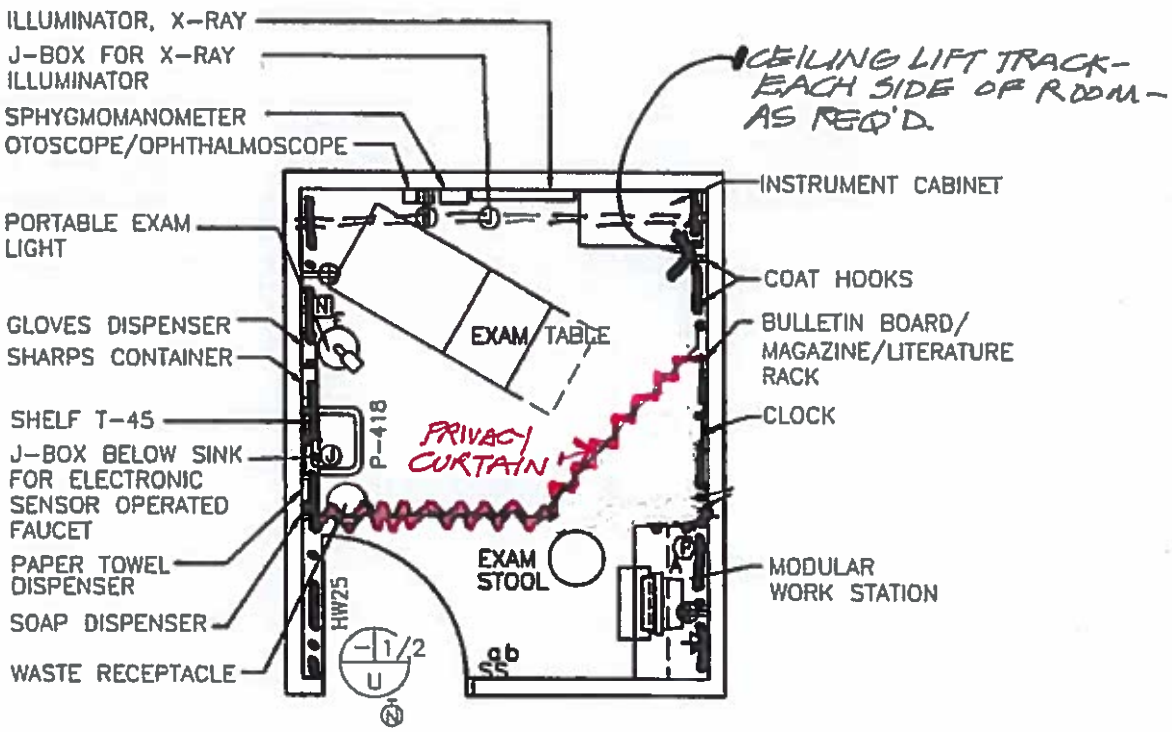

120 NSF/ 11.2 NSM

M2 1 0 1 2 4Ft

NOTE: Guide plates are graphical representations of selected room types, illustrating the integration of space, components, systems, and equipment. They provide typical configurations and general technical guidance, and are not intended to be project specific. Specific infrastructure design requirements are contained in VA Design Manuals and Space Planning Criteria located in the VA Technical Information Library.

Department of Veterans Affairs

Illustration 6

U.S. Department of Veterans Affairs

CBOC, TRPR1, PROCEDURE ROOM, GENERAL - PLAN

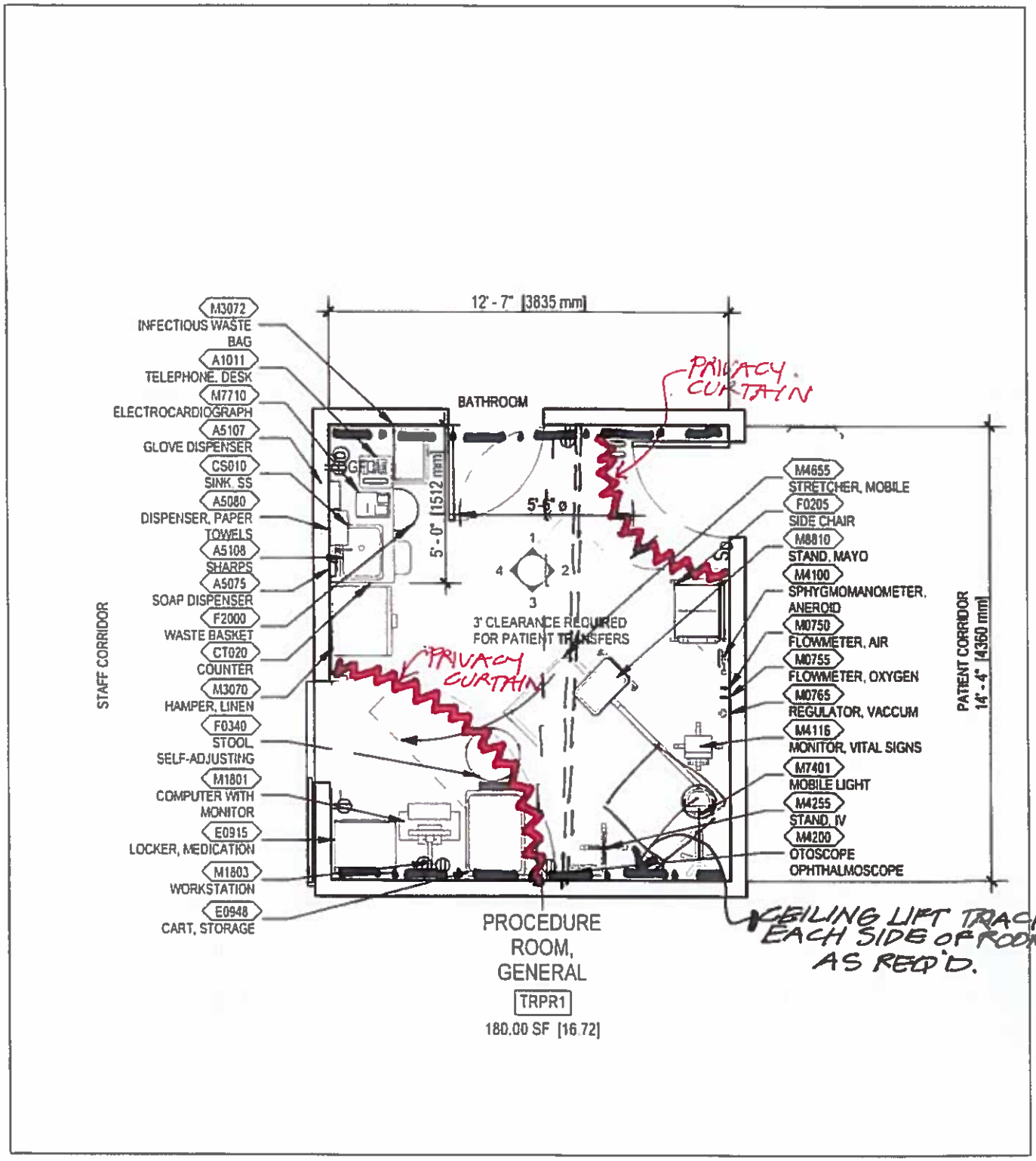

DISCLAIMER: ROOM TEMPLATES ARE GRAPHICAL REPRESENTATIONS OF SELECTED ROOM TYPES THAT ILLUSTRATE VA PLANNING REQUIREMENTS FOR SPACE, ROOM CONTENTS, AND ROOM SPECIFIC ENGINEERING SYSTEMS. THEY PROVIDE TYPICAL CONFIGURATIONS, PLANNING CRITERIA, AND GENERAL TECHNICAL GUIDANCE AND ARE NOT INTENDED TO BE PROJECT SPECIFIC REQUIREMENTS. EQUIPMENT NOT TAGGED IN PLAN WILL BE TAGGED IN ELEVATION OR RCP

Illustration 7

CBOC, EXPA1, EXAM ROOM-PATIENT ALIGNED CARE TEAM - PLAN

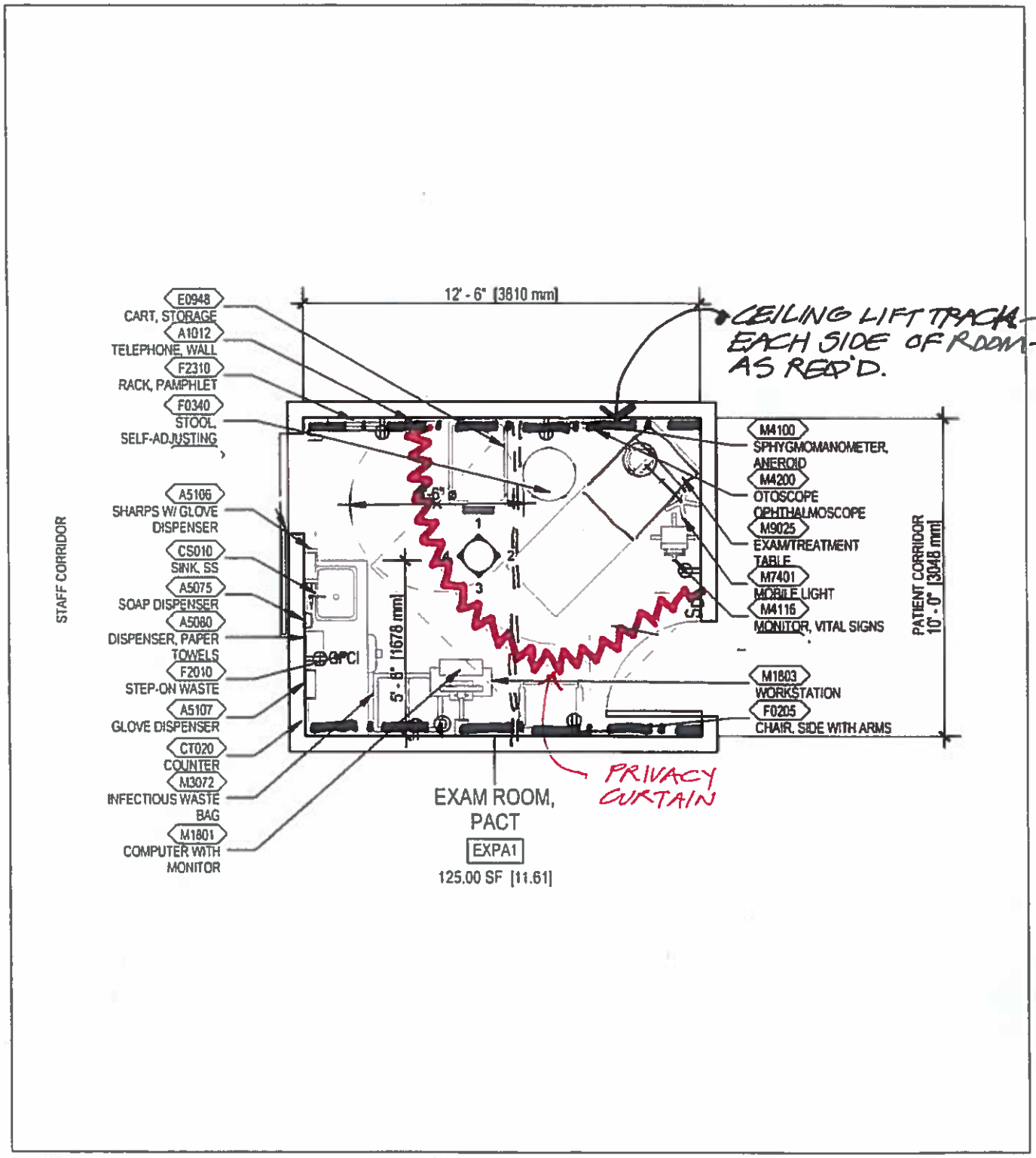

DISCLAIMER: ROOM TEMPLATES ARE GRAPHICAL REPRESENTATIONS OF SELECTED ROOM TYPES THAT ILLUSTRATE VA PLANNING REQUIREMENTS FOR SPACE, ROOM CONTENTS, AND ROOM SPECIFIC ENGINEERING SYSTEMS. THEY PROVIDE TYPICAL CONFIGURATIONS, PLANNING CRITERIA, AND GENERAL TECHNICAL GUIDANCE, AND ARE NOT INTENDED TO BE PROJECT SPECIFIC REQUIREMENTS. EQUIPMENT NOT TAGGED IN PLAN WILL BE TAGGED IN ELEVATION OR RCP.

Illustration 8

U.S. Department of Veterans Affairs

CBOC, EXW01, WOMENS HEALTH EXAM ROOM - PLAN

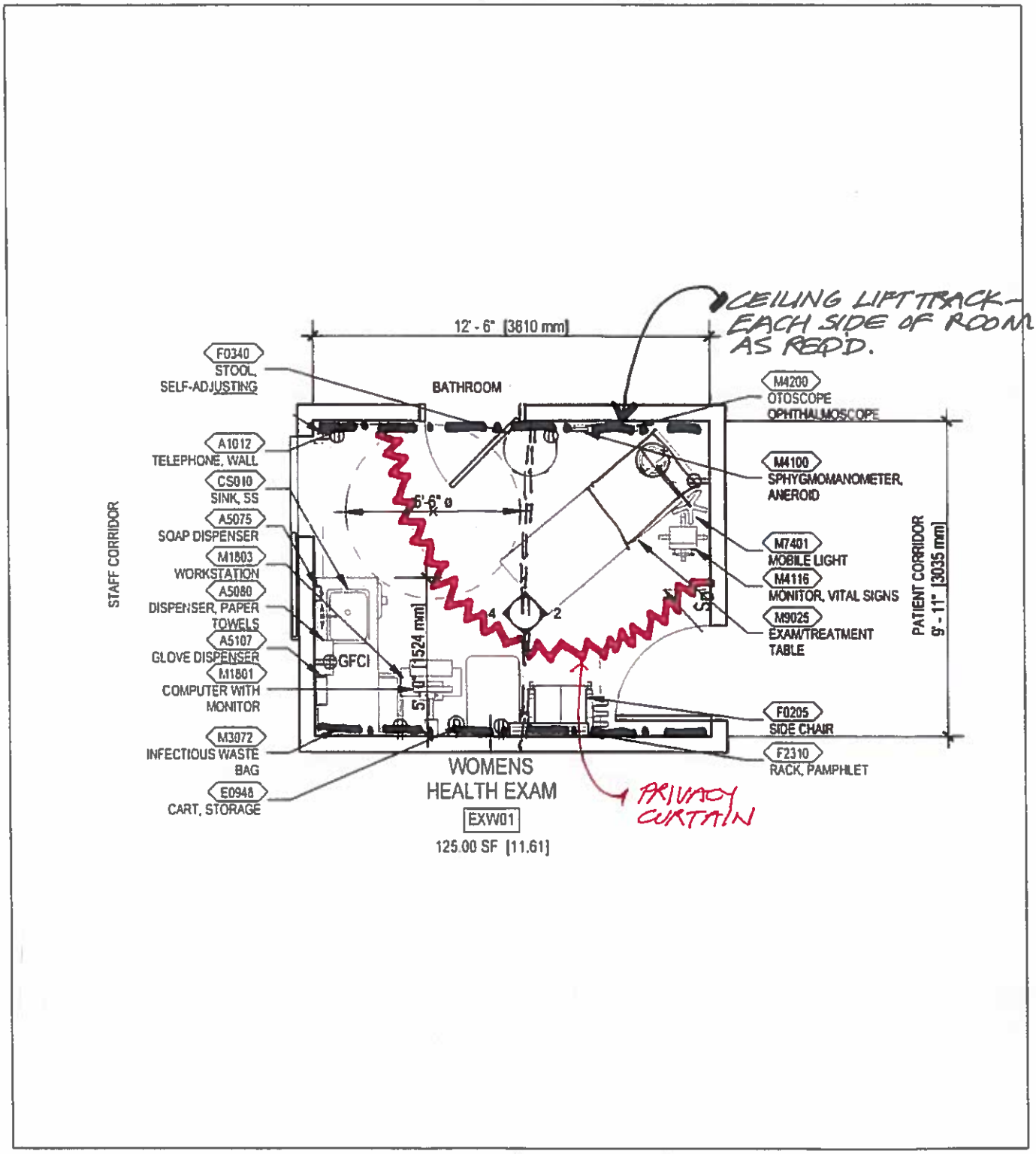

DISCLAIMER: ROOM TEMPLATES ARE GRAPHICAL REPRESENTATIONS OF SELECTED ROOM TYPES THAT ILLUSTRATE VA PLANNING REQUIREMENTS FOR SPACE, ROOM CONTENTS, AND ROOM SPECIFIC ENGINEERING SYSTEMS. THEY PROVIDE TYPICAL CONFIGURATIONS, PLANNING CRITERIA, AND GENERAL TECHNICAL GUIDANCE, AND ARE NOT INTENDED TO BE PROJECT SPECIFIC REQUIREMENTS. EQUIPMENT NOT TAGGED IN PLAN WILL BE TAGGED IN ELEVATION OR RCP

Illustration 9

ETM: Procedure Room, General Purpose (TRGM1)
Floor Plan

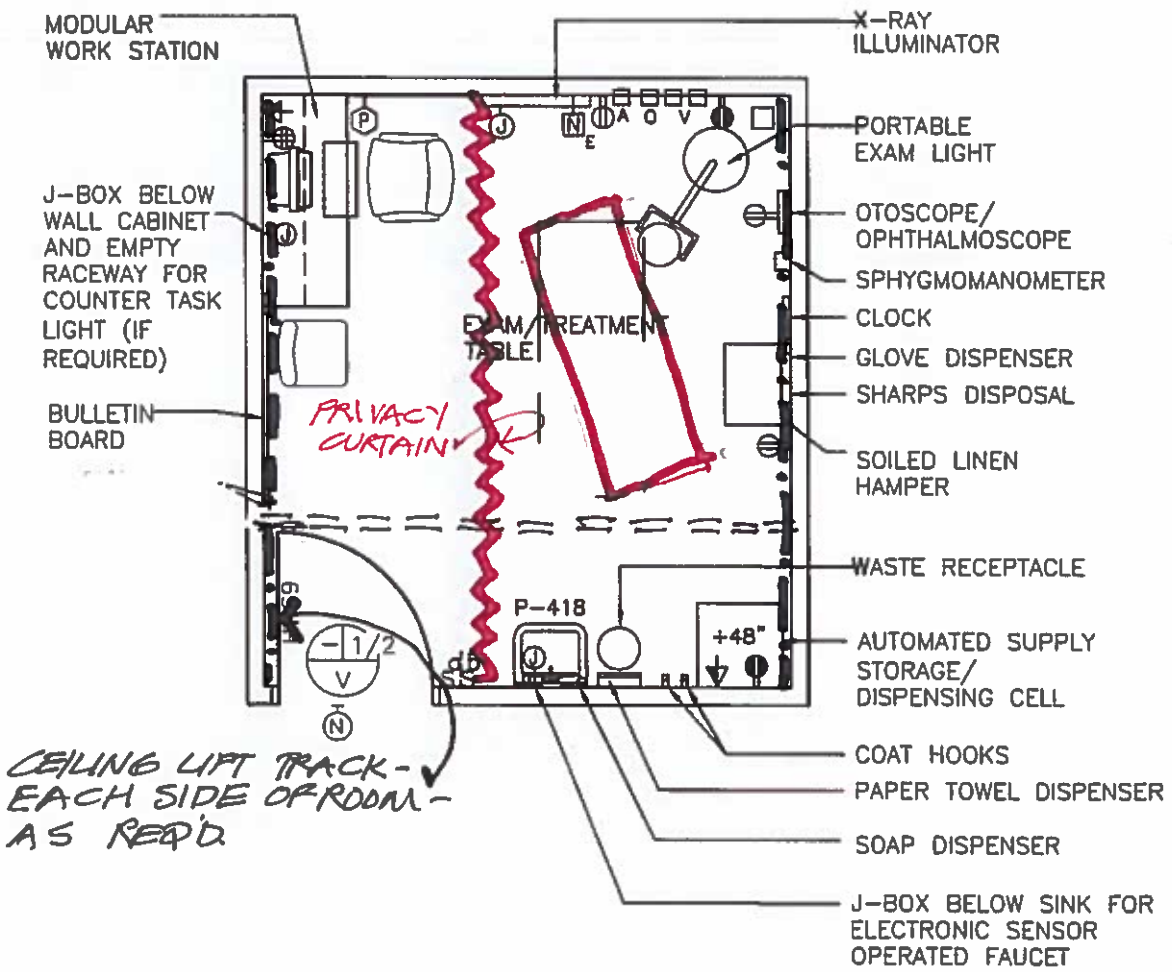

175 NSF/ 16.3 NSM

M2 1 0 1 2 4Ft

NOTE: Guide plates are graphical representations of selected room types, illustrating the integration of space, components, systems, and equipment. They provide typical configurations and general technical guidance, and are not intended to be project specific. Specific infrastructure design requirements are contained in VA Design Manuals and Space Planning Criteria located in the VA Technical Information Library.

Department of Veterans Affairs

Illustration 10

Subject: Visual Privacy in Waiting Rooms

One PACT CBOC Test and Fit Layout

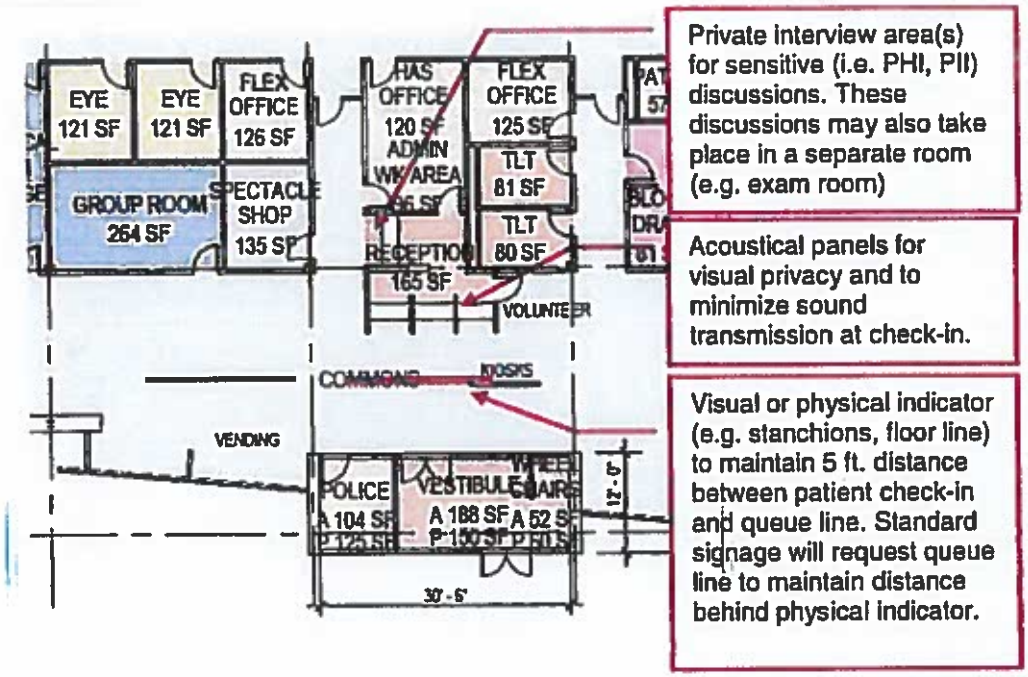

Two PACT CBOC Test and Fit Layout

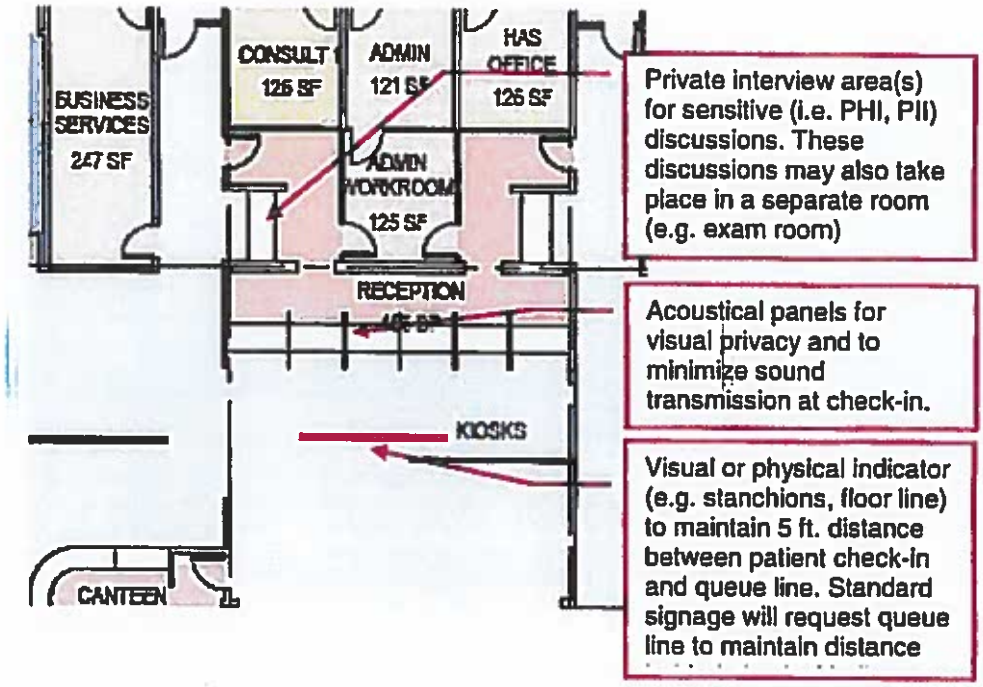

Illustration 11

DESIGN ALERT RESCISSION DATES

Design Alert Number	Issue Date	Subject	Rescission Date
003C2B-DA-146	09-01-2015	rescinded	12-05-2017
003C2B-DA-145	08-01-2015	rescinded	12-05-2017
003C2B-DA-143	06-01-2014	rescinded	09-01-2016
003C2B-DA-141	08-01-2013	rescinded	11-14-2018
003C2B-DA-140	12-01-2012	rescinded	01-01-2013
003C2B-DA-139	07-01-2012	rescinded	07-17-2012
00CFM1A-DA-136	03-08-2011	rescinded	03-17-2017
00CFM1A-DA-135	05-14-2010	rescinded	10-16-2018
00CFM1A-DA-134	05-17-2010	rescinded	12-05-2017
00CFM1A-DA-133	03-04-2010	rescinded	09-01-2016
00CFM1A-DA-131	09-17-2007	rescinded	09-01-2016
FM-181A-DA-130	01-18-2007	rescinded	11-07-2018
FM-181A-DA-129	01-18-2007	rescinded	11-07-2018
FM-181A-DA-128	04-27-2006	rescinded	09-01-2016
FM-181A-DA-127	04-25-2006	rescinded	06-01-2012
FM-181A-DA-126	04-25-2006	rescinded	06-01-2012
FM-181A-DA-125	03-24-2006	rescinded	06-01-2012
FM-181A-DA-124	02-23-2006	rescinded	04-15-2010
FM-181A-DA-123	04-05-2005	rescinded	04-15-2010
FM-181A-DA-122	10-26-2004	rescinded	04-15-2010
FM-181A-DA-120	04-13-2004	rescinded	09-01-2016
FM-181A-DA-119	03-23-2004	rescinded	04-15-2010
FM-181A-DA-118	02-19-2004	rescinded	04-15-2010
FM-181A-DA-117	05-13-2003	rescinded	10-16-2018
FM-181A-DA-116	02-15-2006	rescinded	04-15-2010
FM-181A-DA-115	09-20-2002	rescinded	04-15-2010
FM-181A-DA-114	09-15-2002	rescinded	09-01-2016
FM-181A-DA-113	08-05-2002	rescinded	12-31-2018
00CFM1A-DA-112	07-23-2002 04-19-2011	rescinded	11-08-2018
FM-181A-DA-111	06-19-2002	rescinded	09-01-2016
FM-181A-DA-110	01-16-2002	rescinded	11-07-2018
FM-181A-DA-109	05-13-2003	rescinded	10-16-2018
FM-181A-DA-108	05-16-2001	rescinded	03-31-2011

Design Alert Number	Issue Date	Subject	Rescission Date
FM-181A-DA-107	04-16-2001	rescinded	03-31-2011
FM-181A-DA-106	06-22-2000	rescinded	03-31-2011
FM-181A-DA-105	06-19-2000	rescinded	10-17-2018
FM-181A-DA-104	04-12-2000	rescinded	11-07-2018
FM-181A-DA-103	12-10-1999	rescinded	03-31-2011
FM-181A-DA-102	10-25-1999	rescinded	12-05-2017
FM-181A-DA-101	10-12-1999	rescinded	04-15-2010
FM-181A-DA-100	09-23-1999	rescinded	09-01-2016
FM-181A-DA-99	08-16-1999	rescinded	04-15-2010
FM-181A-DA-98	07-30-1999	rescinded	10-16-2018
FM-181A-DA-97	03-09-1999	rescinded	04-15-2010
FM-187C-DA-96	01-19-1999	rescinded	04-15-2010
FM-187C-DA-95	01-13-1999	rescinded	12-05-2017
FM-187C-DA-94	11-19-1998	rescinded	04-15-2010
FM-187C-DA-93	11-10-1998	rescinded	03-31-2011
FM-187C-DA-92	10-26-1998	rescinded	04-15-2010
FM-187C-DA-91	10-22-1998	rescinded	05-05-2014
FM-187C-DA-90	08-17-1998	rescinded	04-15-2010
FM-187C-DA-89	07-10-1998	rescinded	03-31-2011
FM-187C-DA-88	04-09-1998	rescinded	04-15-2010
FM-187C-DA-87	03-20-1998	rescinded	03-31-2011
FM-187C-DA-86	03-04-1998	rescinded	04-15-2010
FM-187C-DA-85	03-02-1998	rescinded	09-01-2016
FM-187C-DA-84	02-06-1998	rescinded	04-15-2010
FM-187C-DA-83	01-29-1998	rescinded	04-15-2010
FM-187C-DA-82	01-15-1998	rescinded	04-15-2010
FM-187C-DA-81	12-24-1997	rescinded	03-31-2011
FM-187C-DA-80	12-22-1997	rescinded	03-31-2011
FM-187C-DA-79	12-11-1997	rescinded	03-31-2011
FM-187C-DA-78	11-07-1997	rescinded	10-16-2018
FM-187C-DA-77	10-23-1997	rescinded	12-05-2017
FM-187C-DA-76	10-15-1997	rescinded	12-05-2017
FM-187C-DA-75	08-14-1997	rescinded	03-31-2011
FM-187C-DA-74	08-04-1997	rescinded	04-15-2010
FM-187C-DA-73	07-02-1997	rescinded	03-31-2011

Design Alert Number	Issue Date	Subject	Rescission Date
FM-187C-DA-72	05-27-1997	rescinded	04-15-2010
FM-187C-DA-71	05-23-1997	rescinded	03-31-2011
FM-187C-DA-70	04-25-1997	rescinded	04-15-2010
FM-187C-DA-69	04-23-1997	rescinded	10-16-2018
FM-187C-DA-68	04-21-1997	rescinded	10-12-2018
FM-187C-DA-67	04-14-1997	rescinded	04-15-2010
FM-187C-DA-66	03-10-1997	rescinded	04-15-2010
FM-187C-DA-65	02-20-1997	rescinded	09-01-2016
FM-187C-DA-64	02-18-1997	rescinded	04-15-2010
FM-187C-DA-63	02-18-1997	rescinded	03-31-2011
FM-187C-DA-62	01-22-1997	rescinded	04-15-2010
FM-187C-DA-61	01-14-1997	rescinded	03-31-2011
FM-187C-DA-60	09-11-1996	rescinded	04-15-2010
FM-187C-DA-59	09-10-1996	rescinded	04-15-2010
FM-187C-DA-58	08-29-1996	rescinded	04-15-2010
FM-187C-DA-57	07-23-1996	rescinded	09-01-2016
FM-187C-DA-56	07-12-1996	rescinded	12-10-2018
FM-187C-DA-55	07-11-1996	rescinded	09-01-2016
FM-187C-DA-54	07-10-1996	rescinded	10-11-2018
FM-187C-DA-53	07-09-1996	rescinded	04-15-2010
FM-187C-DA-52	04-08-1996	rescinded	04-15-2010
FM-187C-DA-51	04-02-1996	rescinded	11-14-2018
FM-187C-DA-50	03-08-1996	rescinded	04-20-2017
FM-187C-DA-49	06-03-1997	rescinded	09-15-2004
FM-187C-DA-48	02-05-1996	rescinded	10-12-2018
FM-187C-DA-47	12-06-1995	rescinded	09-01-2016
FM-087C-DA-46	11-08-1995	rescinded	10-11-2018
FM-087C-DA-45	11-07-1995	rescinded	05-26-2017
FM-187C-DA-44	10-16-1995	rescinded	10-17-2018
FM-187C-DA-43	09-20-1995	rescinded	10-11-2018
FM-187C-DA-42	09-20-1995	rescinded	03-17-2017
FM-187C-DA-41	09-06-1995	rescinded	10-12-2018
FM-187C-DA-40	08-31-1995	rescinded	10-12-2018
FM-187C-DA-39	08-17-1995	rescinded	09-01-2016
FM-187C-DA-38	06-21-1995	rescinded	04-15-2010

Design Alert Number	Issue Date	Subject	Rescission Date
FM-187C-DA-37	06-12-1995	rescinded	04-15-2010
FM-187C-DA-36	05-18-1995	rescinded	04-15-2010
FM-187C-DA-35	02-19-1998	rescinded	04-15-2010
FM-187C-DA-34	05-05-1995	rescinded	04-15-2010
00CFM1A-DA-33	05-03-1995	rescinded	09-01-2016
FM-187C-DA-32	04-13-1995	rescinded	09-01-2016
FM-187C-DA-31	03-07-1995	rescinded	10-16-2018
FM-187C-DA-30	02-27-1995	rescinded	03-31-2011
FM-187C-DA-29	01-11-1995	rescinded	04-15-2010
FM-187C-DA-28	12-22-1994	rescinded	04-15-2010
FM-187C-DA-27	12-22-1994	rescinded	04-15-2010
FM-187C-DA-26	12-01-1994	rescinded	04-15-2010
FM-187C-DA-25	12-01-1994	rescinded	04-15-2010
FM-187C-DA-24	11-30-1994	rescinded	09-01-2016
FM-187C-DA-23	11-23-1994	rescinded	04-15-2010
FM-187C-DA-22	11-21-1994	rescinded	10-16-2018
FM-187C-DA-21	11-21-1994	rescinded	09-01-2016
FM-187C-DA-20	11-18-1994	rescinded	03-31-2011
FM-187C-DA-19	11-18-1994	rescinded	04-15-2010
FM-187C-DA-18	11-09-1994	rescinded	10-12-2018
FM-187C-DA-17	11-09-1994	rescinded	10-11-2018
FM-187C-DA-16	11-07-1994	rescinded	10-11-2018
FM-187C-DA-15	11-03-1994	rescinded	10-12-2018
FM-187C-DA-14	11-03-1994	rescinded	09-01-2016
FM-187C-DA-13	11-01-1994	rescinded	10-11-2018
FM-187C-DA-12	10-31-1994	rescinded	04-15-2010
FM-187C-DA-11	10-25-1994	rescinded	10-11-2018
FM-187C-DA-10	10-25-1994	rescinded	04-15-2010
FM-187C-DA-09	10-25-1994	rescinded	10-16-2018
FM-187C-DA-08	10-03-1994	rescinded	04-15-2010
FM-187C-DA-07	07-19-1994	rescinded	03-31-2011
FM-187C-DA-06	07-11-1994	rescinded	09-01-2016
FM-187C-DA-05	07-07-1994	rescinded	04-15-2010
FM-187C-DA-04	05-11-1994	rescinded	03-31-2011
FM-187C-DA-03	04-04-1994	rescinded	04-15-2010

Design Alert Number	Issue Date	Subject	Rescission Date
FM-187C-DA-02	03-28-1994	rescinded	03-31-2011
FM-187C-DA-01	03-14-1994	rescinded	04-15-2010