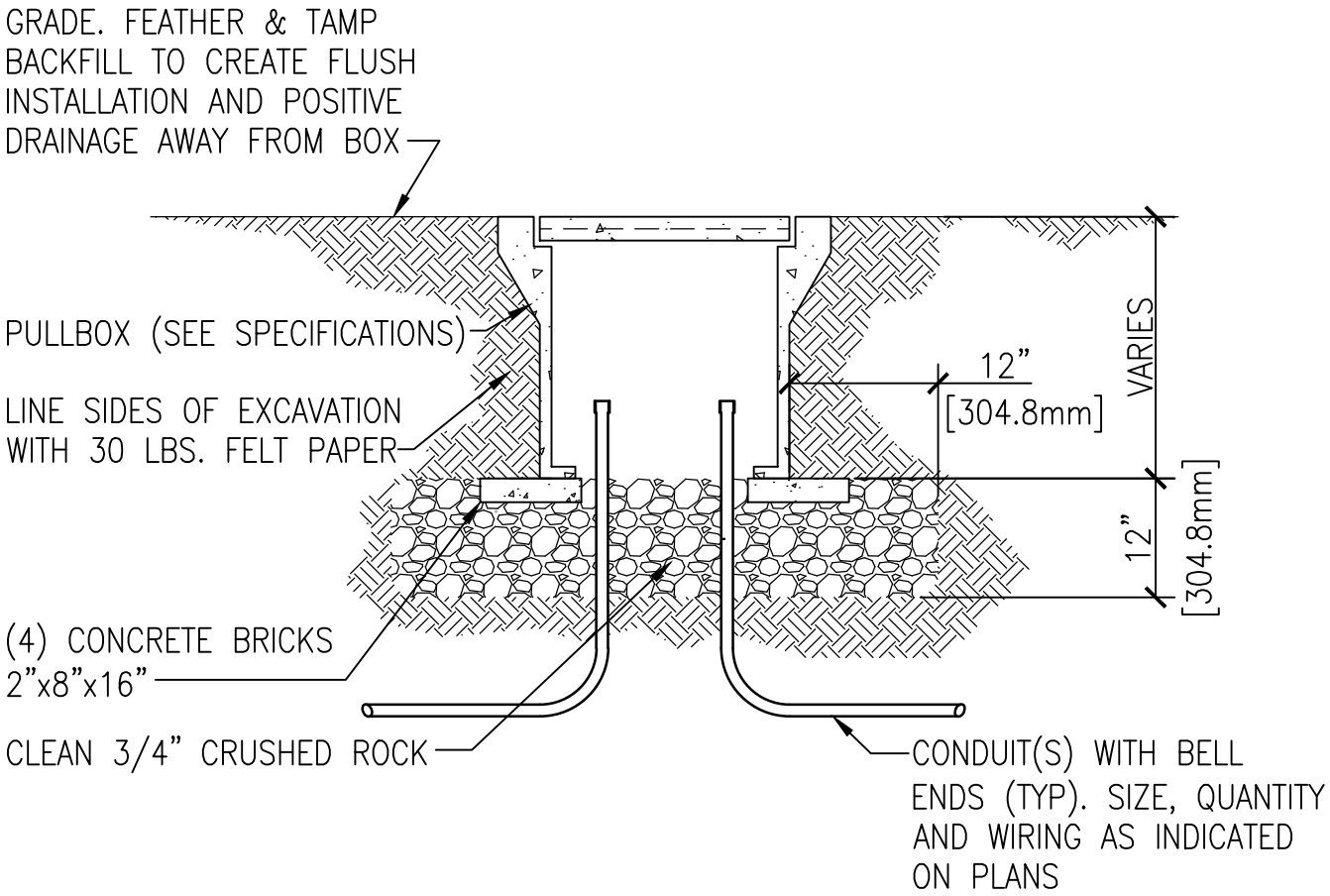

UNDERGROUND CONCRETE PULLBOX

SCALE: NONE

INSTALLATION IN TURF AREAS

Department of Veterans Affairs

DETAIL TITLE / UNDERGROUND PULLBOX

SCALE: NONE