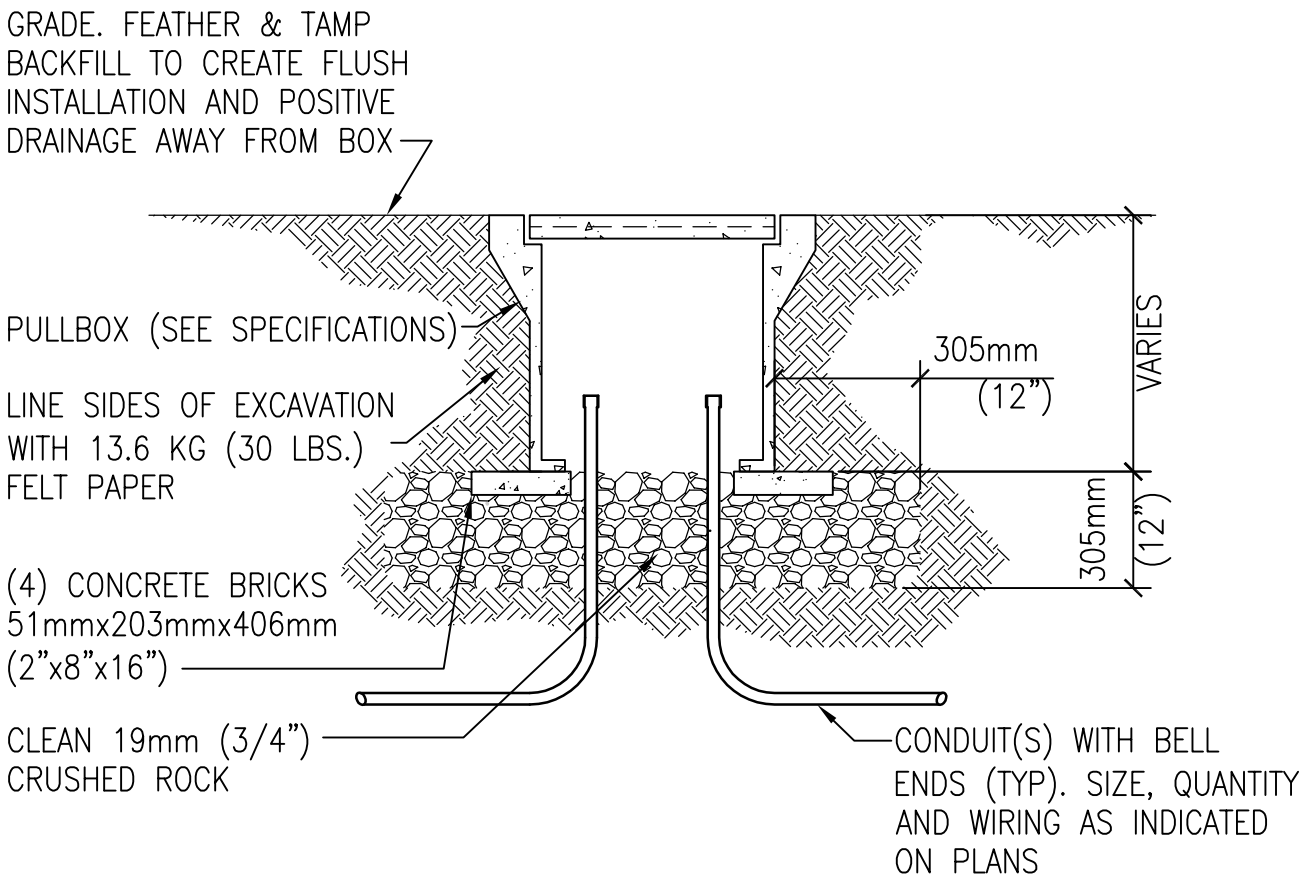

UNDERGROUND CONCRETE PULLBOX - TURF AREAS

NTS

Department of Veterans Affairs

DETAIL TITLE / UNDERGROUND CONCRETE PULLBOX - TURF AREAS

SCALE: NONE

DATE ISSUED: APRIL 2014

CAD DETAIL NO.: SD260541-04.DWG