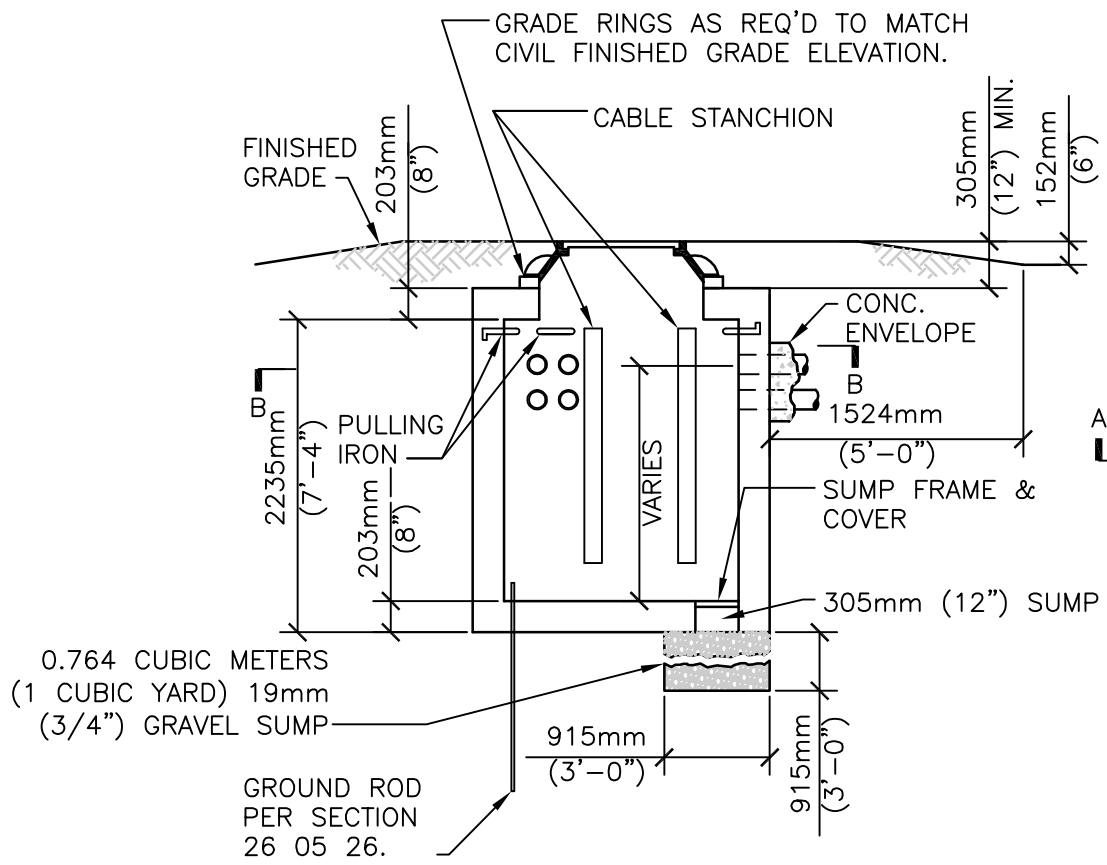

SECTION "A-A"

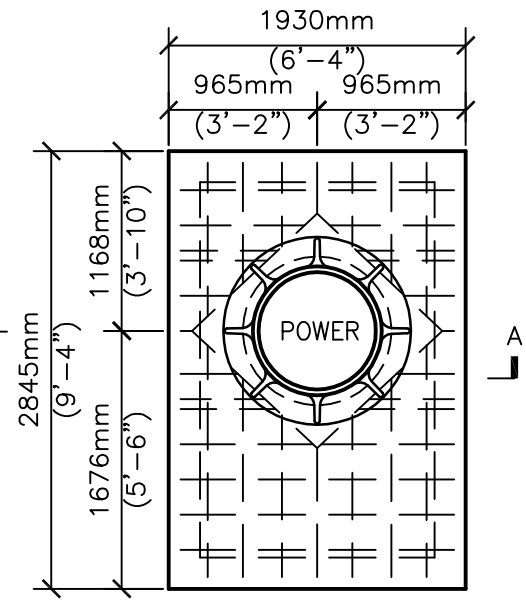

TOP VIEW

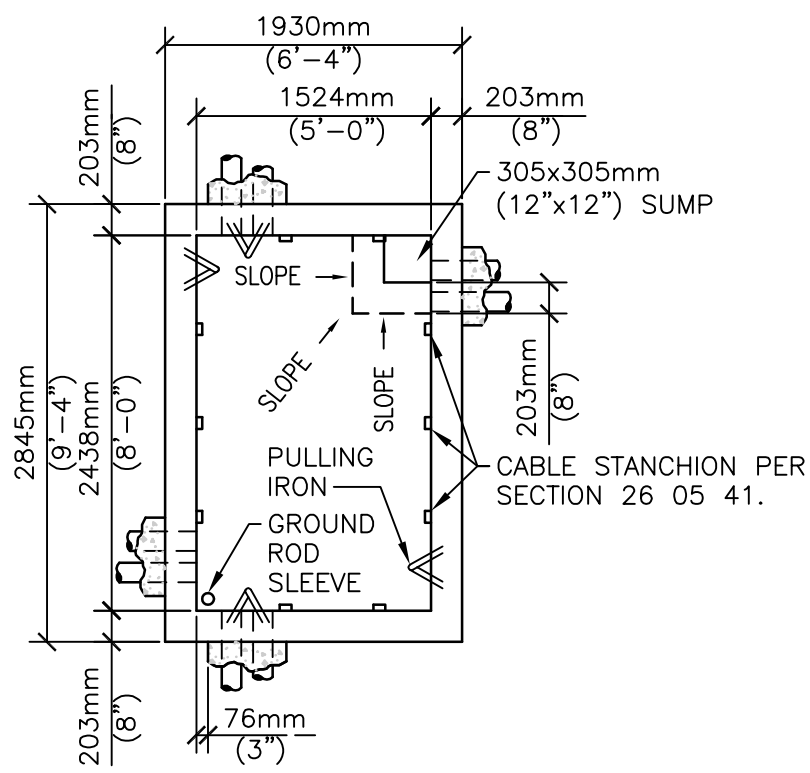

SECTION "B-B"

GENERAL NOTE:

1. INCLUDE ALUMINUM LADDER (NOT SHOWN FOR CLARITY)

POWER MANHOLE DETAILS

NTS

Department of Veterans Affairs

DETAIL TITLE / POWER MANHOLE DETAILS

SCALE :NONE

DATE ISSUED: APRIL 2014

CAD DETAIL NO.: SD260541-01.DWG