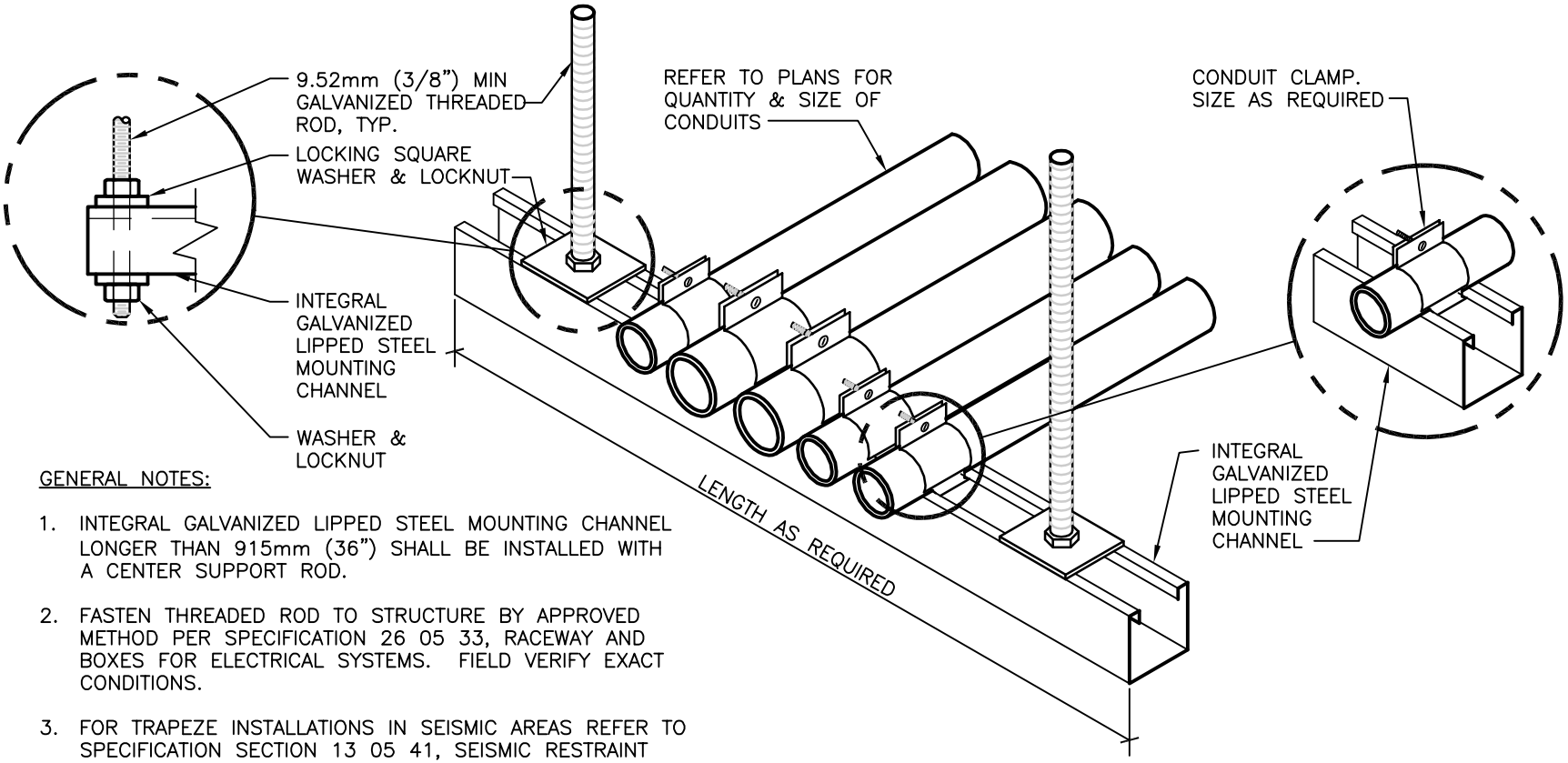

GENERAL NOTES:

1. INTEGRAL GALVANIZED LIPPED STEEL MOUNTING CHANNEL LONGER THAN 915mm (36") SHALL BE INSTALLED WITH A CENTER SUPPORT ROD.
2. FASTEN THREADED ROD TO STRUCTURE BY APPROVED METHOD PER SPECIFICATION 26 05 33, RACEWAY AND BOXES FOR ELECTRICAL SYSTEMS. FIELD VERIFY EXACT CONDITIONS.
3. FOR TRAPEZE INSTALLATIONS IN SEISMIC AREAS REFER TO SPECIFICATION SECTION 13 05 41, SEISMIC RESTRAINT REQUIREMENTS FOR NON-STRUCTURAL COMPONENTS.

CONDUIT TRAPEZE MOUNTING DETAIL

NTS

Department of Veterans Affairs

DETAIL TITLE / CONDUIT TRAPEZE MOUNTING DETAIL

SCALE :NONE

DATE ISSUED: APRIL 2014

CAD DETAIL NO.: SD260533-03.DWG