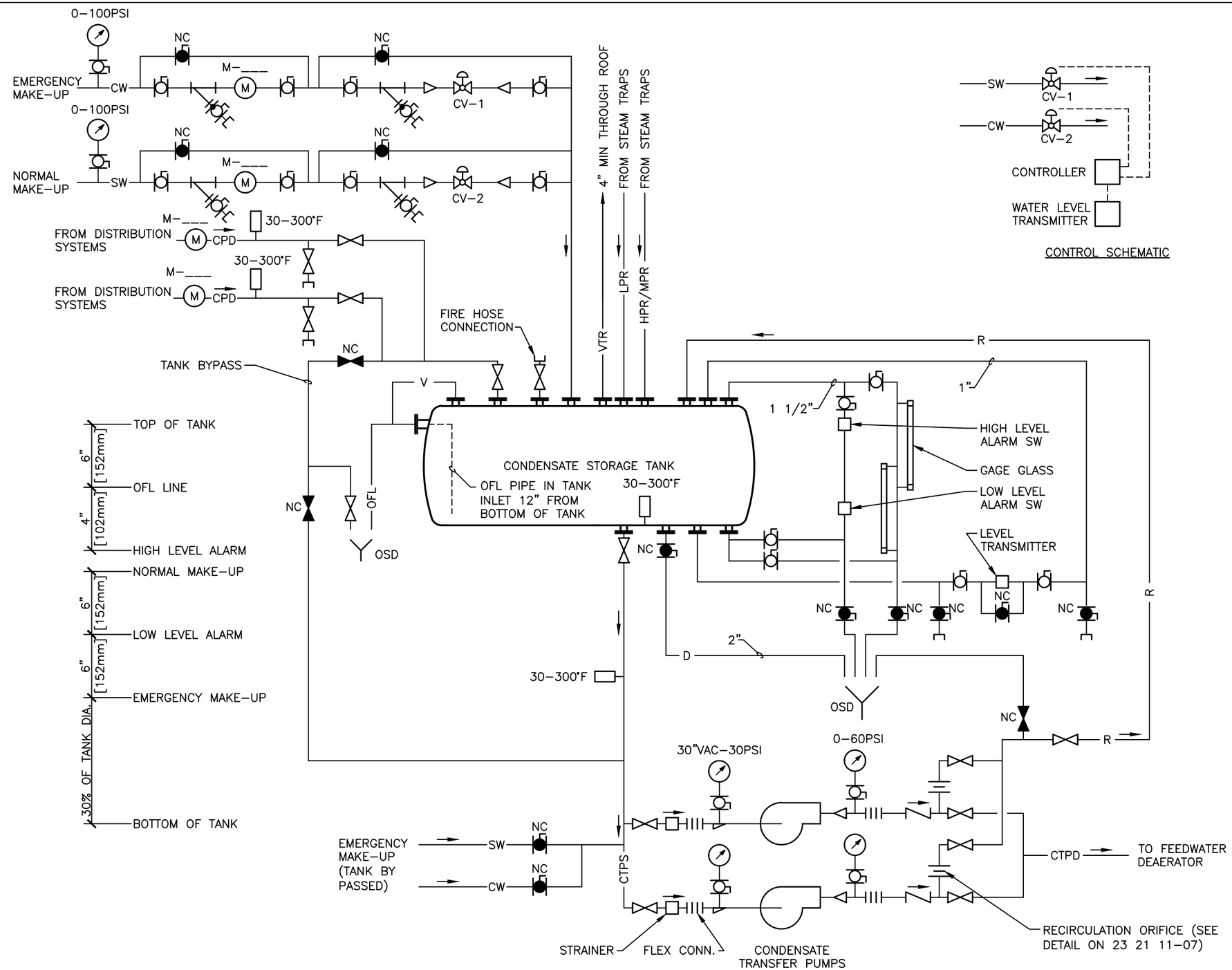

CONDENSATE STORAGE AND TRANSFER FLOW DIAGRAM

NTS

DESIGNER NOTE: SEE SD232111–04 BASIC FLOW DIAGRAM – CONDENSATE AND BOILER FEEDWATER FOR COMPLETE SYSTEM.

DETAIL TITLE / CONDENSATE STORAGE AND TRANSFER FLOW DIAGRAM

SCALE :NONE

DATE ISSUED: SEPTEMBER 2010

CAD DETAIL NO.: SD232111–05.DWG

Department of Veterans Affairs