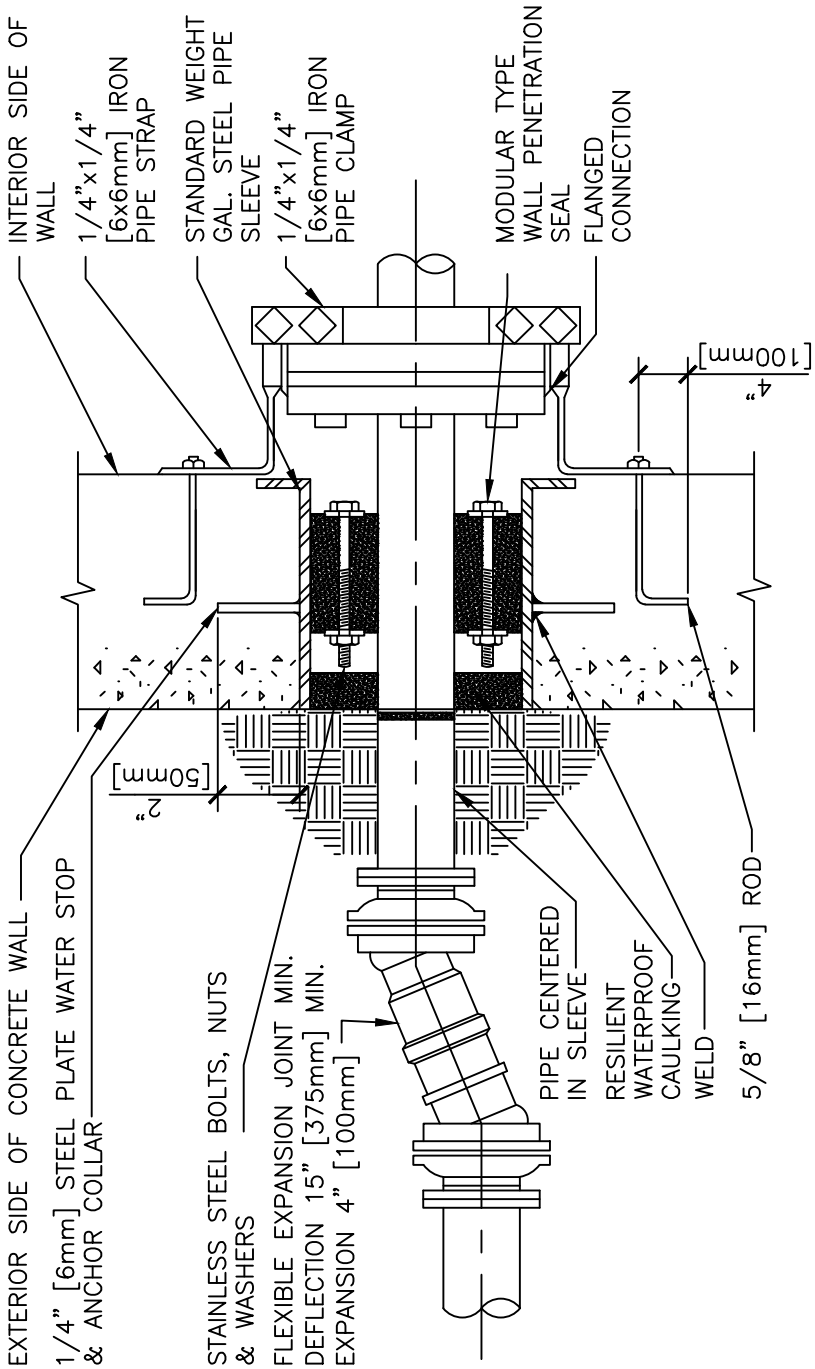

PIPE PENETRATION THROUGH WALLS BELOW GRADE

#

NTS

Department of Veterans Affairs

DETAIL TITLE / PIPE PENETRATION THROUGH WALLS BELOW GRADE

SCALE :NONE

DATE ISSUED: JULY 2014

CAD DETAIL NO.: SD220511-01.DWG