December 2010

Electrical Design Manual for

- *New Hospitals*
- *Replacement Hospitals*
- *Ambulatory Care*
- *Clinical Additions*
- *Energy Centers*
- *Outpatient Clinics*
- *Animal Research Facilities*
- *Laboratory Buildings*

Department of Veterans Affairs

Office of Construction & Facilities Management
Facilities Quality Service (00CFM1A)
811 Vermont Avenue, NW
Washington DC 20420

CONTENTS

CHAPTER 1: GENERAL REQUIREMENTS 1-1
1.1 PURPOSE 1-3
1.2 RESPONSIBILITY 1-3
1.3 AUTHORITY HAVING JURISDICTION 1-3
1.4 COORDINATION 1-3
1.5 VA DESIGN CRITERIA 1-4
1.5.1 MASTER SPECIFICATIONS (PG-18-1) 1-4
1.5.2 DESIGN AND CONSTRUCTION PROCEDURES (PG-18-3) 1-5
1.5.3 NATIONAL CAD STANDARD, VHA APPLICATION GUIDE & STANDARD DETAILS (PG-18-4) 1-5
1.5.4 EQUIPMENT REFERENCE MANUAL (PG-18-5) 1-5
1.5.5 DESIGN MANUALS (PG-18-10) 1-5
1.5.6 DESIGN GUIDES (PG-18-12) 1-6
1.5.7 DESIGN SUBMISSION REQUIREMENTS (PG-18-15) 1-6
1.5.8 ARCHITECT/ENGINEER REVIEW CHECKLIST 1-7
1.5.9 DESIGN ALERTS 1-7
1.5.10 QUALITY ALERTS 1-7
1.5.11 PHYSICAL SECURITY DESIGN MANUAL FOR VA FACILITIES - MISSION CRITICAL FACILITIES & LIFE SAFETY PROTECTED FACILITIES 1-8
1.5.12 COST ESTIMATING MANUAL 1-8
1.5.13 SUSTAINABLE DESIGN AND ENERGY REDUCTION MANUAL 1-8
1.5.14 SEISMIC DESIGN REQUIREMENTS (H-18-8) 1-9
1.5.15 FIRE PROTECTION DESIGN MANUAL 1-9
1.5.16 VA HOSPITAL BUILDING SYSTEM 1-9
1.5.17 COMPUTER AIDED FACILITIES MANAGEMENT REQUIREMENTS (CAFM) 1-9
1.6 OTHER DESIGN CRITERIA 1-10
1.6.1 ENERGY CONSERVATION 1-10
1.6.2 DOE INTERIM FINAL RULE 1-10
1.6.2.1 ASHRAE Standard 90.1 - 2004 1-10
1.6.2.2 Additional Mandated Energy Conservation Measures 1-10
1.6.3 EXECUTIVE ORDER 13423 DATED JANUARY 26, 2007 1-11
1.6.3.1 New Construction 1-11
1.6.3.2 Major Renovations 1-11
1.6.3.3 Additional Measures (MOU) 1-12
1.6.4 COMMISSIONING 1-12
1.6.5 MEASUREMENTS AND VERIFICATION 1-12
1.7 APPLICABLE CODES AND STANDARDS 1-12
1.7.1 GENERAL 1-12
1.7.2 LOCAL CODES AND CONDITIONS 1-14
1.7.3 LOCAL UTILITY 1-14
1.8 DESIGN REQUIREMENTS 1-14
1.9 CRITERIA UNIQUE TO VA 1-15
1.9.1 DRAWINGS 1-15
1.9.2 SEQUENCE OF ELECTRICAL DRAWINGS 1-16
1.9.3 ABBREVIATIONS AND SYMBOLS 1-16
1.9.4 PROPRIETARY ITEMS 1-16
1.10 CALCULATIONS 1-16
1.10.1 GENERAL 1-16

1.10.2 FAULT CURRENT CALCULATIONS 1-17
1.10.3 PROTECTIVE DEVICE COORDINATION CALCULATIONS 1-17
1.10.4 ARC FLASH CALCULATIONS 1-17
1.10.5 LOAD CALCULATIONS 1-18
1.10.6 GENERATOR SIZING CALCULATIONS 1-18
1.10.7 VOLTAGE DROP CALCULATIONS 1-18
1.10.8 HARMONIC DISTORTION CALCULATIONS 1-18
1.10.9 LIGHTNING PROTECTION CALCULATIONS 1-18
1.10.10 LIGHTING CALCULATIONS 1-18
1.11 SEISMIC BRACING 1-18
1.11.1 REFERENCES 1-18
1.11.2 DRAWINGS 1-19
1.11.3 EQUIPMENT BRACING 1-19
1.12 TRANSPORT SYSTEMS 1-19
1.13 FIRE ALARM SYSTEMS 1-19
1.14 RENOVATION TO EXISTING SITES AND BUILDINGS 1-19
1.14.1 DRAWINGS 1-19
1.14.2 MODIFICATION VERSUS REPLACEMENT 1-19
1.14.3 AGE AND PHYSICAL CONDITION 1-20
1.14.4 PARTS AVAILABILITY 1-20
1.14.5 CONDUIT AND BOXES 1-20
1.14.6 CONDUCTORS 1-20
1.14.7 WIRING DEVICES 1-21
1.14.8 LIGHTING FIXTURES 1-21
1.14.9 PANELBOARDS 1-21
1.14.10 GOVERNMENT RETAINED EQUIPMENT 1-21
1.14.11 CONTINUITY OF SERVICE 1-22
1.14.12 COMPATIBILITY 1-22

CHAPTER 2: RACEWAYS, WIRING, AND EQUIPMENT 2-1
2.1 RACEWAYS 2-3
2.1.1 CONCEALED AND EXPOSED 2-3
2.1.2 UNDERGROUND DUCTS AND CONDUITS 2-3
2.1.3 SPARE CONDUITS 2-3
2.1.4 UNDERFLOOR DUCT SYSTEMS 2-3
2.1.5 RADIOLOGY ROOMS 2-4
2.1.6 POKE-THRUS/POWER POLES 2-4
2.1.7 ETHYLENE OXIDE STERILIZATION AREA 2-4
2.2 GROUNDING 2-5
2.2.1 GROUNDING ELECTRODES 2-5
2.2.2 EQUIPMENT GROUNDING CONDUCTORS 2-5
2.2.3 METAL CURTAIN WALL GROUNDING 2-5
2.3 LIGHTNING PROTECTION SYSTEM 2-5
2.4 MOTOR DISCONNECT SWITCHES 2-6

CHAPTER 3: RECEPTACLE AND POWER REQUIREMENTS 3-1
3.1 GENERAL 3-3
3.2 ESSENTIAL ELECTRICAL SYSTEM CIRCUITS 3-3
3.3 RECEPTACLE CIRCUITS 3-3
3.4 SPECIFIC APPLICATIONS 3-3
3.4.1 GROUND FAULT CIRCUIT INTERRUPTER RECEPTACLES 3-3
3.4.2 HUMAN SURGERY ROOMS 3-3

3.4.3 ICU-CCU FOOT-WALL RECEPTACLES 3-3
3.4.4 EXTERIOR ELECTRICAL RECEPTACLES....3-4
3.4.5 WAITING, LOUNGE AND LOBBY AREAS 3-4
3.4.6 ANIMAL SURGERY ROOMS (RESEARCH) 3-4
3.4.7 SELF-ILLUMINATED EMERGENCY RECEPTACLES 3-4
3.4.8 SPECIAL PROCEDURES ROOM – ISOLATED POWER 3-4
3.4.9 CORRIDORS....3-5
3.4.10 KITCHENS 3-5
3.4.11 OFFICES AND ADMINISTRATIVE AREAS 3-5
3.4.12 LABORATORIES AND RESEARCH FACILITIES....3-5
3.4.13 PHYSICAL MEDICINE AND REHABILITATION SERVICE 3-5
3.4.14 PSYCHIATRIC PATIENT ROOMS....3-6
3.4.15 STAIRWELLS....3-6
3.4.16 INTERSTITIAL SPACES 3-6
3.4.17 TV/CCTV POWER RECEPTACLES 3-6
3.4.18 ELECTRICAL CLOSETS....3-6
3.4.19 TELECOMMUNICATIONS ROOMS 3-6
3.4.20 MOTORIZED TREADMILLS 3-6

CHAPTER 4: ESSENTIAL AND STANDBY ELECTRICAL POWER SYSTEMS....4-1
4.1 GENERAL 4-3
4.2 MIXED ESSENTIAL AND STANDBY ELECTRICAL POWER SYSTEMS....4-3
4.3 COMMISSIONING....4-3
4.4 EQUIPMENT AND RATINGS....4-3
4.4.1 GENERATORS 4-3
4.4.2 AUTOMATIC TRANSFER SWITCHES (ATS)....4-3
4.4.3 CONTROL NETWORK....4-3
4.4.4 DIESEL FUEL STORAGE 4-4
4.4.5 LOCATION 4-4
4.5 EXISTING FACILITIES....4-4
4.6 ESSENTIAL ELECTRICAL SYSTEMS FOR HOSPITALS....4-4
4.6.1 ENFORCING CODES 4-4
4.6.1.1 Life Safety Branch 4-4
4.6.1.2 Critical Branch 4-5
4.6.2 EQUIPMENT BRANCH 4-6
4.6.2.1 Equipment Branch Non-Delayed Automatic Connection....4-6
4.6.2.2 Equipment Branch Delayed-Automatic Connection 4-6
4.6.3 ALTERNATE SOURCE OF POWER 4-8
4.7 ESSENTIAL ELECTRICAL SYSTEM FOR NURSING HOMES AND LIMITED CARE FACILITIES 4-8
4.7.1 LIFE SAFETY BRANCH....4-8
4.7.2 CRITICAL BRANCH 4-8
4.7.3 ALTERNATE SOURCE OF POWER 4-9
4.8 ESSENTIAL ELECTRICAL SYSTEM FOR OTHER HEALTHCARE FACILITIES 4-9
4.8.1 TYPE 3 LOADS 4-9
4.8.2 ALTERNATE SOURCE OF POWER 4-9
4.9 ESSENTIAL ELECTRICAL SYSTEM FOR OTHER FACILITIES 4-9
4.9.1 BOILER PLANT AND ENERGY CENTER 4-9
4.9.2 FIRE STATION....4-9
4.10 STANDBY ELECTRICAL SYSTEM FOR MISSION CRITICAL FACILITIES 4-10

4.10.1 REQUIREMENTS....4-10
4.10.2 STANDBY SOURCE OF POWER....4-10
CHAPTER 5: ELECTRICAL POWER DISTRIBUTION....5-1
5.1 UTILITY SERVICE....5-3
5.2 PRIMARY DISTRIBUTION....5-3
5.2.1 GENERAL....5-3
5.2.2 PRIMARY SWITCHGEAR....5-3
5.2.3 PRIMARY CABLING....5-4
5.2.4 BUILDING PRIMARY-VOLTAGE DISCONNECTING MEANS....5-4
5.3 SECONDARY DISTRIBUTION....5-4
5.3.1 GENERAL....5-4
5.3.2 MEDIUM-TO-LOW VOLTAGE TRANSFORMERS....5-4
5.3.3 LOW VOLTAGE TRANSFORMERS....5-4
5.3.4 SWITCHBOARDS, SWITCHGEAR, AND MOTOR CONTROL CENTERS....5-4
5.3.5 PANELBOARDS....5-5
5.3.6 TRANSIENT VOLTAGE SURGE SUPPRESSION (TVSS)....5-5
5.3.7 LOADS FED FROM UNINTERRUPTIBLE POWER SUPPLY (UPS)....5-5
5.4 POWER MONITORING AND METERING....5-5
5.4.1 GENERAL....5-5
5.4.2 ENERGY CENTERS....5-6
5.4.3 EXISTING FACILITIES....5-6
5.5 ELECTRICAL ROOMS AND CLOSETS....5-6
5.5.1 GENERAL....5-6
5.5.2 SPACE FOR FUTURE EQUIPMENT....5-7
5.6 ELECTRICAL FACILITIES FOR OPERATING ROOMS....5-7
5.7 ELECTRICAL FACILITIES FOR ELEVATORS....5-7
CHAPTER 6: LIGHTING....6-1
6.1 GENERAL....6-3
6.2 STANDARDS....6-3
6.3 LIGHTING CALCULATIONS....6-3
6.4 LIGHTING FIXTURE SCHEDULE....6-3
6.5 DESIGN APPROACH....6-3
6.5.1 DEVIATIONS....6-3
6.5.2 LIGHTING SCHEMES....6-4
6.6 LIGHT SOURCES....6-4
6.6.1 STANDARDIZATION OF SOURCES....6-4
6.6.2 FLUORESCENT....6-4
6.6.3 METAL HALIDE....6-4
6.6.4 LED....6-4
6.7 BALLASTS....6-4
6.8 FIXTURES....6-5
6.9 CONTROL....6-5
6.9.1 GENERAL....6-5
6.9.2 INTERIOR LIGHTING CONTROL....6-5
6.9.3 EXTERIOR LIGHTING CONTROL....6-6
6.10 INTERIOR LIGHTING....6-6
6.10.1 GENERAL....6-6
6.10.2 SPECIFIC APPLICATIONS....6-6
6.10.3 BED ROOM LIGHTING....6-7
6.10.3.1 General Lighting....6-7

6.10.3.2 Bed Lights....6-7
6.10.3.3 Vestibule Lighting....6-8
6.10.3.4 Service Alcove....6-8
6.10.3.5 Bed Room Lavatory....6-8
6.10.3.6 Night Light....6-8
6.10.3.7 Toilet/Bathroom....6-8
6.10.3.8 Closets Or Lockers....6-8
6.10.4 CORRIDOR LIGHTING IN NURSING HOMES AND GERIATRIC AREAS (NOT DOMICILIARY)....6-9
6.10.5 EYE EXAMINATION ROOMS....6-9
6.10.6 HEMODIALYSIS EXAM....6-9
6.10.7 INTERSTITIAL SPACES....6-9
6.11 KITCHEN HOOD....6-10
6.11.1 POOL LIGHTING....6-10
6.11.2 ANIMAL WARD....6-10
6.11.3 PARKING GARAGES....6-10
6.11.4 ELEVATOR HOISTWAYS....6-11
6.12 EXTERIOR LIGHTING....6-11
6.12.1 GENERAL....6-11
6.12.2 EXISTING SITES....6-11
6.12.3 OBSTRUCTION LIGHTING....6-11
6.12.4 PARKING LOTS....6-11

CHAPTER 7: TELECOMMUNICATIONS SYSTEMS....7-1
7.1 GENERAL....7-3
7.2 GENERAL REQUIREMENTS....7-3
7.2.1 TELECOMMUNICATIONS INFRASTRUCTURE PLANT (TIP)....7-3
7.2.2 TIP FUNCTIONAL REQUIREMENTS....7-4
7.3 CONDUITS AND BOXES....7-4
7.3.1 GENERAL....7-4
7.3.2 MINIMUM SIZE....7-4
7.3.3 INTERCONNECTING CONDUIT REQUIREMENTS....7-4
7.3.4 HORIZONTAL CONDUITS....7-6
7.3.5 PARTITIONED CABLE TRAYS AND OPEN WIREWAYS....7-6
7.3.6 TELECOMMUNICATIONS CABLE DUCTS UNDER CELLULAR FLOORS....7-7
7.3.7 VERTICAL RISERS....7-7
7.4 TELECOMMUNICATIONS OUTLETS....7-7
7.5 DRAWINGS....7-8
7.6 WIRES AND CABLES....7-9
7.7 SPECIAL SYSTEMS SPECIFIC REQUIREMENTS....7-9
7.7.1 GENERAL....7-9
7.7.2 NURSE CALL....7-9
7.7.3 PUBLIC ADDRESS (PA)....7-10
7.7.4 INTERCOMMUNICATION (IC)....7-10
7.7.5 MASTER ANTENNA TELEVISION (MATV)....7-10
7.7.6 MOTION INTRUSION DETECTION (MID)....7-11
7.7.7 CLOSED CIRCUIT TELEVISION (CCTV)....7-11
7.7.8 ELECTRONIC ACCESS AND DOOR CONTROL (EADR)....7-11
7.7.9 RADIO PAGING SYSTEM (RPS)....7-11
7.7.10 PATIENT/STAFF ANNUNCIATOR/LOCATOR SYSTEM (PAL)....7-11
7.7.11 TWO-WAY RADIO SYSTEM (TRS)....7-12

7.7.12 DURESS ALARM AND EMERGENCY NOTIFICATION SYSTEM (ENS) 7-12
7.7.13 SECURITY MANAGEMENT AND CONTROL, AND CENTRALIZED POLICE SECURITY MANAGEMENT SYSTEMS (SMS) 7-12
7.7.14 PATIENT ANNUNCIATOR/LOCATOR SYSTEM (PAS) 7-12

CHAPTER 8: INFORMATION TECHNOLOGY ROOMS REQUIREMENTS 8-1
8.1 GENERAL 8-3
8.2 ROOM TYPES AND DEFINITIONS 8-3
8.2.1 GENERAL 8-3
8.2.2 ANTENNA HEADEND EQUIPMENT ROOM (OPTIONAL).....8-3
8.2.3 DEMARC ROOM.....8-3
8.2.4 TELEPHONE OPERATORS ROOM (TOR) 8-3
8.2.5 MAIN COMPUTER ROOM (MCR) 8-3
8.2.6 TELECOMMUNICATIONS ROOM (TR).....8-3
8.2.7 POLICE, ENGINEERING, AND EMERGENCY MANAGEMENT CONTROL ROOMS, AND OTHER DESIGNATED ROOMS.....8-4
8.3 GENERAL ELECTRICAL REQUIREMENTS 8-4
8.3.1 GENERAL 8-4
8.3.2 POWER.....8-4
8.3.3 LIGHTING.....8-4
8.3.4 GROUNDING 8-4
8.3.5 SECURITY 8-5
8.3.6 CABLE AND WIRE PATHWAYS.....8-5
8.4 ANTENNA HEADEND EQUIPMENT ROOM (OPTIONAL).....8-5
8.4.1 GENERAL 8-5
8.4.2 LOCATION 8-5
8.4.3 CONFIGURATION 8-6
8.4.4 ROOM ENVELOPE.....8-6
8.4.5 TIP WIRE/CABLE INTERFACE AREA.....8-6
8.4.6 HEATING, VENTILATION, AND AIR CONDITIONING.....8-7
8.4.7 FIRE PROTECTION.....8-7
8.4.8 POWER.....8-7
8.4.9 LIGHTING.....8-7
8.4.10 GROUNDING 8-7
8.4.11 SECURITY 8-7
8.4.12 WIRE MANAGEMENT 8-7
8.5 DEMARC ROOM.....8-8
8.5.1 REQUIREMENTS.....8-8
8.6 TELEPHONE OPERATORS ROOM (TOR) 8-8
8.6.1 POWER.....8-8
8.6.2 LIGHTING.....8-8
8.7 MAIN COMPUTER ROOM (MCR) 8-8
8.7.1 POWER.....8-8
8.7.2 LIGHTING.....8-9
8.7.3 GROUNDING 8-9
8.7.4 SECURITY 8-9
8.7.5 WIRE MANAGEMENT 8-10
8.8 TELECOMMUNICATIONS ROOM (TR).....8-10
8.8.1 POWER.....8-10
8.8.2 LIGHTING.....8-10
8.8.3 GROUNDING 8-10

8.8.4 SECURITY 8-10
8.8.5 WIRE MANAGEMENT 8-10
CHAPTER 9: SPECIAL MEDICAL AND ALARM SYSTEMS....9-1
9.1 GENERAL 9-3
9.2 PATIENT WALL SYSTEMS 9-3
9.3 PREFABRICATED BEDSIDE PATIENT UNIT (PBPU)....9-3
9.3.1 PBPU INSTALLATION 9-3
9.3.2 PBPU APPLICATION....9-3
9.4 MEDICAL GAS, VACUUM, AND AIR ALARM SYSTEMS 9-4
APPENDIX A: ILLUMINATION LEVELS.... A-1
APPENDIX B: DRAWINGS.... B-1
I INDEX I-1

This page intentionally left blank.

CHAPTER 1: GENERAL REQUIREMENTS

1.1 PURPOSE 1-3
1.2 RESPONSIBILITY 1-3
1.3 AUTHORITY HAVING JURISDICTION 1-3
1.4 COORDINATION 1-3
1.5 VA DESIGN CRITERIA 1-4
1.5.1 MASTER SPECIFICATIONS (PG-18-1) 1-4
1.5.2 DESIGN AND CONSTRUCTION PROCEDURES (PG-18-3) 1-5
1.5.3 NATIONAL CAD STANDARD, VHA APPLICATION GUIDE & STANDARD DETAILS (PG-18-4) 1-5
1.5.4 EQUIPMENT REFERENCE MANUAL (PG-18-5) 1-5
1.5.5 DESIGN MANUALS (PG-18-10) 1-5
1.5.6 DESIGN GUIDES (PG-18-12) 1-6
1.5.7 DESIGN SUBMISSION REQUIREMENTS (PG-18-15) 1-6
1.5.8 ARCHITECT/ENGINEER REVIEW CHECKLIST 1-7
1.5.9 DESIGN ALERTS 1-7
1.5.10 QUALITY ALERTS 1-7
1.5.11 PHYSICAL SECURITY DESIGN MANUAL FOR VA FACILITIES - MISSION CRITICAL FACILITIES & LIFE SAFETY PROTECTED FACILITIES 1-8
1.5.12 COST ESTIMATING MANUAL 1-8
1.5.13 SUSTAINABLE DESIGN AND ENERGY REDUCTION MANUAL 1-8
1.5.14 SEISMIC DESIGN REQUIREMENTS (H-18-8) 1-9
1.5.15 FIRE PROTECTION DESIGN MANUAL 1-9
1.5.16 VA HOSPITAL BUILDING SYSTEM 1-9
1.5.17 COMPUTER AIDED FACILITIES MANAGEMENT REQUIREMENTS (CAFM) 1-9
1.6 OTHER DESIGN CRITERIA 1-10
1.6.1 ENERGY CONSERVATION 1-10
1.6.2 DOE INTERIM FINAL RULE 1-10
1.6.2.1 ASHRAE Standard 90.1 - 2004 1-10
1.6.2.2 Additional Mandated Energy Conservation Measures 1-10
1.6.3 EXECUTIVE ORDER 13423 DATED JANUARY 26, 2007 1-11
1.6.3.1 New Construction 1-11
1.6.3.2 Major Renovations 1-11
1.6.3.3 Additional Measures (MOU) 1-12
1.6.4 COMMISSIONING 1-12
1.6.5 MEASUREMENTS AND VERIFICATION 1-12
1.7 APPLICABLE CODES AND STANDARDS 1-12
1.7.1 GENERAL 1-12
1.7.2 LOCAL CODES AND CONDITIONS 1-14
1.7.3 LOCAL UTILITY 1-14
1.8 DESIGN REQUIREMENTS 1-14
1.9 CRITERIA UNIQUE TO VA 1-15
1.9.1 DRAWINGS 1-15
1.9.2 SEQUENCE OF ELECTRICAL DRAWINGS 1-16
1.9.3 ABBREVIATIONS AND SYMBOLS 1-16
1.9.4 PROPRIETARY ITEMS 1-16
1.10 CALCULATIONS 1-16
1.10.1 GENERAL 1-16
1.10.2 FAULT CURRENT CALCULATIONS 1-17
1.10.3 PROTECTIVE DEVICE COORDINATION CALCULATIONS 1-17

1.10.4 ARC FLASH CALCULATIONS 1-17
1.10.5 LOAD CALCULATIONS 1-18
1.10.6 GENERATOR SIZING CALCULATIONS 1-18
1.10.7 VOLTAGE DROP CALCULATIONS 1-18
1.10.8 HARMONIC DISTORTION CALCULATIONS 1-18
1.10.9 LIGHTNING PROTECTION CALCULATIONS 1-18
1.10.10 LIGHTING CALCULATIONS 1-18
1.11 SEISMIC BRACING 1-18
1.11.1 REFERENCES 1-18
1.11.2 DRAWINGS 1-19
1.11.3 EQUIPMENT BRACING 1-19
1.12 TRANSPORT SYSTEMS 1-19
1.13 FIRE ALARM SYSTEMS 1-19
1.14 RENOVATION TO EXISTING SITES AND BUILDINGS 1-19
1.14.1 DRAWINGS 1-19
1.14.2 MODIFICATION VERSUS REPLACEMENT 1-19
1.14.3 AGE AND PHYSICAL CONDITION 1-20
1.14.4 PARTS AVAILABILITY 1-20
1.14.5 CONDUIT AND BOXES 1-20
1.14.6 CONDUCTORS 1-20
1.14.7 WIRING DEVICES 1-21
1.14.8 LIGHTING FIXTURES 1-21
1.14.9 PANELBOARDS 1-21
1.14.10 GOVERNMENT RETAINED EQUIPMENT 1-21
1.14.11 CONTINUITY OF SERVICE 1-22
1.14.12 COMPATIBILITY 1-22

1.1 PURPOSE

This manual is a guide for electrical and telecommunications engineers and designers (hereafter referred as A/E) for the planning and design of the electrical power distribution, lighting, signal, telecommunications, and related systems (hereinafter referred to as systems) at Department of Veterans Affairs (VA) facilities.

It is expected that systems designed with the use of this manual shall meet their primary objective of providing a safe, reliable, and energy efficient installation. In order to provide the latitude needed for new technologies and concepts, technical deviations from the stipulations of this manual may be made only if a safe, reliable, and energy-efficient design shall result. Such deviations must be approved by VA. Deviations are not permitted from those requirements included in public laws, federal regulations, executive orders, and all applicable codes.

1.2 RESPONSIBILITY

The A/E shall provide all necessary professional services to perform planning and design of the systems for the project. The A/E is responsible and liable for the professional design in accordance with the contract, good engineering practices, VA standards, VA project-specific requirements (if any), and applicable codes.

1.3 AUTHORITY HAVING JURISDICTION

Unless otherwise directed by VA, the Authority Having Jurisdiction is the VISN Safety Officer.

1.4 COORDINATION

(a) The A/E shall coordinate planning and design work with the architectural, structural, civil, site, sanitary, mechanical, fire protection, and LEED/Sustainable designs, as applicable. Of particular focus shall be concealed and underground areas, and site utility coordination. Provide adjustable frequency drives for motors as required on the mechanical drawings; provide branch circuit power to terminal units, terminal unit fans, smoke dampers, control panels, and other auxiliaries; and provide fire alarm design as required for the mechanical systems.

(b) Utility Coordination:

(1) For projects requiring new electrical or telecommunications service, the A/E shall coordinate requirements with the local utility service company. The Contractor's scope of work, as it relates to the service, shall be detailed in the Construction Documents. The A/E shall forward copies of all correspondence and minutes of meetings with the utility company's representatives to the Project Manager regarding negotiations for new services or making changes to the existing services.

(2) For renovations of and/or additions to existing buildings, the A/E shall investigate the existing electrical service/distribution system and determine whether sufficient capacity is available to accommodate the new loads. If applicable, the A/E shall inform the electric utility company of the new service requirements and additional loads.

(3) Major site distribution components, such as medium voltage and low voltage power feeders, ductbanks, and manholes, shall be shown on the civil utility plans for coordination purposes.

(c) Pre-Design Site Survey: For renovations of and/or additions to existing buildings, the A/E shall perform the following tasks:

(1) Electrical Load Monitoring: Investigate the existing electrical service/distribution system and determine whether sufficient capacity is available to accommodate the new loads. Meter readings are required per NEC.

(2) Existing Electrical Installation: Investigate all existing electrical installations such as existing concealed conduit runs, conduit types/sizes, cable types/sizes, panelboard types/sizes, electrical equipment locations, etc., which potentially impact the new installation.

1.5 VA DESIGN CRITERIA

Pertinent standards of VA's Office of Construction and Facilities Management Technical Information Library (TIL). Some of the major standards are:

1.5.1 MASTER SPECIFICATIONS (PG-18-1)

Located in Technical Information Library

http://www.cfm.va.gov/TIL/spec.asp

Purpose

Defines a standardized method for the A/E to ensure that the contractor provides equipment and systems that meet the design intent in terms of performance, quality, and cost.

The Specifications accomplish this by:

- Providing specific narrative descriptions of required equipment, salient elements, and system construction
- Listing applicable standards and codes and references
- Requiring individual submittal of equipment and systems for review and approval prior to contractor purchase
- Defining specific installation methods to be used

1.5.2 DESIGN AND CONSTRUCTION PROCEDURES (PG-18-3)

Located in Technical Information Library

http://www.cfm.va.gov/TIL/cPro.asp

Purpose

Establishes minimum consistent design/construction practices.

The Procedures accomplish this by:

- Referencing applicable codes and policies
- Describing standard drawing formats
- Listing security strategies
- Including miscellaneous design details

1.5.3 NATIONAL CAD STANDARD, VHA APPLICATION GUIDE & STANDARD DETAILS (PG-18-4)

Located in Technical Information Library

http://www.cfm.va.gov/TIL/sDetail.asp

Purpose

VHA Application Guide adopts the NIBS National CAD Standard, establishes VA-specific drafting standards for the preparation of design and construction documents, and provides utility and sheet template files and standard construction details, organized by discipline, for use in design and construction documents for VA projects.

1.5.4 EQUIPMENT REFERENCE MANUAL (PG-18-5)

Located in Technical Information Library

http://www.cfm.va.gov/TIL/equip.asp

Purpose

Information for planning and developing requirements for contractor purchased and installed equipment for VA construction projects.

1.5.5 DESIGN MANUALS (PG-18-10)

Located in Technical Information Library

http://www.cfm.va.gov/til/dManual.asp

Purpose

To convey the general and specific VA design philosophy for medical and support facilities.

The Manuals accomplish this by:

- Explaining specific design methodologies
- Listing acceptable system types
- Setting the overall energy consumption target
- Codifying certain code interpretations
- Listing values for design parameters
- Referencing certain sections of the Master Specification and Standard Details
- Containing examples of certain design elements

Note: The A/E shall submit to VA a list of Design Manuals along with the TIL posted dates that were in effect on the date of contract award.

1.5.6 DESIGN GUIDES (PG-18-12)

Located in Technical Information Library

http://www.cfm.va.gov/til/dGuide.asp

Purpose

Provides the A/E with specific layout templates and medical equipment lists for all types of spaces/uses, and specific design parameters for structural, electrical, and mechanical service.

The Design Guides accomplish this by:

- Publishing design narrative
- Including functional diagrams and layout plates
- Listing standards

1.5.7 DESIGN SUBMISSION REQUIREMENTS (PG-18-15)

Located in Architect/Engineer Information

http://www.cfm.va.gov/contract/aeDesSubReq.asp

Purpose

To provide a staged listing of tasks in various design categories to define the A/E scope in order to ensure thorough and timely completion of the final design package and bid documents.

The Instructions accomplish this by:

- Progressively listing tasks as Schematic, Design Development, and Construction Documents stages
- Requiring task completion and submission for each stage according to a Critical Path Method (CPM) calendar
- Implementation of a QA/QC process to ensure a quality design product
- Requiring life-cycle analysis of alternatives in order to optimize the design/cost tradeoff
- Listing and detailing all the drawings, calculations, and specifications required for a complete design package
- Indicating the final distribution of bid documents

1.5.8 ARCHITECT/ENGINEER REVIEW CHECKLIST

Located in Technical Information Library

http://www.cfm.va.gov/til/projReq.asp

Purpose

Provides the VA Peer Reviewer with a minimum list of critical items, which must be included in each A/E submission.

The Checklist accomplishes this by:

- Referring to all applicable VA design tools which apply to the specific project
- Detailing certain Life Safety and coordination requirements

1.5.9 DESIGN ALERTS

Located in Technical Information Library

http://www.cfm.va.gov/til/alert.asp

Purpose

Communicates current design issues and solutions.

The Design Alerts accomplish this by:

- Publishing periodic alert memos
- Summarizing design solutions

1.5.10 QUALITY ALERTS

Located in Technical Information Library

http://www.cfm.va.gov/til/alert.asp#qalert

Purpose

Communicates quality deficiencies from recent A/E design submissions.

The Quality Alerts accomplish this by:

- Publishing checklists of design details often missed
- Including references to technical resources

1.5.11 PHYSICAL SECURITY DESIGN MANUAL FOR VA FACILITIES - MISSION CRITICAL FACILITIES & LIFE SAFETY PROTECTED FACILITIES

Located in Technical Information Library
http://www.cfm.va.gov/til/spclRqmts.asp#PHS

Purpose
Sets physical security standards for facilities required to continue operation during a natural or man-made extreme event and for facilities that are required to protect the life safety of patients and staff in an emergency.

The Manuals accomplish this by:

- Setting objectives for physical security
- Providing strategies for use in design and construction to provide protection to VA facilities
- Providing cost-effective design criteria

1.5.12 COST ESTIMATING MANUAL

Located in Technical Information Library

http://www.cfm.va.gov/cost/

Purpose

To convey the general and specific VA cost estimating philosophy for medical facilities.

The Manual accomplishes this by:

- Explaining specific estimating methodologies
- Presenting examples of certain design elements

1.5.13 SUSTAINABLE DESIGN AND ENERGY REDUCTION MANUAL

Located in Technical Information Library

http://www.cfm.va.gov/til/sustain.asp

Purpose

This manual identifies the seven sustainability goals outlined in the Federal Mandates, and maps each goal to the appropriate LEED strategy for implementation. Possible methods to achieve the goals, budget considerations, case studies, and checklists are also included.

The Manual accomplishes this by:

- Prescribing the use of integrated design practices
- Providing strategies for optimization of energy performance
- Providing strategies for protection and conservation of water resources
- Providing strategies for enhancement of indoor environmental quality
- Providing strategies for reduction of environmental impact of materials

1.5.14 SEISMIC DESIGN REQUIREMENTS (H-18-8)

Located in Technical Information Library

http://www.cfm.va.gov/til/seismic.asp

Purpose

Policies established to ensure that all new and existing VA hospital facilities in seismic areas are designed to remain operational after an earthquake.

1.5.15 FIRE PROTECTION DESIGN MANUAL

Located in Technical Information Library

http://www.cfm.va.gov/til/spclRqmts.asp#FS

Purpose

Provides fire protection design criteria, including fire alarm requirements.

1.5.16 VA HOSPITAL BUILDING SYSTEM

The VA Hospital Building System (VAHBS) is a methodology based on a modular concept for planning, designing, and constructing hospitals.

The methodology has been used nationwide with success in capital and operating cost containment, shortened delivery schedules, and improved space utilization flexibility. All new and replacement VA hospital buildings should use the VAHBS system. Also consider using this system for major additions to existing hospitals where future adaptability is an important factor.

The A/E will find that systems schematic/design development efforts will occur much earlier in the overall planning/design process, due to the modular concept. Equipment selection and main distribution sizing should be evaluated as soon as the size and number of modules is determined.

See VHA Program Guide PG-18-3, Design and Construction Procedures, Topic 3, VA Hospital Building System for further guidance. The complete reference for the VAHBS is contained in the 1976 Development Study (called the Redbook) and the 2006 Supplement.

1.5.17 COMPUTER AIDED FACILITIES MANAGEMENT REQUIREMENTS (CAFM)

VA intends to implement Computer Aided Facility Management (CAFM) systems in all new and replacement hospital construction, and in all existing hospitals, as feasible. The CAFM concept requires that all pertinent data regarding a facility be contained in a master digital database, accessible by facilities personnel at their workstations for use in operations, energy/cost

management, and maintenance, and for planning modifications in facility infrastructure due to space utilization changes.

1.6 OTHER DESIGN CRITERIA

1.6.1 ENERGY CONSERVATION

The need to conserve energy is mandated by the Federal Government by Executive Order and by Law enacted by Congress. In addition, 19 Federal Agencies have signed a Memorandum of Understanding (MOU) outlining specific goals and targets for energy conservation and sustainable design. VA is one of the signatory agencies. In the following paragraphs, references and details of various requirements are given.

1.6.2 DOE INTERIM FINAL RULE

In the Federal Register (Volume 71, No. 232), dated December 4, 2006, the Department of Energy (DOE) issued mandatory energy conservation guidelines, as the interim final rule for implementing provisions in the Energy Policy Act (EPACT 2005). Provisions of the interim final rule are as follows:

1.6.2.1 ASHRAE Standard 90.1 - 2004

Lighting systems shall be designed to comply with the ANSI/ASHRAE/IESNA Standard 90.1 – 2004 for Buildings except Low-Rise Residential Buildings. This Standard is a component of the DOE *interim final rule.* By reference, DOE has incorporated Standard 90.1-2004 into 10 CFR Part 433. Also, the US Congress has prescribed this standard in Section 109 of the Energy Policy Act of 2005 (EPACT). Provisions of this standard are mandatory and are not repeated here to avoid duplication. However, at appropriate places in the text, this standard is referenced.

The A/E is expected to fully comprehend and implement the practices dictated in ASHRAE 90.1 – 2004.

1.6.2.2 Additional Mandated Energy Conservation Measures

In addition to complying with the ASHRAE Standard, DOE has mandated that a new Federal building must be designed to achieve an energy consumption level that is at least 30% below the level achieved under Standard 90.1-2004, ***if life-cycle cost effective.*** Use the Performance Rating Method – Appendix G of ASHRAE Standard 90.1 – 2004.

(a) Life-Cycle Cost (LCC) Analysis (Requirements): If an additional 30% reduction in energy consumption is not life-cycle cost-effective, the A/E must evaluate alternate designs; at successive decrements (say, 25%, 20%, or lower) in order to identify the most energy-efficient design that is life-cycle cost-effective. To do so, the A/E must consider and evaluate all readily available energy conservation measures with which the industry is generally familiar.

DOE further stipulates that the "agencies must estimate the life-cycle costs and energy consumption of the planned building as designed and those of an otherwise building just meeting the minimum criteria set forth in the baseline ASHRAE Standard." This measure is meant to demonstrate and record the extent of the mandated compliance.

(b) Life-Cycle Cost Analysis (Methodology): To comply with the Public Law 95-619, an engineering economic analysis shall be performed in accordance with the procedure outlined by the Department of Energy (DOE) in the National Institute of Standards and Technology (NIST) Handbook 135 dated February 1996 (or the latest version) – Life Cycle Costing Manual for the Federal Energy Management Program.

Use the following parameters when performing the analysis:

- 20-year life-cycle period for system comparison
- Other features are:
  - 7% discount factor
  - No taxes or insurance, while computing cost

1.6.3 EXECUTIVE ORDER 13423 DATED JANUARY 26, 2007

Mandatory energy conservation requirements are also published in the above Executive Order. The MOU is mentioned in Section 2, paragraph f of the Executive Order. The MOU was signed under the Federal Leadership in High Performance and Sustainable Buildings.

The stated goals and objectives of the MOU are as follows:

1.6.3.1 New Construction

For new construction, reduce the energy cost budget by 30% compared to the baseline performance rating of ASHRAE Standard 90.1 – 2004. This requirement is identical to the interim rule published in the Federal Register.

VA Policy

Reduction in the lighting energy cost budget shall be implemented as the reduction in energy consumption measured as volt-amperes (VA).

1.6.3.2 Major Renovations

For major renovations, reduce the energy cost budget by 20% below pre-renovations 2003 baseline. In the event pre-renovation 2003 baseline data is not available, the A/E shall calculate the lighting energy consumption before renovation, compare it with the energy consumption after renovation, and document the mandated saving. It is assumed that the use of the facility shall remain similar before and after the renovation. A project classified as “major renovation” shall meet the following two criteria:

(a) For a facility selected for renovation, the area of renovation is greater than 50% of the total area.

(b) A project is planned that significantly extends the building's useful life through alterations or repairs and totals more than 30% of the replacement value of the facility.

VA Policy

Reduction in the lighting energy cost budget shall be implemented as the reduction in energy consumption measured as volt-amperes (VA).

1.6.3.3 Additional Measures (MOU)

MOU also addresses related issues, such as commissioning and measurement and verification. These issues are described below.

1.6.4 COMMISSIONING

Employ total building commissioning practices tailored to the size and complexity of the building and its system components in order to verify performance of building components and systems and help ensure that design requirements are met. This should include a designated commissioning authority, the inclusion of commissioning requirements in construction documents, a commissioning plan, verification of the installation and performance of systems to be commissioned, and a commissioning report.

1.6.5 MEASUREMENTS AND VERIFICATION

Per DOE Guidelines issued under Section 103 of EPACT, install building level utility meters in new major construction and renovation projects to track and continuously optimize performance. MOU mandates that the actual performance data from the first year of operation shall be compared with the energy design target. After one year of occupancy, measure all new major installations using the Energy Star® Benchmarking Tool for building and space types covered by ENERGY STAR® or FEMP designated equipment.

1.7 APPLICABLE CODES AND STANDARDS

1.7.1 GENERAL

Use the latest edition of Codes, Standards and Executive Orders as a basis of design. Refer to PG-18-3, Topic 1, Codes, Standards and Executive Orders. Unless otherwise indicated by VA criteria, use the Codes and Standards of the following organizations:

(a) American National Standards Institute (ANSI)

(b) American Society for Testing Materials (ASTM)

(c) Building Industry Consulting Service International (BICSI)

(d) Federal Communications Commission (FCC), all Regulations, Procedures, and Standards for Two-Way Radio Equipment, Systems and Operation

(e) Illuminating Engineering Society of North America (IESNA)

(f) Institute of Electrical and Electronic Engineers (IEEE)

(g) International Organization for Standardization (ISO), Standards for Protocols and Interfaces that include Open System Interconnections (OSI)

(h) Joint Commission on Accreditation of Healthcare Organizations (JCAHO), Environment of Care Guidelines and Standards

(i) National Fire Protection Association (NFPA): A/E shall pay particular attention to the following publications:
- NFPA 20 – Standard for the Installation of Stationary Pumps for Fire Protection
- NFPA 70 – National Electrical Code
- NFPA 70 E – Standard for Electrical Safety Requirements for Employee Workplaces
- NFPA 72 – National Fire Alarm Code
- NFPA 75 – Standard for the Protection of Electronic Computer/Data Processing Equipment
- NFPA 77 – Recommended Practice on Static Electricity
- NFPA 99 – Standard for Health Care Facilities
- NFPA 101 – Life Safety Code
- NFPA 110 – Standard for Emergency and Standby Power Systems
- NFPA 780 – Standard for the Installation of Lightning Protection Systems

(j) National Electrical Manufacturers Association (NEMA)

(k) Underwriters' Laboratories, Inc. (UL)

(l) Telecommunications Industry Association and Electronic Alliance Standards Association (EIA/TIA) 568 and/or 569A, Communications Cabling Circuits and Equipment

(m) Building Industry Consulting Service International, Inc. (BICSI): A/E shall pay particular attention to the following publications:
- Outside Plant Design Reference Manual
- Telecommunications Distribution Methods Manual
- Network Design Reference Manual

(n) ANSI/TIA/EIA-942 – Telecommunications Infrastructure Design for Data Centers

(o) United States Department of Commerce, National Telecommunications and Information Administration (NTIA), Manual of Regulations and Procedures for Federal Radio Frequency

Management for all Two-Way Radio and Radio Paging Systems, all Narrow-Band and Frequency Use Standards

1.7.2 LOCAL CODES AND CONDITIONS

The A/E shall bring local and regional climatic and geographic conditions, and provisions of local building codes that are significantly different from the codes and standards listed above to the attention of VA and shall provide specific information on how the proposed design will reflect these conditions and codes. Of particular focus shall be local codes, code amendments, and/or conditions related to coastal, hurricane-prone, arctic, or seismically-active regions, or other climatic or regional conditions that warrant additional measures to protect the integrity of systems.

1.7.3 LOCAL UTILITY

The A/E shall follow the rules and regulations of the local electric company, where applicable. The A/E shall investigate potential rebates, etc., offered by the local electric company for the use of energy saving equipment.

1.8 DESIGN REQUIREMENTS

(a) All conductors, all transformer windings, and all bussing in electrical power distribution system components shall be copper.

(b) Motors rated 1/2 HP and higher shall be 3-phase. Design and specifications shall be based upon 200V (volt) motors for 208V systems and 460V motors for 480V systems.

(c) Provide detailed schedules for switchgear, switchboards, panelboards, and motor control centers on the drawings. At a minimum, the schedules shall indicate equipment ratings, enclosure type, load descriptions, interrupting ratings, breaker/starter sizes, and connected and demand loads in kVA by phase. The A/E shall determine probable equipment sizes from several manufacturers, and ascertain that the electrical rooms are sufficiently sized. Consider largest and/or heaviest dimensions and weights so that working clearance requirements, space for future installations, and structural requirements are satisfied.

(d) Specifications:

- VA Master Specifications have been developed for typical electrical work. The appropriate sections shall be edited to meet the project scope of work and specific project requirements.
- The A/E shall carefully coordinate specifications with the drawings so that all work required by the drawings is included in the specifications. Specification content that does not apply to the project shall be deleted.
- The A/E shall develop specifications for any system or equipment not addressed by the VA Master Specifications.

1.9 CRITERIA UNIQUE TO VA

1.9.1 DRAWINGS

(a) Refer to VA Design and Construction Procedures (PG-18-3), Topic 2 – Drawings, and the VA NCS Application Guide, for general drawing requirements.

(b) Consolidate notes and place them on the right-hand side of the sheet.

(c) Show scale, compass point, orientation, key plan, title, column grids and numbers, matchlines, room numbers, and titles corresponding to the Architectural drawings.

(d) Provide large-scale (minimum 1/4"=1') partial plans for areas such as Electrical Rooms, Generator Rooms, Main Computer Room, Telephone Equipment Room, Telecommunications Rooms, and Mechanical Equipment Rooms.

(e) It is mandatory to show the number of wires in each branch circuit conduit on the plans. Include the number of wires in all interconnecting conduits for all wiring devices, fixtures, and equipment.

(f) Provide 1/4-inch scale details of special equipment spaces, such as Laboratories, Radiology, Dietetic Areas, Surgical Rooms, Electrical Rooms, and Telecommunications Rooms.

(g) Conduit runs for all feeder circuits shall be shown on plans as close to the location of final installations as possible to avoid field installation conflicts which are likely to cause costly construction change orders and delays. These conduit runs shall be shown to run in parallel with the building outline, and be coordinated with existing field conditions and new installations of electrical and other systems. These conduit runs shall have the appropriate number of pullboxes located at appropriate distances to facilitate efficient installation and maintenance.

(h) Branch circuit homeruns shall not have more than three circuits. Combining circuits is prohibited.

(i) At a minimum, the construction documents shall contain diagrams of the following systems:

- Essential Electrical System Distribution (Riser Diagram); Essential Electrical System Controls and Operation (Riser Diagram); Sequences of Operation
- Fire Alarm System (Riser Diagram) (note that fire alarm system is to be shown on the Fire Protection drawings; refer to PG-18-15 for more information)
- Ground Sensing System for Secondary Breakers (480 volt Systems only)
- Primary Service and System Distribution (One-line Diagram)
- Grounding Systems and components for the medium/low voltage service switchgears/switchboards to the low voltage distribution panels (One-line Diagram), including but not limited to grounding electrodes, grounding electrode conductors, grounded conductors, ground bus, bonding jumpers, and equipment grounding conductors
- Secondary System Distribution (Riser Diagram)

- Grounding Riser Diagram for Essential and Normal Power Systems
- Protective Relaying System, Power Monitoring, and Control System (One-line Diagram)
- Telephone, Data, Nurse Call, MATV, CCTV, Intrusion Detection, Access Control, and Other Signal Systems (Riser Diagrams)

1.9.2 SEQUENCE OF ELECTRICAL DRAWINGS

- Symbols and Abbreviations
- Demolition Plans
- Electrical Site Plan(s)
- Lighting Plans
- Power Plans
- Lightning Protection Plans (may be combined with roof and ground floor/site power plans on projects with few lightning protection components)
- Telecommunications Plans
- Signal or Other Plans
- One-line Diagrams and Riser Diagrams
- Details
- Schedules, Summary Load Studies, Lighting Fixture Schedule

Fire alarm systems are part of the Fire Protection discipline, and shall be shown on the Fire Protection Plans.

Signal Systems may be combined with Power Systems on projects with a minimal number of signal devices.

1.9.3 ABBREVIATIONS AND SYMBOLS

Use only the abbreviations and symbols shown in the VA Standard Details (PG-18-4) and the NCS Application Guide.

1.9.4 PROPRIETARY ITEMS

Do not use trade names or other indications that identify a product of an individual manufacturer on any project, unless specifically approved and as follows:

- Where necessary to identify existing equipment.
- Where an existing system is to be extended and competitive manufacturers cannot meet performance or dimensional requirements.
- Where required by a public utility or municipal system as a condition of its services, construction specifications developed by the A/E shall state this condition.

1.10 CALCULATIONS

1.10.1 GENERAL

It is the responsibility of the A/E to prepare and submit, or specify, calculations as required by the type of design work performed. Calculations shall justify lighting designs; size of each conductor, raceway, overcurrent protective device, equipment bus, generator, transformer, etc.;

setting of each overcurrent protective device with adjustable characteristic; required PPE to meet arc flash energy levels; etc. It is the responsibility of the A/E to determine which calculations to perform and which calculations to specify for the Contractor to perform. Not all calculation types shall be required for all projects. VA reserves the right to request additional calculations to suit the project.

The A/E shall submit the following calculations to VA: fault current calculations, protective device coordination study, if not provided by the Contractor per Master Specification Section 26 05 71, arc flash calculations when not required to be performed by the Contractor per Master Specification Section 26 05 71, load calculations, generator-set sizing calculations, voltage drop calculations, harmonic distortion calculations, lightning protection system risk analysis, and lighting calculations.

1.10.2 FAULT CURRENT CALCULATIONS

Prepare and submit calculations for all new projects and renovations to existing electrical distribution systems. The available fault currents shall be included on the riser diagrams, and shall show the available fault current (expressed in amperes, RMS symmetrical) at each overcurrent protective device and transformer in the system. Supporting calculations (such as those resulting from a SKM PowerTools™ analysis) that justify the summary available fault currents on the riser diagrams may be submitted separately in 8.5" x 11" format.

1.10.3 PROTECTIVE DEVICE COORDINATION CALCULATIONS

Prepare, or specify in Specification Section 26 05 71, a coordination study to determine the required settings of protective devices to ensure selective coordination. If performed by the A/E, the calculations and related work shall be based on at least one selected electrical power equipment manufacturer. The calculations will not form part of the construction contract documents. However, the A/E shall submit hard copies and electronic files of the calculations to VA for review and comment. If specified to be performed by the Contractor, the calculations and related work shall be based on the approved material for the project. Moreover, the calculations shall be part of the equipment submittals during the construction phase. Refer to Master Specification Section 26 05 71, ELECTRICAL SYSTEM PROTECTIVE DEVICE STUDY, for more information.

1.10.4 ARC FLASH CALCULATIONS

Perform or specify an arc flash analysis in accordance with IEEE Std 1584a. For each bus analyzed, determine the following: Flash Hazard Protection Boundary, Incident Energy Level, Required Personal Protective Equipment Category, Type of Fire Rated Clothing, Limited Approach Boundary, Restricted Approach Boundary, and Prohibited Approach Boundary. Present the data from the arc flash analysis in tabular format, and submit the preparation of arc flash warning labels for each piece of electrical equipment listed above, showing the date of issue for each, or specify to be submitted. Or, if appropriate to the project, specify that the Contractor do so.

1.10.5 LOAD CALCULATIONS

Prepare and submit load calculations that justify the size of each branch circuit and feeder, overcurrent protective device, transformer, and equipment bus (panelboard, switchboard, switchgear, automatic transfer switch, etc.). Calculations shall be performed at all voltage levels. The method of calculation shall be clearly presented in the drawings, including all applicable NEC diversity factors and non-coincident loads and their employment at various levels of the electrical system, as well as the capacity reserved for future load. Calculations may be in panel schedule and switchboard schedule format. It shall be possible for the VA reviewer to follow the load flow from the lowest level to the highest level of the riser and one-line diagrams.

1.10.6 GENERATOR SIZING CALCULATIONS

Prepare and submit calculations that justify the size of each generator or paralleled fleet of generators, including but not limited to all loads downstream of the generator set(s) and the sizing impacts of proposed load steps, significant motor loads, non-linear loads, and capacity reserved for future loads. If applicable under NEC Article 517, prudent demand factors and historical data used to justify generator set(s) sizing shall be clearly presented.

1.10.7 VOLTAGE DROP CALCULATIONS

Prepare and submit calculations demonstrating compliance with the following voltage drop limits: 2% for feeders and 3% for branch circuits, taken at design load.

1.10.8 HARMONIC DISTORTION CALCULATIONS

For Energy Center projects only. Prepare and submit calculations estimating the voltage and current total harmonic distortion (THD) for buses rich in non-linear loads, typically Energy Center switchboards which feed large horsepower pump motors controlled by adjustable speed drives. Use these calculations to justify active or passive components to mitigate harmonic distortion.

1.10.9 LIGHTNING PROTECTION CALCULATIONS

Prepare and submit calculations as described in Annex L of NFPA 780.

1.10.10 LIGHTING CALCULATIONS

Refer to SECTION 6.3, LIGHTING CALCULATIONS.

1.11 SEISMIC BRACING

1.11.1 REFERENCES

Refer to H-18-8, "VA Seismic Design Requirements." ***Coordinate with the Structural Engineer so that seismic bracing is provided as required***.

1.11.2 DRAWINGS

Contract drawings shall show the detail methods of anchoring electrical equipment. Drawings shall include the size, number, and type of anchors and fasteners to be used to secure the equipment against the seismic forces and to meet codes. Calculations for equipment anchoring shall be performed by a registered structural engineer.

1.11.3 EQUIPMENT BRACING

Refer to Section 13 05 41 for seismic bracing requirements. Typically, all lighting, power, telecommunications, and signal equipment and enclosures shall be seismically braced and/or anchored.

1.12 TRANSPORT SYSTEMS

Refer to PG-18-10, TRANSPORT SYSTEMS DESIGN MANUAL FOR HOSPITAL PROJECTS for requirements. Refer to PG-18-10, FIRE PROTECTION DESIGN MANUAL for fire alarm connection requirements.

1.13 FIRE ALARM SYSTEMS

Refer to PG-18-10, FIRE PROTECTION DESIGN MANUAL for requirements.

1.14 RENOVATION TO EXISTING SITES AND BUILDINGS

1.14.1 DRAWINGS

For renovation projects, separate demolition drawings are required for all areas involved in the project. Specific detailing of interfaces between renovated and existing-to-remain conditions shall be clearly indicated on the drawings. The A/E shall fully describe existing equipment affected by a renovation project, including but not limited to existing equipment manufacturer, model, voltage, amperage, and A/C ratings, description, new devices installed, new wires and cables terminated, etc.

1.14.2 MODIFICATION VERSUS REPLACEMENT

Where equipment must be modified to be physically utilized in a project, the following items must be evaluated:

(a) Can the government look to one manufacturer for final responsibility of the modified equipment?

(b) Is there a legitimate cost saving by modifying the existing equipment rather than installing new equipment? If yes, then modification should be considered.

(c) What is the impact on operation and safety during and after construction?

(d) Will the equipment retain a valid UL-listing after modification? If no, the equipment shall be replaced.

1.14.3 AGE AND PHYSICAL CONDITION

(a) The length of time in service and physical condition of wiring, devices, and equipment shall be reviewed prior to considering reuse.

(b) The equipment shall be capable of remaining in use for a minimum of 15 years of additional life or having 60% of remaining life. If not, the equipment shall be replaced.

(c) Where equipment has been in operation for a number of years, physical inspection of terminals, insulation, switching contacts, control wiring, etc., shall be performed by the A/E, The A/E shall make recommendations for use of the equipment to VA.

1.14.4 PARTS AVAILABILITY

(a) After the A/E's site surveys, the availability of spare parts for existing equipment shall be determined.

(b) Where the project involves extending an existing system but the existing equipment spare parts are not available, the A/E shall inform the VA Project Manager in writing. Specific directions shall be given at that time.

1.14.5 CONDUIT AND BOXES

(a) Conduit and boxes shall be removed from existing walls that are to be demolished.

(b) Conduit and boxes in existing walls that are to remain shall be abandoned in place (if not reused) and the boxes shall be provided with blank covers.

(c) Conduit not intended for reuse in existing or new ceilings shall be removed back to the power, telecommunications, or signal system source from which it originates.

(d) Conduit run in the existing concrete slab shall be saw-cut off as it enters the slab, and then sealed to prevent moisture access.

1.14.6 CONDUCTORS

(a) The A/E may wish to have the existing conductors meggered to ensure insulation integrity. Conductors with known deteriorated or damaged insulation shall be replaced with new.

(b) All abandoned conductors or conductors not deemed reusable shall be removed back to the nearest junction box. Where the entire circuit is to be removed, the conductors shall be removed back to the power, telecommunications, or signal system source from which they originate.

(c) New conductors shall not be installed in existing conduit with existing conductors.

1.14.7 WIRING DEVICES

(a) Remove devices that are not to be re-used. Wiring is to be removed in its entirety. Boxes shall be blanked.

(b) Existing receptacles and switches in good operating condition, located at acceptable places, may be reused. Non-Hospital Grade receptacles shall be replaced in all-patient areas with Hospital Grade receptacles.

1.14.8 LIGHTING FIXTURES

(a) Lighting fixtures that cannot be reused shall be removed, including their associated wiring to ceiling-mounted junction boxes.

(b) Per Master Construction Specification requirements, fixtures determined to be reusable in new or existing ceilings shall be cleaned, re-lamped, re-lensed, and re-ballasted prior to being put back to service. Where existing exit signs are non-LED type, they shall be removed and replaced with an LED-type fixture.

1.14.9 PANELBOARDS

(a) Consider panelboards for reuse if physical condition, voltage, current and interrupting ratings, and circuit capacity requirements are met.

(b) Panelboards shall be installed in new or existing electrical rooms and closets. Corridor-mounted panelboards shall not be installed without specific approval from VA. Refer to other sections of this manual for requirements.

(c) In major secondary distribution renovation projects, existing panelboard backboxes may be used as pullboxes for branch circuit transfer. All branch circuit conductors shall be tagged to identify the circuit number to which they are being transferred in the new panel. Provide clear requirements in the contract documents directing the Contractor to revise the circuit numbers on all junction and device boxes and wall plates for the entire run.

1.14.10 GOVERNMENT RETAINED EQUIPMENT

After consulting with the VA Medical Center, determine if the following items shall be retained by government:

- Disconnects of 100A (amperes) Motors and larger
- Fire Alarm Devices
- Nurse Call System Components
- Panelboards and Circuit Breakers
- Special Lighting Fixtures
- Special Receptacles
- Transformers
- Telecommunications System Components
- Signal Systems Components
- Power components installed to provide temporary construction electrical service (if not the property of the Contractor)

1.14.11 CONTINUITY OF SERVICE

(a) Services passing through areas of remodeling shall be maintained throughout the construction period.

(b) Circuits serving areas adjacent to the construction area that are modified as part of a remodeling project, shall be re-circuited as part of the project.

(c) Provide temporary and/or modify existing power, emergency power, lighting, fire alarm, telecommunications, and other services as required for construction-period Interim Life Safety measures.

1.14.12 COMPATIBILITY

Equipment installed shall be compatible with existing components and systems to which it interfaces.

CHAPTER 2: RACEWAYS, WIRING, AND EQUIPMENT

2.1 RACEWAYS 2-3
2.1.1 CONCEALED AND EXPOSED 2-3
2.1.2 UNDERGROUND DUCTS AND CONDUITS 2-3
2.1.3 SPARE CONDUITS 2-3
2.1.4 UNDERFLOOR DUCT SYSTEMS 2-3
2.1.5 RADIOLOGY ROOMS 2-4
2.1.6 POKE-THRUS/POWER POLES 2-4
2.1.7 ETHYLENE OXIDE STERILIZATION AREA 2-4
2.2 GROUNDING 2-5
2.2.1 GROUNDING ELECTRODES 2-5
2.2.2 EQUIPMENT GROUNDING CONDUCTORS 2-5
2.2.3 METAL CURTAIN WALL GROUNDING 2-5
2.3 LIGHTNING PROTECTION SYSTEM 2-5
2.4 MOTOR DISCONNECT SWITCHES 2-6

This page intentionally left blank.

2.1 RACEWAYS

Install all wiring in raceways. Open wiring is prohibited. Raceways shall be as specified in PG-18-1, Master Specifications. Raceway shall comply with the definition of the NEC Article 100.

2.1.1 CONCEALED AND EXPOSED

(a) Exposed conduit is acceptable where finished ceilings are not provided. Wherever it is impractical to conceal conduits, due to economic considerations or the need to accommodate existing field conditions, the A/E shall consult with VA to determine acceptable alternatives.

(b) Electrical conduits may be installed in concrete walls and floors.

(c) Surface metal raceways shall not be installed on the floor. Services to equipment in open non-patient care areas shall be served from under the slab or through tele/power poles wired from the ceiling.

(d) Primary-voltage feeders shall not be exposed on the exterior of buildings.

2.1.2 UNDERGROUND DUCTS AND CONDUITS

(a) Generally, encase underground ducts and conduits in concrete. Direct burial conduit may be used for outdoor lighting and power branch circuits.

(b) The A/E shall make project-specific recommendations for reducing the concrete encasement requirement, taking into account the importance and physical security needs of the conduit(s) involved. Conduits containing Essential Electrical System wiring and telecommunications cabling shall not be exempt from the concrete encasement requirement.

2.1.3 SPARE CONDUITS

Where electrical capacity is reserved for future use, such as bussed space in panelboards, motor control centers, switchboards, and switchgear of all voltage levels, and where under-slab or underground conduit is used, the A/E shall provide spare under-slab or underground conduits to an accessible point. The number and size of conduits shall be appropriate to the equipment and amount of bussed space served.

2.1.4 UNDERFLOOR DUCT SYSTEMS

(a) For new construction of large office areas, provide underfloor power, telecommunications, and signal systems ducts for the following areas:

- Personnel Division
- Registrar Division
- Fiscal Division
- Supply Division
- Other - Any large open office spaces where future flexibility is desirable

(b) Provide duplex receptacle and telecommunications outlet fittings on the underfloor duct to suit the furniture layout.

(c) Space the underfloor ducts 5 ft [1.5 M] on centers. In structural steel frame buildings, use trench header and utilize the cellular steel as the raceway. Coordinate with the structural engineer to ensure that the proper cells are enclosed for raceway use.

2.1.5 RADIOLOGY ROOMS

(a) Radiology rooms typically require a manufacturer-specific conduit and wiring trough system. If VA Medical Center has selected a manufacturer, the A/E may base the design on the manufacturer's shop drawings. If the equipment list is not manufacturer-specific, the A/E shall base the design on a typical radiology system for bidding purposes.

(b) The A/E shall provide the following details on the electrical plans for the Radiology Room(s):

- **Power and Signal Plan:** A/E shall show complete design for general use receptacles, communication, and signal outlets. A/E shall show main circuit and related equipment servicing the radiology equipment. A/E shall confirm radiology equipment power requirement with radiology shop drawings.
- **Lighting Plan:** A/E shall show complete lighting design. A/E shall coordinate lighting locations with radiology shop drawings and drawings from other trades to avoid conflict in field installation.
- **Radiology Raceway Layout Plans:** A/E shall show all surface-mounted and/or recess-mounted raceway systems. A/E shall show wiring tags for all raceway runs. A/E shall coordinate existing field conditions, locations, sizes, and quantities of raceways and cables shown on radiology shop drawings with drawings from other trades to avoid conflict in field installation.
- **Radiology Wiring Schedule:** A/E shall show a schedule for all wiring tags indicating wiring destinations and locations/sizes/types/quantities of all raceways and wirings.
- A/E shall verify that the proposed radiology equipment installation as shown on radiology shop drawings meets all applicable codes, regulations, and existing building conditions.

2.1.6 POKE-THRUS/POWER POLES

In renovation projects for large administrative areas, use fire-rated poke-thru devices and/or power poles, as determined by VA.

2.1.7 ETHYLENE OXIDE STERILIZATION AREA

Determine the extent of the NEC-classified area (if any) in the vicinity of ethylene oxide sterilizers and provide an appropriate raceway system and devices.

2.2 GROUNDING

The grounding system shall be shown complete on the one-line diagram with all components and descriptions from the medium- or low-voltage service to the low-voltage panels, as applicable for each project. The grounding system shall be shown complete on the One-line Diagram for the Normal, Standby, and/or Essential Electrical Systems, including but not limited to generators, automatic transfer switches, electrical equipment, etc.

2.2.1 GROUNDING ELECTRODES

Galvanized steel or copper-clad steel electrodes may be used. All electrodes are to be of the same material for the entire project.

2.2.2 EQUIPMENT GROUNDING CONDUCTORS

All raceways shall contain an equipment grounding conductor. Coordinate with VA Master Specifications and show on the drawings.

2.2.3 METAL CURTAIN WALL GROUNDING

(a) To help ensure that personnel are not exposed to electrical shock, all exterior metal sheathing of buildings shall be grounded.

(b) For buildings with perimeters not exceeding 250 ft [76 M], the sheathing perimeters shall be grounded at diagonally opposite corners of the building.

(c) For buildings with perimeters exceeding 250 ft [76 M], the sheathing perimeters shall be grounded such that the spacing between grounding points does not exceed 100 ft [30 M].

(d) A ground point shall consist of a driven ground rod and brazed connection to the building sheath. A No. 6 AWG bare copper conductor shall be used to connect the sheath to the ground rod.

(e) Where a lightning protection system is provided for the building, the sheath shall also be bonded at each down conductor location.

2.3 LIGHTNING PROTECTION SYSTEM

(a) Lightning protection is mandatory for all Mission Critical buildings. For non-Mission Critical buildings, perform risk analysis per NFPA 780, Annex L, and provide a lightning protection system where $N_d > N_c$. Submit calculations to VA.

(b) Lightning protection systems shall comply with NFPA 780 – Standard for the Installation of Lightning Protection Systems and NFPA 70 – National Electrical Code.

2.4 MOTOR DISCONNECT SWITCHES

Provide all motors with a local disconnect switch (unfused unless required otherwise) located at the motor or a maximum of 5 ft [1.5 M] away, within sight. Clearly indicate this requirement on the Contract Drawings.

CHAPTER 3: RECEPTACLE AND POWER REQUIREMENTS

3.1 GENERAL 3-3
3.2 ESSENTIAL ELECTRICAL SYSTEM CIRCUITS 3-3
3.3 RECEPTACLE CIRCUITS 3-3
3.4 SPECIFIC APPLICATIONS 3-3
3.4.1 GROUND FAULT CIRCUIT INTERRUPTER RECEPTACLES 3-3
3.4.2 HUMAN SURGERY ROOMS 3-3
3.4.3 ICU-CCU FOOT-WALL RECEPTACLES 3-3
3.4.4 EXTERIOR ELECTRICAL RECEPTACLES 3-4
3.4.5 WAITING, LOUNGE AND LOBBY AREAS 3-4
3.4.6 ANIMAL SURGERY ROOMS (RESEARCH) 3-4
3.4.7 SELF-ILLUMINATED EMERGENCY RECEPTACLES 3-4
3.4.8 SPECIAL PROCEDURES ROOM – ISOLATED POWER 3-4
3.4.9 CORRIDORS 3-5
3.4.10 KITCHENS 3-5
3.4.11 OFFICES AND ADMINISTRATIVE AREAS 3-5
3.4.12 LABORATORIES AND RESEARCH FACILITIES 3-5
3.4.13 PHYSICAL MEDICINE AND REHABILITATION SERVICE 3-5
3.4.14 PSYCHIATRIC PATIENT ROOMS 3-6
3.4.15 STAIRWELLS 3-6
3.4.16 INTERSTITIAL SPACES 3-6
3.4.17 TV/CCTV POWER RECEPTACLES 3-6
3.4.18 ELECTRICAL CLOSETS 3-6
3.4.19 TELECOMMUNICATIONS ROOMS 3-6
3.4.20 MOTORIZED TREADMILLS 3-6

This page intentionally left blank.

3.1 GENERAL

(a) "Receptacle" refers to power receptacles, except where signal types are specifically noted. Provide safety receptacles, ground fault current interrupter receptacles, or other special purpose receptacles, as required for the project. All receptacles shall be duplex NEMA 5-20R unless otherwise noted or not commercially available in a particular size. In patient care buildings, all receptacles shall be UL-listed as Hospital Grade, where available, in the size, type, and configuration required.

(b) The A/E shall refer to the appropriate Design Guide, where most receptacle requirements are shown.

3.2 ESSENTIAL ELECTRICAL SYSTEM CIRCUITS

Refer to CHAPTER 4, "ESSENTIAL AND STANDBY ELECTRICAL POWER SYSTEMS," for devices to be backed by an alternate source of power.

3.3 RECEPTACLE CIRCUITS

No more than six receptacles shall be installed on a single branch circuit for general use.

3.4 SPECIFIC APPLICATIONS

3.4.1 GROUND FAULT CIRCUIT INTERRUPTER RECEPTACLES

Provide GFCI receptacles at all locations required by NFPA 70 and 99. GFCI receptacles shall not serve other receptacles from their loadside terminals.

3.4.2 HUMAN SURGERY ROOMS

(a) Refer to Surgical Service Design Guide.

(b) Each receptacle shall have a Critical Power dedicated circuit in a dedicated homerun conduit, except for those mounted in the service columns, which may be wired two to a circuit. Multiwire Critical Branch circuits are not allowed in human surgery rooms.

(c) Wall-mounted receptacles shall be 18 in [450 mm] above the floor.

(d) The need for special receptacles for surgical lasers or portable equipment shall be determined on a project-by-project basis.

3.4.3 ICU-CCU FOOT-WALL RECEPTACLES

Provide two receptacles on the footwall or side wall near the foot of beds in Intensive Care cubicles or Isolation Rooms. Feed these receptacles from different circuits in the respective Prefabricated Bedside Patient Unit (PBPU). Refer to CHAPTER 9 for PBPU requirements.

3.4.4 EXTERIOR ELECTRICAL RECEPTACLES

Provide exterior weatherproof GFCI receptacles mounted in NEMA 3R weatherproof enclosures with 75 ft [25 m] spacing maximum, at the following locations. Branch circuits for the receptacles may feed more than one receptacle, but shall not also feed interior receptacles.

- Exterior walls of penthouses for maintenance of roof areas
- Major entrances to buildings
- Courtyards and enclosed (or partially enclosed) garden areas
- Loading docks and maintenance yards
- Major mechanical equipment enclosures
- Cooling towers
- Major service equipment enclosures
- Near sanitary sewer cleanouts close to building walls.

3.4.5 WAITING, LOUNGE AND LOBBY AREAS

Provide tamper-resistant receptacles every 8 ft [2.4 M] in waiting, lounge, and lobby areas.

3.4.6 ANIMAL SURGERY ROOMS (RESEARCH)

(a) Design operating rooms for non-flammable anesthetics only.

(b) Provide non-explosion proof, locking receptacles at ceiling locations and Hospital Grade receptacles at wall locations.

(c) Provide eight single Hospital Grade power receptacles for general use at each table: four flush-mounted in the ceiling (two at each end of the table), and four distributed along the permanent wall(s) associated with the table.

(d) Provide one power receptacle on each wall mounted at 4 ft [1.2 M] above the floor.

(e) Provide portable X-ray outlet at 4 ft [1.2 M] above the floor.

(f) Provide X-ray film viewers at 4 ft [1.2 M] above the floor to the bottom of the unit.

3.4.7 SELF-ILLUMINATED EMERGENCY RECEPTACLES

In rooms without general illumination on emergency power, emergency receptacles shall be of the self-illuminated type. Night lights, pilot lights, and instrument lights are not considered general illumination.

3.4.8 SPECIAL PROCEDURES ROOM – ISOLATED POWER

In renovation projects that affect existing isolated power systems, the A/E shall coordinate with the VA Project Manager and the Medical Center to determine whether to modify an existing isolated power system, or remove it and install new non-isolated power components.

3.4.9 CORRIDORS

Provide receptacles for cleaning machines at no more than 75 ft [23 M] spacing, except those in Nursing Unit corridors, where receptacles shall be a maximum of 40 ft [12 M] apart. These receptacles shall be on a dedicated circuit serving only corridor receptacles.

3.4.10 KITCHENS

(a) Coordinate requirements with kitchen equipment list. Provide appropriate receptacles for each cord-connected piece of kitchen equipment. Other equipment shall be permanently wired using liquid tight flexible conduit.

(b) For equipment located on an island, provide island-mounted, waterproof, floor pedestal type receptacles.

(c) Provide a means to disconnect electrical power to all equipment beneath Type I hoods if the fire suppression is activated.

3.4.11 OFFICES AND ADMINISTRATIVE AREAS

(a) Small Rooms: Provide receptacles with 10 linear ft [3 M] maximum spacing as measured around the floor line, excluding doorways. For all linear wall space 5 ft [1.5 M] and greater, provide at least one receptacle for general and computer uses.

(b) Open Spaces and Large Rooms: Install receptacles for large administrative rooms in underfloor raceways or in Tele/Power poles. Refer to SECTION 2.1.4, UNDERFLOOR DUCT SYSTEMS.

3.4.12 LABORATORIES AND RESEARCH FACILITIES

Refer to Research Laboratory Design Guide.

3.4.13 PHYSICAL MEDICINE AND REHABILITATION SERVICE

(a) Occupational Therapy Preparation and Treatment Rooms, Occupational Therapy Clinics, and Manual Arts Therapy Clinics: Provide heavy-duty multiple surface metal raceway 208V (volt) and 120V receptacles at 48 in [1200 mm] intervals on walls, with their centerlines located 40 in [1000 mm] above the finished floor.

(b) Educational Therapy Classrooms: Provide light-duty 120V surface metal raceway receptacles at 36 in [900 mm] intervals on all walls, with centerlines located 40 in [1000 mm] above the finished floor.

(c) Other Receptacles: When appropriate, provide safety receptacles for other services in the RMS Area. Flush-mount all floor receptacles in treatment areas with appropriate removable covers.

3.4.14 PSYCHIATRIC PATIENT ROOMS

Provide GFCI tamper-resistant receptacles with beveled, metal-edged cover plates in psychiatric patient rooms. Psychiatric patient room receptacles shall be on a dedicated circuit such that they may be shut off independently, without affecting other rooms.

3.4.15 STAIRWELLS

Provide a receptacle for vacuum-cleaning on every other floor landing.

3.4.16 INTERSTITIAL SPACES

Provide receptacles every other column. Where catwalks are installed instead of a walk-on platform, provide receptacles along the catwalks at 40 ft [12 M] spacing maximum. In addition, provide receptacles at each entrance to the interstitial space.

3.4.17 TV/CCTV POWER RECEPTACLES

Provide a receptacle in conjunction with each CCTV camera, CCTV monitor, and TV receiver. Such receptacles are not necessary where the equipment is low-voltage, powered by headend equipment.

3.4.18 ELECTRICAL CLOSETS

Provide a receptacle with its centerline located 40 in [1000 mm] above the finished floor adjacent to the room door.

3.4.19 TELECOMMUNICATIONS ROOMS

Refer to CHAPTER 8.

3.4.20 MOTORIZED TREADMILLS

If not provided integral to the treadmill, provide an in-line circuit interrupter at the treadmill unit which requires manual resetting to restore power in the event of a power interruption.

CHAPTER 4: ESSENTIAL AND STANDBY ELECTRICAL POWER SYSTEMS

4.1 GENERAL 4-3
4.2 MIXED ESSENTIAL AND STANDBY ELECTRICAL POWER SYSTEMS 4-3
4.3 COMMISSIONING 4-3
4.4 EQUIPMENT AND RATINGS 4-3
4.4.1 GENERATORS 4-3
4.4.2 AUTOMATIC TRANSFER SWITCHES (ATS) 4-3
4.4.3 CONTROL NETWORK 4-3
4.4.4 DIESEL FUEL STORAGE 4-4
4.4.5 LOCATION 4-4
4.5 EXISTING FACILITIES 4-4
4.6 ESSENTIAL ELECTRICAL SYSTEMS FOR HOSPITALS 4-4
4.6.1 ENFORCING CODES 4-4
4.6.1.1 Life Safety Branch 4-4
4.6.1.2 Critical Branch 4-5
4.6.2 EQUIPMENT BRANCH 4-6
4.6.2.1 Equipment Branch Non-Delayed Automatic Connection 4-6
4.6.2.2 Equipment Branch Delayed-Automatic Connection 4-6
4.6.3 ALTERNATE SOURCE OF POWER 4-8
4.7 ESSENTIAL ELECTRICAL SYSTEM FOR NURSING HOMES AND LIMITED CARE FACILITIES 4-8
4.7.1 LIFE SAFETY BRANCH 4-8
4.7.2 CRITICAL BRANCH 4-8
4.7.3 ALTERNATE SOURCE OF POWER 4-9
4.8 ESSENTIAL ELECTRICAL SYSTEM FOR OTHER HEALTHCARE FACILITIES 4-9
4.8.1 TYPE 3 LOADS 4-9
4.8.2 ALTERNATE SOURCE OF POWER 4-9
4.9 ESSENTIAL ELECTRICAL SYSTEM FOR OTHER FACILITIES 4-9
4.9.1 BOILER PLANT AND ENERGY CENTER 4-9
4.9.2 FIRE STATION 4-9
4.10 STANDBY ELECTRICAL SYSTEM FOR MISSION CRITICAL FACILITIES 4-10
4.10.1 REQUIREMENTS 4-10
4.10.2 STANDBY SOURCE OF POWER 4-10

This page intentionally left blank.

4.1 GENERAL

This section covers the Essential Electrical Systems and Standby Electrical Systems.

4.2 MIXED ESSENTIAL AND STANDBY ELECTRICAL POWER SYSTEMS

(a) For facilities where full standby power is required, it is permissible for the Standby Electrical System generators to provide power to the Essential Electrical System if the Standby Electrical System, as a whole, meets the requirement of the NFPA 99, NFPA 110, and other applicable codes.

(b) Refer to APPENDIX B, DRAWINGS for more information on possible system topologies.

4.3 COMMISSIONING

(a) In addition to installation acceptance testing specified in NFPA 110, a commissioning plan shall be developed, specified, documented, and executed to ensure proper operation of the Essential Electrical System, both its individual components and the system as a whole. The commissioning plan shall include, but not be limited to, all sources of power, paralleling switchgear, transfer switches, fueling systems, and tank leak detection, interconnections to other systems, annunciators, load shedding, exercise functions, peak shaving, and communications pathways between equipment.

(b) The A/E shall prepare control and operation drawing(s) or stipulate that the Contractor prepare them, as part of system commissioning and operations and maintenance documents. The drawings shall show all elements of the system and their interrelationships, including both power and control interconnections and sequences of operation. Physical locations of equipment shall be included.

4.4 EQUIPMENT AND RATINGS

4.4.1 GENERATORS

Generators used for the Standby Electrical System shall be rated as Limited Running Time prime power. If separate from the Standby Electrical System generators, generators dedicated to the Essential Electrical System shall be rated as standby.

4.4.2 AUTOMATIC TRANSFER SWITCHES (ATS)

ATS shall be 4-pole where the neutral circuit conductor is transferred by the transfer equipment, and the Standby or Essential Electrical System is designed as a separately derived system. ATS shall include the bypass isolation option. ATS shall be limited to 800A (amperes) maximum size and located to provide the highest practicable reliability in service to the load, which generally entails minimizing the switch-to-load distance.

4.4.3 CONTROL NETWORK

ATS, generator remote alarm systems, load shedding controls, and other interconnecting control components of the Standby Electrical System and/or the Essential Electrical System shall be networked over a fiber-optic communications network, which shall be installed in

dedicated raceways and shall not be used to transport information of other systems. The ATS shall be such that it can be monitored, tested, and operated from a single location; typically the paralleling switchgear.

4.4.4 DIESEL FUEL STORAGE

Diesel storage tank(s) shall be provided with leak detection, and a means to prevent degradation of stored fuel due to oxidation, microorganism growth, and corrosion.

4.4.5 LOCATION

(a) Do not locate the first level of distribution of the Standby Electrical System or Essential Electrical System, such as the generators and paralleling switchgear, in the same room with other power systems.

(b) In the generator paralleling switchgear or distribution switchboard, Life Safety Branch overcurrent protective devices shall occupy a dedicated section or sections.

4.5 EXISTING FACILITIES

(a) Variations in wiring arrangements in existing facilities are acceptable if the performance and reliability specified in VA Master Construction Specifications and criteria herein are not compromised. Such variations may particularly occur with certain wiring in separate or common raceways, with certain functions connected to one or another system or branch, or with certain provisions for automatically or manually delayed restoration of power from the alternate (emergency) source of power.

(b) The A/E shall submit a narrative describing the existing conditions and how the new design best meets the intent of applicable codes and provides an equivalent degree of performance and reliability.

(c) When adding the ATS to an existing Essential Electrical System, the A/E shall match the existing pole switching configuration in terms of equipment and design, i.e., 3-pole or 4-pole transfer switches.

4.6 ESSENTIAL ELECTRICAL SYSTEMS FOR HOSPITALS

The Essential Electrical System for hospitals shall comply with the Type 1 system as defined in NFPA 99.

4.6.1 ENFORCING CODES

All requirements for the Emergency System shall comply with NFPA 70, 99, and 110.

4.6.1.1 Life Safety Branch

Shall supply power to loads per NFPA 70 and 99, including:

- Alarm and alerting systems, such as Fire Alarm and Medical Gas Systems
- **Automatic doors:** Used for building egress
- Elevator cab lighting, control, communication, and signal systems
- Exit signs
- **Generator set location:** Task illumination, battery charger for emergency battery-powered lighting units, and selected receptacles
- Illumination of means of egress
- Telecommunications Systems where used for issuing instructions during emergency conditions, including public address and Code One (Blue) systems and Disaster Control or Emergency Communication Centers

4.6.1.2 Critical Branch

Shall supply power to loads per NFPA 70 and 99, and as described below:

- **Acute Nursing:** Task illumination and selected receptacles
- **Stepdown Units:** Task illumination and selected receptacles
- **Anesthetizing Locations:** Task illumination, selected receptacles, and fixed equipment; task illumination includes battery back-up
- **Angiographic Laboratories:** Task illumination, selected receptacles, and selected power circuits
- **Blood, Bone, Eye, and Tissue Banks:** Task illumination, selected receptacles, and refrigerators
- **Cardiac Catheterization Laboratories and Rooms**: Task illumination and X-ray unit
- **Coronary Care Unit:** Task illumination and PBPUs
- **Emergency Room Treatment Areas and Life Support Rooms:** Task illumination and PBPUs
- **General Patient Bedrooms:** Night lights, an alcove or a lavatory mirror light, one receptacle per bedwall, preferably in the PBPU, if available, and a bathroom light
- **Hemodialysis Rooms:** Task illumination and one receptacle for each dialysis unit PBPU
- **Human Physiology Labs:** Task illumination, selected receptacles, and selected circuits
- **Intensive Care Units:** Task illumination and PBPUs
- **Medication Rooms and Medication Preparation Areas:** Task illumination, selected receptacles, and refrigerators
- **Minor Operating Rooms:** Task illumination and selected receptacles
- Nurse Call systems
- **Nurses Stations:** Task illumination and selected receptacles
- **Pharmacy Dispensing Area (including Satellite Pharmacies):** Power files, laminar flow hoods, refrigerators, copier for transmittal of physicians' orders, task illumination, and selected receptacles
- **Psychiatric Bedrooms:** Task illumination (ceiling only)
- **Surgical Operating Rooms:** Task illumination (50% of the general fluorescent fixtures above the surgery table including battery backup within two of these fixtures), all X-ray units, and one film processor per suite
- **Surgical Recovery Rooms:** Lighting fixture over each bed, one receptacle for each bed (or PBPU), night lights for each bed (or PBPU), and emergency alarm circuits
- **Main Computer Room, Backup Computer Room, Telecommunications Rooms, Telephone Operators Room, and Antenna Headend Equipment Room:** All UPS equipment, lighting, and receptacles

- **Ward Treatment Rooms:** Task illumination and selected receptacles
- **Dental Suites:** Each ceiling track operatory surgical light, each dental operating unit, one duplex receptacle in each treatment area, and a storage refrigerator
- **Electrical Rooms:** 50% of lighting and 50% of receptacles; also provide additional battery-powered lighting main electrical room
- **Engineering Control Center and Mechanical Equipment Rooms:** UPS equipment, task illumination, and selected receptacles for operating and controlling internal auxiliary power, data gathering panels, control air compressors, dryers, and any electric control for heating, ventilating, and air-conditioning (HVAC) systems
- **Laboratory Service:** Task illumination, selected receptacles in areas used to continue essential functions or critical experiments in the event of power failure, fume hoods, exhaust fans, and refrigerators
- **Pharmacy Delivery Systems and Delivery Areas:** Task illumination, selected receptacles, dumbwaiter for delivery of STAT requests, and pneumatic tube system for STAT requests if no other delivery system is readily available
- **Respiratory Care Beds:** PBPUs; when PBPU is not provided, task illumination and one receptacle for each bed
- **Security Station:** Monitoring security alarm systems, task illumination, one receptacle, intrusion and duress alarms at agent cashier, pharmacy, drug storage room in warehouse, canteen office, canteen retail store room, and canteen storage
- **Special Procedure Rooms (Radiology):** Task illumination and X-ray unit
- HVAC for Surgical Suites, Intensive Care, Coronary Care, and Emergency Treatment Spaces, and other areas as deemed necessary by VA
- Medical dispensing equipment

4.6.2 EQUIPMENT BRANCH

Shall supply power to loads per NFPA 70, 99, and 110.

4.6.2.1 Equipment Branch Non-Delayed Automatic Connection

Arrange the following generator accessories for non-delayed automatic connection to the alternate power source:

- Electrically operated louvers
- Other generator accessories essential for generator operation
- Transfer fuel pump

4.6.2.2 Equipment Branch Delayed-Automatic Connection

Arrange the following equipment for delayed-automatic connection to the alternate power source, including necessary controls:

- Vacuum pumps and oral evacuation pumps serving medical and surgical functions, including controls
- Sump pumps and other equipment such as associated control systems and alarms required for the safety of major equipment that may be exposed to water
- Medical and dental air compressors serving medical and surgical functions, including controls (such systems may be connected to the Critical Branch; the A/E shall coordinate with the Chief Engineer at the facility)
- Smoke control and stair pressurization

- Kitchen hood supply and/or exhaust systems, if required to operate during a fire in or under the kitchen hood
- Uninterruptible Power Supply (UPS) equipment serving other than telecommunications equipment
- Medical and laboratory refrigerators and freezers as required
- Oxygen storage control panel
- Equipment and control systems for each elevator bank: Design control systems to operate at least one elevator at a time and designate one elevator to serve the Surgical Suite during emergencies
- Fire pump, jockey pump, and make-up pump for water-based fire protection systems; lighting and selected receptacles in fire pump room
- Hyperbaric facilities
- Hypobaric facilities
- Automatic operated doors
- Autoclaving equipment (shall be permitted to be arranged for either delayed-automatic or manual connection to the alternate source)
- **Administrative Areas:** Task illumination and selected receptacles in the hospital Director's, Engineering, and Security and Communications Suites
- Closed-loop water chilling equipment for linear accelerator
- **Domestic Water Pumps:** Equipment, control system, light fixture, and receptacle near the pump
- Electric tape for heat tracing of piping requiring freeze protection
- Heating, ventilating and air-conditioning (HVAC) systems:
  - **Heating Equipment:** Operating Suites, Recovery, Intensive Care, Coronary Care, Infection and/or Isolation Rooms, Emergency Treatment Spaces, and General Patient Rooms; under certain conditions, NFPA 99 may not require heating of General Patient Rooms and Infection Isolation Rooms
  - Air-conditioning equipment, lubricating oil pumps for centrifugal compressors, control air compressors, air dryer and absorption machine refrigerant pump to draw down lithium chloride before crystallization (omit for machines accomplishing this manually)
  - Chillers, chilled water circulating pumps, fans, and controls for surgical suites, recovery rooms, intensive care, and coronary care units
  - Chillers, chilled water circulating pumps, fans, and controls for animal research facilities
  - HVAC equipment for Bone Marrow Transplant (BMT) areas
  - HVAC equipment for Magnetic Resonance Imaging (MRI) Suites and Computerized Topographic (CT) Scanners
  - HVAC equipment serving emergency areas in outpatient clinics in seismic and high-risk hurricane areas
  - HVAC equipment for Main Computer Room, Telecommunications Rooms, Telephone Operators Room, and Antenna Headend Equipment Room
  - Exhaust fans serving Autopsy Rooms, reagent-grade Water Treatment Rooms, Orthotic Laboratory special exhaust systems, battery charging areas, flammable storage rooms, and illustration rooms (Medical Media)
  - Supply, return, and exhaust ventilating systems for Infection Isolation Rooms, Protective Environment Rooms, and exhaust fans for laboratory fume hoods and nuclear medicine areas where radioactive material is used. These systems are permitted on delayed automatic system only, and shall not be served via manual system. Some systems may be placed on the Critical Branch. Coordinate with VA.
  - Ventilation, cooling, and control equipment for electrical rooms

  - Ventilation, cooling, and control equipment for elevator machine rooms
- **Hot Water Circulatory and Steam Condensate Return Pumps:** Equipment, controls, and light fixture and receptacle near the pumps
- **Hot Water Generator:** Equipment, controls, and light fixture and receptacle near the generator
- **Kitchen:** Illumination and minimum equipment to feed patients during extended outage; freezers and refrigerators
- **Laboratory Air Compressors and Vacuum Pumps:** Equipment, controls, and light fixture and receptacle near the compressors and pumps
- Animal Ward lighting
- **Mortuary Refrigerator or Cold Room:** Refrigeration equipment and task illumination
- **Radiology Suite:** Task illumination, one automatic X-ray film processor, and one X-ray unit
- **Refrigerated Medical Storage:** Refrigeration equipment
- **Sewage Pumps:** Equipment, controls, and light fixture and receptacle near the pumps
- **Supply, Processing, and Distribution (SPD):**
  - Task illumination and selected receptacles in the following areas: core, sterile storage, non-sterile storage, preparation, and decontamination
  - One ultrasonic cleaner, one ethylene oxide gas sterilizer, one steam sterilizer, one washer sterilizer, and one gas generator
  - Equipment in warehouse areas necessary to preserve subsistence drugs and X-ray film materials that may be subjected to damage from infestation, humidity, or temperature
- **Water and Sewage Treatment Plant:** Lighting, receptacles, and equipment needed during emergency

4.6.3 ALTERNATE SOURCE OF POWER

(a) The alternate source of power shall be one or more diesel engine-driven generator sets. Provide physical space for one additional generator; paralleling switchgear shall be appropriately provisioned. Refer also to the Physical Security Design Manual.

(b) Coordinate location(s) for generator remote alarm annunciator(s) with VA. The preferred locations are in the Energy Center control room and in the Security office or Telephone Operators Room (whichever is continuously staffed).

4.7 ESSENTIAL ELECTRICAL SYSTEM FOR NURSING HOMES AND LIMITED CARE FACILITIES

The Essential Electrical System for nursing homes and limited care facilities shall comply with the Type 2 system, as defined in NFPA 99.

4.7.1 LIFE SAFETY BRANCH

Shall supply power to loads per NFPA 70 and 99.

4.7.2 CRITICAL BRANCH

(a) Shall supply power to loads per NFPA 70 and 99.

(b) In addition, connect the following items to the Critical Branch, arranged for delayed-automatic connection to the alternate power system:

- Nurse Call System
- **Patient Bedrooms:** Bathroom light, an alcove or lavatory mirror light, night light, and one receptacle per bed wall
- **Electrical Rooms and Closets:** 50% of lighting and one receptacle
- **Main Computer Room, Backup Computer Room, Telecommunications Rooms, Telephone Operators Room, and Antenna Headend Equipment Room:** All UPS equipment, lighting, and receptacles
- **Mechanical Rooms:** Task illumination and one receptacle

4.7.3 ALTERNATE SOURCE OF POWER

The alternate source of power shall consist of a diesel engine-driven generator set.

4.8 ESSENTIAL ELECTRICAL SYSTEM FOR OTHER HEALTHCARE FACILITIES

The Essential Electrical System for other healthcare facilities shall comply with the Type 3 system as defined in NFPA 99. If electrical life support equipment is required or critical care areas are present in the facility, the Essential Electrical System shall comply with the Type 1 system as defined in NFPA 99. If a Type 1 system is required, connect the functions/items listed above in SECTION 4.6 to the Essential Electrical System.

4.8.1 TYPE 3 LOADS

The Type 3 Essential Electrical System shall supply power for the task illumination and limited power service that is related to life safety, and as necessary for the safe cessation of procedures in progress.

4.8.2 ALTERNATE SOURCE OF POWER

Per NFPA 70 and 99.

4.9 ESSENTIAL ELECTRICAL SYSTEM FOR OTHER FACILITIES

4.9.1 BOILER PLANT AND ENERGY CENTER

Provide emergency power for task illumination and equipment necessary for emergency operations during an extended power outage. These buildings generally have their own diesel engine-driven generator set.

4.9.2 FIRE STATION

Provide emergency power for lighting and communication circuits necessary to sustain operation during power outages. If emergency generator power from an adjacent Boiler Plant or Energy Center is not available, provide auxiliary battery-powered lighting and communication devices.

4.10 STANDBY ELECTRICAL SYSTEM FOR MISSION CRITICAL FACILITIES

4.10.1 REQUIREMENTS

(a) A Standby Electrical System may be required to provide full power backup for Mission Critical facilities. The Standby Electrical System shall be sized for full load operation of the entire electrical system, and must be capable of sustaining operation of all electrical loads for a minimum four-day period during which the electric utility source is not available. Additional sustainability time may be required for hurricane-prone areas, arctic areas, high-seismic areas, areas vulnerable to other natural disasters, Continuity of Operation (COOP) facilities, or for other locations as specified by VA.

(b) The Standby Electrical System may be sized, if required by VA to provide power for other new or existing buildings or loads in addition to the Mission Critical facility.

4.10.2 STANDBY SOURCE OF POWER

(a) The source of power shall be one or more indoor diesel generator sets that generate at the utility service entrance voltage, typically 5kV or 15kV nominal. The point of connection shall typically be the utility service entrance point. The generators shall be rated Limited Running Time prime power, with a suggested limit of 750 hours of yearly operation at this rating.

(b) Provide physical space for one additional generator; paralleling switchgear shall be appropriately provisioned.

(c) Investigate peak shaving, cogeneration, or load interruption incentives with the serving electrical utility and submit an analysis narrative with recommendations to VA. Unless an advantageous interconnection agreement is obtained, the standby power system shall not parallel with the utility.

(d) The location of the standby power system, including switchgear and diesel fuel storage, shall comply with the Electrical Design Manual, the Physical Security Design Manual, and applicable Codes.

CHAPTER 5: ELECTRICAL POWER DISTRIBUTION

5.1 UTILITY SERVICE 5-3
5.2 PRIMARY DISTRIBUTION 5-3
5.2.1 GENERAL 5-3
5.2.2 PRIMARY SWITCHGEAR 5-3
5.2.3 PRIMARY CABLING 5-4
5.2.4 BUILDING PRIMARY-VOLTAGE DISCONNECTING MEANS 5-4
5.3 SECONDARY DISTRIBUTION 5-4
5.3.1 GENERAL 5-4
5.3.2 MEDIUM-TO-LOW VOLTAGE TRANSFORMERS 5-4
5.3.3 LOW VOLTAGE TRANSFORMERS 5-4
5.3.4 SWITCHBOARDS, SWITCHGEAR, AND MOTOR CONTROL CENTERS 5-4
5.3.5 PANELBOARDS 5-5
5.3.6 TRANSIENT VOLTAGE SURGE SUPPRESSION (TVSS) 5-5
5.3.7 LOADS FED FROM UNINTERRUPTIBLE POWER SUPPLY (UPS) 5-5
5.4 POWER MONITORING AND METERING 5-5
5.4.1 GENERAL 5-5
5.4.2 ENERGY CENTERS 5-6
5.4.3 EXISTING FACILITIES 5-6
5.5 ELECTRICAL ROOMS AND CLOSETS 5-6
5.5.1 GENERAL 5-6
5.5.2 SPACE FOR FUTURE EQUIPMENT 5-7
5.6 ELECTRICAL FACILITIES FOR OPERATING ROOMS 5-7
5.7 ELECTRICAL FACILITIES FOR ELEVATORS 5-7

This page intentionally left blank.

5.1 UTILITY SERVICE

(a) Any utility service that enters VA property to access VA service equipment shall be installed underground in a concrete-encased duct bank.

(b) Primary (medium-voltage) service is preferred. The service voltage should not exceed 15 kV. The use of higher voltages up to 35 kV shall be considered for approval by VA, if cost-effective and in compliance with the utility company's rules and regulations.

(c) For Mission Critical facilities, it is required that there are two primary utility sources, as electrically and physically separated as possible. If it is cost inhibitive or almost impossible for the Utility Power Company to meet this requirement, A/E shall inform the VA in writing of the situation, recommend solutions, and obtain VA's authorization to deviate from this requirement. Refer to the Physical Security Design Manual for more information. Provide a cost opinion for the second utility service to aid VA in determining the cost-effectiveness of this requirement. For non-Mission Critical facilities, a single primary source is adequate; however, consider two utility sources if utility reliability is in question and it can be justified as cost-effective.

Ensure that required easements for utility conductors and equipment are provided in accordance with the requirements of the serving utility.

5.2 PRIMARY DISTRIBUTION

5.2.1 GENERAL

(a) Distribution topology shall typically be primary selective, secondary radial. Primary radial systems are acceptable with VA approval for non-Mission Critical facilities.

(b) Refer to APPENDIX B, DRAWINGS for possible system topologies. These diagrams are intended for general design guidance purposes, not as a basis of design for specific projects.

(c) Refer to the Physical Security Design Manual for more information.

5.2.2 PRIMARY SWITCHGEAR

(a) Primary switchgear for Mission Critical facilities shall be located indoors, in a secure, protected location that complies with the Physical Security Design Manual. The area shall have the necessary ventilation or cooling systems to maintain indoor temperature as required for proper operation of the equipment, as well as access control. Equipment shall be located above the Base Flood Elevation.

(b) Primary switchgear for Mission Critical facilities shall be metal clad. Circuit protective devices shall be electrically operated, draw-out type circuit breakers with electronic relays for all Mission Critical facilities. Fused switch switchgear is acceptable for indoor and outdoor use at non-Mission Critical facilities.

Refer to the Physical Security Design Manual for feeder protection and routing requirements.

(c) Primary switchgear for non-Mission Critical facilities may be located outdoors, and may be pad-mounted fused-switch type.

5.2.3 PRIMARY CABLING

(a) Primary cabling shall be installed underground, in concrete-encased ductbanks. Each ductbank shall contain ducts for planned future expansion, as well as 25% additional ducts for unplanned future expansion. Route ductbanks to avoid possible locations of future building foundations or other structures. To the extent practical, normal and standby power feeders should be physically separated and not routed in the same ductbank.

(b) Consider the use of 15kV cable for 5kV projects.

5.2.4 BUILDING PRIMARY-VOLTAGE DISCONNECTING MEANS

If a building contains more than one substation, and the substations are not located in a common room, provide air switches as necessary so that all power to the building can be disconnected from a common location.

5.3 SECONDARY DISTRIBUTION

5.3.1 GENERAL

Healthcare, Research, Clinical and Ambulatory Care Facilities, and Essential Buildings with l000 kVA or Larger Demand Load: The total building load (calculated demand kVA plus future growth) shall be served by multiple single-ended unit substations. Low-voltage feeders between buildings shall be underground.

5.3.2 MEDIUM-TO-LOW VOLTAGE TRANSFORMERS

(a) The maximum transformer size for 208Y/120V systems shall be 750kVA. The maximum transformer size for 480Y/277V systems shall be 2500kVA. Transformers may be dry or liquid-filled.

(b) Outdoor pad-mounted transformers are permitted for non-Mission Critical facilities.

5.3.3 LOW VOLTAGE TRANSFORMERS

The A/E shall consider harmonic-mitigating dry-type transformers to serve building areas rich in non-linear loads.

5.3.4 SWITCHBOARDS, SWITCHGEAR, AND MOTOR CONTROL CENTERS

(a) Provide switchboards, switchgear, and motor control centers with 25% space for additional overcurrent protective devices. Horizontal bussing should be fully rated for length of switchboard.

(b) As a guideline, power circuit breakers are preferred for 1600A and above; molded case circuit breakers for below 1600A. Select electronic trip functions for low-voltage circuit breakers so as to achieve selective coordination.

5.3.5 PANELBOARDS

Provide panelboards with 30% space for additional circuit breakers.

5.3.6 TRANSIENT VOLTAGE SURGE SUPPRESSION (TVSS)

(a) Transient voltage surge suppression (TVSS) is mandatory for buildings equipped with a lightning protection system.

(b) Integrated, cascaded TVSS is mandatory at all Mission Critical buildings: at the highest secondary voltage ("service entrance") level, at downstream panelboards that serve sensitive electronic equipment, and at individual receptacle locations by the use of TVSS receptacles. TVSS is recommended at these locations in non-Mission-Critical buildings.

5.3.7 LOADS FED FROM UNINTERRUPTIBLE POWER SUPPLY (UPS)

(a) UPS equipment is necessary for electronic equipment or any equipment that performs critical functions and requires continuous regulated power for operation.

(b) At a minimum, the following loads should be protected by UPS equipment: Main Computer Room equipment, Telephone Equipment Room equipment, telecommunications equipment, HVAC control equipment, and any other mission-essential equipment necessary for continuity of service that is not tolerant of the transfer time between utility and generator power.

(c) UPS equipment shall be arranged so that the required runtime is achieved by paralleled combinations of shorter runtime battery cabinets.

5.4 POWER MONITORING AND METERING

5.4.1 GENERAL

(a) Power monitoring and metering are in addition to utility metering.

(b) At a minimum, power monitoring and metering equipment shall be provided for both normal and essential electrical systems: for medium-voltage switchgear on each main and distribution feeder circuit breaker, unit substation transformer secondary low-voltage main circuit breakers, generator paralleling switchboards, plug-in busways, and low-voltage switchboards and major distribution panelboards. The power monitoring and metering system shall have the capability of communication with a VA-centralized remote metering station via a data backbone.

(c) At a minimum, power monitoring and metering equipment shall record, store, and trend voltage, current, kW, kWh, kVA, kVAR, power factor, as well as voltage and current total harmonic distortion.

5.4.2 ENERGY CENTERS

(a) Provide power monitoring and metering for chilled water plants and boiler plants.

(b) If medium-voltage chillers are used, install power monitoring equipment for each chiller.

5.4.3 EXISTING FACILITIES

If feasible, renovation projects shall install power monitoring equipment on any major electrical equipment directly affected or modified by the renovation.

5.5 ELECTRICAL ROOMS AND CLOSETS

5.5.1 GENERAL

(a) An electrical room is an area in a building or structure which contains one or more of the following: medium-voltage switchgear, medium-to-low-voltage transformers, low voltage transformers, low-voltage distribution equipment, and panelboards. An electrical closet is an area in a building that contains one or more of the following: low voltage transformers and low-voltage distribution and branch circuit panelboards.

(b) The location, protection, and access to electrical room and closets shall comply with the Physical Security Design Manual.

(c) Electrical rooms shall be located above the Base Flood Elevation. Electrical rooms shall not be located beneath toilets, showers, laboratories, kitchens, sinks, open courtyards, planters, roof drain leaders, or other areas where water service is provided.

(d) Electrical equipment spaces shall be designed to allow maintenance equipment access, and to facilitate equipment replacement without significant demolition and reconstruction.

(e) Any pipe or duct system foreign to the electrical installation shall not enter or pass through an electrical space. The A/E shall ensure that foreign piping such as water pipes, steam pipes, medical gas pipes, sanitary waste pipes, roof drains, A/C ducts, and other unrelated piping systems containing liquids or gases are not installed, nor pass through, electrical rooms. Sprinkler piping shall not be routed through electrical rooms, unless it serves to protect the electrical installation.

(f) Electrical spaces shall have the necessary mechanical ventilation or cooling system to maintain the indoor temperature range required for proper operation of the equipment.

(g) No telecommunications equipment, other than telecommunications outlets, shall be placed within electrical rooms.

(h) Provide appropriate construction for the type of transformer(s) installed.

(i) Electrical closets shall stack vertically, and shall not be further than 150 ft [46 M] apart, to limit maximum 120V circuit length to approximately 75 ft [23 M].

5.5.2 SPACE FOR FUTURE EQUIPMENT

(a) Rooms that contain freestanding electrical equipment shall be sized so that sufficient space is provided to add one additional section to each unit of freestanding equipment. Provide extended pad space and spare conduits to facilitate future installation of equipment and conductors. Spare space shall be indicated on drawings.

(b) Electrical closets shall have 20% spare wall space for future installation of similar electrical equipment.

5.6 ELECTRICAL FACILITIES FOR OPERATING ROOMS

(a) Refer to Design Guides (PG-18-12), Surgical Series.

(b) VA no longer installs new isolated power systems. Refer to VHA Directive 2008-011, which can be accessed from the VA TIL website.

5.7 ELECTRICAL FACILITIES FOR ELEVATORS

Refer to Transport Systems Design Manual for Hospital Projects. This manual specifies power, lighting, and telecommunications requirements for elevator machine rooms and hoistways.

This page intentionally left blank.

CHAPTER 6: LIGHTING

6.1 GENERAL 6-3
6.2 STANDARDS 6-3
6.3 LIGHTING CALCULATIONS 6-3
6.4 LIGHTING FIXTURE SCHEDULE 6-3
6.5 DESIGN APPROACH 6-3
6.5.1 DEVIATIONS 6-3
6.5.2 LIGHTING SCHEMES 6-4
6.6 LIGHT SOURCES 6-4
6.6.1 STANDARDIZATION OF SOURCES 6-4
6.6.2 FLUORESCENT 6-4
6.6.3 METAL HALIDE 6-4
6.6.4 LED 6-4
6.7 BALLASTS 6-4
6.8 FIXTURES 6-5
6.9 CONTROL 6-5
6.9.1 GENERAL 6-5
6.9.2 INTERIOR LIGHTING CONTROL 6-5
6.9.3 EXTERIOR LIGHTING CONTROL 6-6
6.10 INTERIOR LIGHTING 6-6
6.10.1 GENERAL 6-6
6.10.2 SPECIFIC APPLICATIONS 6-6
6.10.3 BED ROOM LIGHTING 6-7
6.10.3.1 General Lighting 6-7
6.10.3.2 Bed Lights 6-7
6.10.3.3 Vestibule Lighting 6-8
6.10.3.4 Service Alcove 6-8
6.10.3.5 Bed Room Lavatory 6-8
6.10.3.6 Night Light 6-8
6.10.3.7 Toilet/Bathroom 6-8
6.10.3.8 Closets Or Lockers 6-8
6.10.4 CORRIDOR LIGHTING IN NURSING HOMES AND GERIATRIC AREAS (NOT DOMICILIARY) 6-9
6.10.5 EYE EXAMINATION ROOMS 6-9
6.10.6 HEMODIALYSIS EXAM 6-9
6.10.7 INTERSTITIAL SPACES 6-9
6.11 KITCHEN HOOD 6-10
6.11.1 POOL LIGHTING 6-10
6.11.2 ANIMAL WARD 6-10
6.11.3 PARKING GARAGES 6-10
6.11.4 ELEVATOR HOISTWAYS 6-11
6.12 EXTERIOR LIGHTING 6-11
6.12.1 GENERAL 6-11
6.12.2 EXISTING SITES 6-11
6.12.3 OBSTRUCTION LIGHTING 6-11
6.12.4 PARKING LOTS 6-11

This page intentionally left blank.

6.1 GENERAL

This chapter covers the lighting requirements for VA facilities.

6.2 STANDARDS

Use IESNA standards for general guidance for a lighting design, and for lighting situations not covered by this chapter. Allowed Lighting Power Density (LPD) figures shall follow ASHRAE 90.1.

6.3 LIGHTING CALCULATIONS

(a) Perform all lighting calculations based on the illumination levels in APPENDIX A, "ILLUMINATION LEVELS." Where illumination levels are not provided, refer to the latest edition of IESNA Lighting Handbook for specific applications.

(b) Calculations are not part of the construction contract documents. A/E shall provide hard copies and electronic files of the calculations to VA for review and comment during design phase. Calculations, at a minimum, shall include room name, room number, fixture type chosen for the room, number and type of lamps to be used in the room, required illumination level (VA or IESNA), calculated illumination level, and all light loss and reflectance assumptions used.

(c) Calculations for most interior spaces may be performed using the zonal cavity or point-by-point methods. Perform and submit point-by-point calculations for areas of greater architectural or luminous complexity.

(d) Calculations for exterior spaces, including parking structures, shall be point by point.

(e) Calculations shall include demonstrated compliance with energy conservation measures as outlined in CHAPTER 1 of this manual.

6.4 LIGHTING FIXTURE SCHEDULE

Provide a Lighting Fixture Schedule on the drawings, separate from the specifications. The Lighting Fixture Schedule shall state details such as fixture designations used on the plans, lighting fixture descriptions, exact lamp type, lamp quantity, wattage per lamp including ballast, etc.

6.5 DESIGN APPROACH

6.5.1 DEVIATIONS

Whenever deviations from VA Standards and/or Design Guides occur, the A/E shall make recommendations applicable to the specific project.

6.5.2 LIGHTING SCHEMES

At least two proposed lighting schemes for special or architecturally unique areas (Visitor Lobbies, Cafeterias, Atriums, etc.) shall be provided. Layouts shall vary in design and materials such as fixture layout, fixture type, lamps, louvers, reflectors, etc, to enable VA to select the best scheme to suit project goals and budget requirements.

6.6 LIGHT SOURCES

6.6.1 STANDARDIZATION OF SOURCES

Standardize lamp types across fixture types to limit the number of different lamp types and wattages used.

6.6.2 FLUORESCENT

(a) Linear 2-foot and 4-foot T8 fluorescent lamps with CRI>70 and rated lifespan of 20,000 hours are the preferred interior lighting source. T5 2-foot and 4-foot double-ended linear sources are allowed for indoor locations. Compact fluorescent lamps in twin-, tri-, and quad-tube T4 configurations are allowed.

(b) Color-corrected lamps with a CRI of 85 or above and correlated color temperature between 5000 degrees K and 6000 degrees K are required in the following areas:

- Over ICU beds
- Over CCU beds
- Over Recovery Room beds
- Over Life Support beds
- Over Observation and Treatment beds
- Electromyographic Rooms
- Autopsy (Necropsy) Rooms
- Surgery Rooms (color shall match that of the surgical light)
- Dental Rooms (Examination, Oral Hygiene, Oral Surgery, Recovery, Labs, Treatment, and X-ray)

6.6.3 METAL HALIDE

Use pulse-start ballasts, and pulse-start lamps with glass or ceramic arc tubes. Probe-start ballasts and lamps are not acceptable.

6.6.4 LED

LED lighting is allowed for task-focused applications, such as surgery, medical exam, or night lighting, on a project-specific basis.

6.7 BALLASTS

Electronic high-frequency type ballasts shall be used for all linear fluorescent lamps. Low-frequency hybrid electronic-electromagnetic ballasts that operate lamps at 60Hz may be considered for surgery rooms, critical care units, and animal labs.

6.8 FIXTURES

(a) Select fixtures and light sources with long operating lives; which utilize controlling elements (lenses, louvers, reflectors, etc.) designed to provide the best utilization of emitted light at the task location; are appropriate for the ambient temperature; and are not prone to dirt accumulation.

(b) In high ceiling areas, locate fixtures for maintenance access or provide access for maintenance equipment.

6.9 CONTROL

6.9.1 GENERAL

(a) Energy consumption constraints dictate the installation of automatic lighting controls for both interior and exterior lighting. The A/E shall select and design master and room-specific lighting control systems that comply with energy codes and requirements; that respond to daylight harvesting; that utilize the correct sensor and sensor location for the controlled space; that are compatible with the controlled ballasts and lamps; and that are responsive to the occupant's desire not to feel "over-controlled."

(b) For projects that employ indoor and/or outdoor occupancy and light sensors, provide a schedule on the drawings for room or area name, sensor type (i.e., ultrasonic, infrared, dual-technology, photoelectric, etc.), light level, detection coverage, interface with automatic lighting control and building HVAC systems, and any other control parameters necessary to indicate the lighting control requirement.

6.9.2 INTERIOR LIGHTING CONTROL

(a) For fixtures with three, four, or more lamps, switch the lamps symmetrically for two (or three) lighting levels.

(b) In large administrative areas along the windows, provide bi-level switching for lighting fixtures located within 15 ft [4.6 M] of the windows, or provide daylight harvesting control system for lighting fixtures within this area.

(c) Where multiple room entrances are not immediately adjacent to each other, provide three- or four-way switching.

(d) Utilize low-voltage switching in large areas with multiple entrances, such as large auditoriums or meeting centers over 10,000 square feet [3048 sq M].

(e) Utilize low-voltage switching in large areas to control illumination separately at logical work station locations, such as General Laboratories, Pharmacy areas, shops, etc.

(f) Install dual technology occupant sensor (ultrasonic/infrared) or vacancy sensor controls for room lights in Public Toilets, Conference Rooms, Day Rooms, Examination Rooms, and

similar spaces. Occupancy sensor controls shall be considered for all non-emergency egress lighting fixtures located in non-patient care corridors.

(g) Bed ward corridor lighting shall be controlled from the Nurse Station.

(h) In relatively large, infrequently used rooms such as crawl spaces, pipe spaces, interstitial spaces, attics, etc., where lights can be left on unnoticed, install a pilot light outside the area to indicate when the lights are on.

(i) Lighting control panels with astronomical timeclocks shall be used in non-patient areas such as administrative areas, animal lab areas, and warehouses. By-pass switches variable from ½ to 2 hours shall be provided as part of the entire lighting control system. By-pass switches shall be clearly marked for the affected area.

6.9.3 EXTERIOR LIGHTING CONTROL

Exterior lighting shall typically be controlled by photoelectric controls integrated with each fixture. Selected circuits may also be controlled by astronomical time switches if approved by the VISN Safety Officer.

6.10 INTERIOR LIGHTING

6.10.1 GENERAL

Use VA illumination levels as design values, not as minima. Select the number of lamps and the fixture type according to the recommended finishes specified in each area to ensure the intended lighting levels.

6.10.2 SPECIFIC APPLICATIONS

(a) Use semi-iridescent parabolic louver fixtures in offices, nurse stations, and similar spaces where CRT equipment is commonly used.

(b) In offices, examination rooms, and similar spaces with non-fixed task locations which require 30 fc or greater, position ends of fluorescent fixtures (or rows) within 2.5 ft [0.762 M] of abutting walls. Select fixtures and lamp quantities to provide the required lighting level.

(c) Eliminate lighting fixtures from established general lighting layouts designated as non-task areas, such as aisle space or other traffic locations in front of doorways. Eliminate the fixture for rooms over 100 sq ft [9 sq M] if a door swing arc intercepts a lighting fixture on the floor plans.

(d) Instead of using the ceiling system, run continuous rows of fluorescent fixtures centered over the front edge of wall-mounted benches and crosswise to double-sided benches in laboratories, pharmacies, shops, and similar areas with work tables and benches. Eliminate or reduce the number of fixtures over open floor areas.

(e) Provide fluorescent over-mirror lights in all toilets. The fixture length does not need to be confined to the width of the mirror. Size the fixture to double its function to include general illumination in the case of small toilets. If a bathtub or shower is included, install a ceiling light.

(f) In storage, shelf, and stack areas, mount fixtures in rows lengthwise over aisles between rows of shelves to make the most efficient use of the lighting. In areas over 400 sq ft [37 sq M], consider running continuous fixture rows at 45 degrees to the general room dimensions, coordinating the layout with the ceiling system design.

(g) Decorative lighting for lobbies, waiting rooms, patios, auditoriums, chapels, etc., shall use energy-efficient light sources. Decorative lighting power consumption shall be included in the calculations for the allowed lighting power density for energy saving purposes.

(h) Patient-area corridors shall be illuminated with lensed or indirect lighting fixtures.

(i) For public toilets with more than three toilet stalls, at least one fluorescent lighting fixture shall be connected to the Critical Emergency or Life Safety Branch of the Essential Electrical System. In areas where the Essential Electrical System is not available, provide at least one ceiling/wall-mounted emergency battery lighting unit – maintenance free - with dual head.

6.10.3 BED ROOM LIGHTING

6.10.3.1 General Lighting

(a) Not required for single-bed rooms; provided by bed light, uplight, and spill light from vestibule lighting.

(b) In rooms with two or more beds, provide a separate fluorescent fixture near the open floor area (outside curtain tracks) or other fixture type suitable to room conditions. If the center floor area is not available, use fixtures on each side of the obstruction. Control with switch inside corridor door.

6.10.3.2 Bed Lights

(a) 120V fluorescent wall bracket fixture with two lamps for uplight and two lamps for downlight for reading. The fixture shall be totally patient-controlled with a four-position pull-cord switch (up-down-both-off). **Exception:** Single-bed rooms shall have uplight controlled from switch inside room entrance.

(b) In bedrooms with lavatories, provide a pull-cord for total patient control. See Section 6.10.3.5, Bedroom Lavatory, below.

(c) Fluorescent fixture parallel to and centered over each bed. Control from switch in PBPU (or bedwall when PBPU is not employed). Provide label for the switch with ¼ in [6 mm] engraved letters "OVERBED LIGHT" on PBPU or the wall plate.

(d) Intensive Care Units: Fluorescent fixture parallel to and centered over each bed, controlled by combination dimmer/switch outside of door to bed cubicle or Isolation Room. Include 3-way switch at vicinity of Nurse Station.

(e) Domiciliary and Mental Health and Behavioral Nursing Units – Over-Bed: Over-bed and task lighting is not required.

6.10.3.3 Vestibule Lighting

Fluorescent fixture for single bed and multi-bed rooms located at entrance to bedroom, controlled by switch inside corridor door.

6.10.3.4 Service Alcove

Fluorescent wall bracket fixture over mirror, controlled by switch inside corridor door or adjacent to alcove, as appropriate.

6.10.3.5 Bed Room Lavatory

Fluorescent wall bracket fixture over mirror, controlled by switch inside corridor door. Provide 3-way switch near lavatory when lavatory is more than 10 ft [3 M] from the corridor door.

6.10.3.6 Night Light

(a) Fluorescent or LED fixture, wall-mounted 18 in [450 mm] above the floor and positioned to primarily illuminate the circulation area between the bed(s) and the toilet or service alcove. Control locally by switch. Control night light circuit(s) through simple 24-hour master timer, or automatic lighting control system. **Exception:** In ICU cubicles, control with wall switch at entrance to the cubicle and eliminate the local switch.

(b) Intensive Care Units: Fluorescent or LED fixture, wall mounted 18 in [450 mm] above the floor and positioned to illuminate the primary circulation area of the bed cubicle or Isolation Room. Control with switch inside the bed cubicle or Isolation Room door.

6.10.3.7 Toilet/Bathroom

Fluorescent fixture wall-mounted over mirror. Where bathtub or shower is included, use a fluorescent ceiling light in addition to the mirror light. A wet-location shower light may also be required. Control with switch(es) inside the room door(s).

6.10.3.8 Closets Or Lockers

Place fixtures appropriately for adequate lighting in closets and lockers.

6.10.4 CORRIDOR LIGHTING IN NURSING HOMES AND GERIATRIC AREAS (NOT DOMICILIARY)

Design lighting to minimize both direct and indirect glare in the eyes of the elderly and visually impaired. Use appropriate indirect fluorescent lighting that is efficient, easily serviceable, and does not collect excessive amounts of dust.

6.10.5 EYE EXAMINATION ROOMS

Provide fluorescent lighting fixtures with dimming ballasts and the following controls in each Eye Exam Room in the Eye Clinic:

- One 3-way dimmer switch at the strike side of the entrance door.
- One 3-way dimmer switch on the side wall near the expected location of the projection screen.
- One 4-way floor switch, foot-operated with approved rubber-insulated cable, approximately the diagonal length of the room exposed on the floor. Extend this switch from a recessed junction box mounted 6 in [150 mm] above the finished floor to clear the base molding.

6.10.6 HEMODIALYSIS EXAM

In addition to a fluorescent fixture (two-level switch) over each patient lounge bed, provide a compact fluorescent downlight over both sides of the lounge bed. Control by dimmer control at the bed wall.

6.10.7 INTERSTITIAL SPACES

(a) Install fluorescent strip lights equipped with wire guards.

(b) Spaces with walkways or catwalks only:
- Locate fixtures appropriately along catwalks and walkways.
- Select a few appropriate fixtures to be on an unswitched emergency circuit.
- Switch all non-emergency powered fixtures from all access doors to the space. Long catwalk runs should be separately switched.

(c) Spaces with "walk-on" floors:
- Provide general lighting to avoid piping, ductwork, and equipment, with emphasis on walkways.
- Select a few appropriate fixtures to power with an un-switched emergency circuit.
- Switch all non-emergency powered fixtures locally by bays (or groups) and at each access door. Walkway lights shall be switched at all related access doors. Use low-voltage remote control switching to extinguish all non-emergency general lighting from every access door to the space.

(d) Provide a small red pilot light over the outside of each access door to the interstitial space to indicate when the switched lighting is on.

(e) Locate exit lights inside the access door to the interstitial space at a point 4 ft [1.2 M] above the finished floor and approximately 6 in [150 mm] horizontally from the access door frame. Provide exit lights with metal stencil face type to minimize breakage. Provide additional directional signs, if the path or route to the access door(s) is particularly circuitous.

(f) Connect all or part of the lighting in Equipment Rooms at the interstitial floor level on emergency circuits. In the smaller Equipment Rooms, the emergency lighting shall be switched at the doors as with all other fixtures. In large Equipment Rooms, a few select emergency fixtures shall be un-switched, and the rest switched from inside the door(s) and monitored by pilot light outside the door(s).

6.11 KITCHEN HOOD

Control fixtures integral with hoods to operate when the hood exhaust system operates.

6.11.1 POOL LIGHTING

(a) The lighting of therapeutic pools shall minimize glare on the water. Use fluorescent or metal halide sources in moisture-resistant lighting fixtures mounted above, or at a high angle, as viewed from the pool. Do not mount lighting fixtures directly over the pool unless they can be serviced from above.

(b) Provide underwater lighting from low-voltage fixtures in wet niches in pool walls. Underwater lights shall supplement the spill light from the overhead apron lighting to provide clear visibility of persons in the pool.

6.11.2 ANIMAL WARD

(a) Design lighting systems in accordance with "Guide for the Care and Use of Laboratory Animals," published by the Institute of Laboratory Animals Resources.

(b) Provide uniformly spaced rows of enclosed and gasketed fluorescent fixtures. Rows are to be over both cage and aisle locations. Locate a similar type fixture over the sink/counter area and control with a separate wall switch.

(c) Animal housing room lighting shall be controlled by a lighting control panel with astronomical time clock and by-pass switches variable from ½ to 2 hours. Mount all controls on wall outside of the room door.

6.11.3 PARKING GARAGES

Criteria recommended in the latest edition of IESNA Guideline for Security Lighting for People, Property, and Public Spaces shall govern the lighting design. Provide suitable and cost-efficient lighting such as fluorescent, high pressure sodium, or metal halide. Do not use low-pressure sodium. Lighting fixtures shall limit spill light and excessive glare to adjacent private and public property.

6.11.4 ELEVATOR HOISTWAYS

Refer to the Automatic Transport Design Manual for Hospital Projects.

6.12 EXTERIOR LIGHTING

6.12.1 GENERAL

(a) Generally, exterior lighting shall comply with energy requirements, and with Dark Sky principles. When required by VA, exterior lighting designs shall meet the requirements of local outdoor lighting codes. Criteria recommended in the IESNA Guideline for Security Lighting for People, Property, and Public Spaces (latest edition) shall govern the lighting design. Refer also to APPENDIX A.

(b) Exterior lighting shall be coordinated with physical security, CCTV, and landscaping requirements.

(c) White light sources are preferred near buildings. Sodium lighting may be used for parking areas. Exterior decorative lighting shall not be used for general illumination.

(d) Minimize direct light onto windows; direct and reflective (disabling) glare; and spill illumination onto adjacent properties (use house-side shields when adjacent to residential property).

(e) Include conduits and mounting provisions in pole bases and on poles, for camera or other security equipment as required.

(f) Provide complete pole base details on plans. Details shall indicate complete structural and electrical elements such as rebars, type of concrete, anchors, conduits, handholes, etc. Structural elements shall be designed by a licensed structural engineer to meet all local structural conditions, such as seismic zone, soils, wind loading, etc.

6.12.2 EXISTING SITES

At existing sites, new fixtures, and sources shall match the existing exterior fixtures. Provide details and/or manufacturer's name and catalog number, if possible.

6.12.3 OBSTRUCTION LIGHTING

Where required, implement obstruction lighting by the latest edition of Federal Aviation Administration (F.A.A.) Advisory Circular AC 70/7460-1K, Obstruction Marking and Lighting.

6.12.4 PARKING LOTS

(a) Illuminate large parking lots with pole-mounted cutoff fixtures, using alternate circuiting. High-wattage pole- or building-mounted floodlights are discouraged. The maximum height of a pole shall be 40 ft [12 M]. Coordinate locations with snow removal means, and hardscape and landscape features, including projected tree growth. A combination of

exterior-wall-mounted and pole-mounted fixtures may be used for illumination of small parking lots.

(b) Provide minimum maintained illumination levels for bicycle and pedestrian pathways, vehicle routes, parking lots, wayfinding, signage, pedestrian entrances, and building surrounds and services to provide safety and security.

(c) If possible, locate poles in islands or landscaped areas away from vehicles. If not possible, extend their concrete bases 30 in [760 mm] above finished grade.

(d) Match existing pole/fixture/source styles in renovation or addition projects.

(e) Consider corrosion protection when selecting materials and finishes.

This page intentionally left blank.

CHAPTER 7: TELECOMMUNICATIONS SYSTEMS

TELECOMMUNICATIONS CABLE PATHWAYS, WIRING AND CABLES, AND INFRASTRUCTURE PLANT; SPECIAL TELECOMMUNICATIONS SYSTEMS

Note: *Chapters 7 and 8 contain like references, guidelines and instructions that refer to each specific system/function. These "like" descriptions have been cross-referenced throughout both chapters to reduce redundancy. Additionally, each chapter contains acronyms that pertain to both; these have been combined in the beginning of Chapter 7.*

7.1 GENERAL 7-3
7.2 GENERAL REQUIREMENTS 7-3
7.2.1 TELECOMMUNICATIONS INFRASTRUCTURE PLANT (TIP) 7-3
7.2.2 TIP FUNCTIONAL REQUIREMENTS 7-4
7.3 CONDUITS AND BOXES 7-4
7.3.1 GENERAL 7-4
7.3.2 MINIMUM SIZE 7-4
7.3.3 INTERCONNECTING CONDUIT REQUIREMENTS 7-4
7.3.4 HORIZONTAL CONDUITS 7-6
7.3.5 PARTITIONED CABLE TRAYS AND OPEN WIREWAYS 7-6
7.3.6 TELECOMMUNICATIONS CABLE DUCTS UNDER CELLULAR FLOORS 7-7
7.3.7 VERTICAL RISERS 7-7
7.4 TELECOMMUNICATIONS OUTLETS 7-7
7.5 DRAWINGS 7-8
7.6 WIRES AND CABLES 7-9
7.7 SPECIAL SYSTEMS SPECIFIC REQUIREMENTS 7-9
7.7.1 GENERAL 7-9
7.7.2 NURSE CALL 7-9
7.7.3 PUBLIC ADDRESS (PA) 7-10
7.7.4 INTERCOMMUNICATION (IC) 7-10
7.7.5 MASTER ANTENNA TELEVISION (MATV) 7-10
7.7.6 MOTION INTRUSION DETECTION (MID) 7-11
7.7.7 CLOSED CIRCUIT TELEVISION (CCTV) 7-11
7.7.8 ELECTRONIC ACCESS AND DOOR CONTROL (EADR) 7-11
7.7.9 RADIO PAGING SYSTEM (RPS) 7-11
7.7.10 PATIENT/STAFF ANNUNCIATOR/LOCATOR SYSTEM (PAL) 7-11
7.7.11 TWO-WAY RADIO SYSTEM (TRS) 7-12
7.7.12 DURESS ALARM AND EMERGENCY NOTIFICATION SYSTEM (ENS) 7-12
7.7.13 SECURITY MANAGEMENT AND CONTROL, AND CENTRALIZED POLICE SECURITY MANAGEMENT SYSTEMS (SMS) 7-12
7.7.14 PATIENT ANNUNCIATOR/LOCATOR SYSTEM (PAS) 7-12

This page intentionally left blank.

7.1 GENERAL

(a) This section covers requirements for cable pathways and raceways, wiring and cables, Telecommunications Infrastructure Plant (TIP, or backbone), and special telecommunications systems (hereinafter referred to as "Special Systems") for all VA facilities.

(b) Cable pathways, raceways, wiring, and cables comprise the TIP. The TIP shall incorporate all telephone, data, and Special Systems cables, at a minimum.

(c) Special Systems are identified as those telecommunications systems that are not telephone (aka "voice"), data, or fire alarm (or related functions).

(d) Contact VA Telecommunications Engineering (TE-005OP2H3) – 301-734-0376 for technical assistance with systems design and preparation of construction documents and proof of performance testing and VA certification.

7.2 GENERAL REQUIREMENTS

7.2.1 TELECOMMUNICATIONS INFRASTRUCTURE PLANT (TIP)

VA IDENTIFIED AS "REAL PROPERTY" OF A FACILITY, BUILDING, OR PROJECT

(a) Provide TIP system(s) and interfaces/interconnections and wire management functions as required. In renovation projects, the TIP shall be compatible with and extend the facility's existing TIP. Refer to Master Specifications sections 27 10 00, 27 11 00, and 27 15 00 for specific technical, installation, and Service Category 5E (or greater) requirements.

(b) All inside TIP (backbone) cabling between the Main Computer Room and the Telecommunications Rooms shall be installed in conduit.

(c) All horizontal TIP wire and cabling shall be installed in a raceway system, which may consist of a mixture of conduits, enclosed cable trays, open wireways, covered cable ducts, Nationally Recognized Testing Laboratory (NRTL)-approved partitioned communications wireways, and/or cable ladders, except as specifically disallowed by TE-005OP2H3.

(d) TIP cabling may be installed above suspended ceilings using cable hangers or wire basket cable trays when specifically approved on a case by case basis, in writing, by TE-005OP3H2. Minimum size of wire basket tray shall be 6 in [150 mm] wide, with 1.5 in [40 mm] high sidewalls, with internal partitions or approved cable bundling.

(e) In hard ceiling areas, a raceway system, which may consist of a mixture of conduits and enclosed cable trays, is required.

(f) TIP wires or cables may be provided inside gypboard walls in flexible conduit, as specifically approved in writing by the Facility's OIT Chief or Chief Engineer for each particular location.

7.2.2 TIP FUNCTIONAL REQUIREMENTS

(a) All TIP construction documents shall be reviewed and technically approved by TE-005OP2H3 before being released for bidding and construction.

(b) The term "provide," where used herein, shall mean the same as "designed, engineered, furnished, installed, tested, guaranteed, and certified by the contractor."

7.3 CONDUITS AND BOXES

7.3.1 GENERAL

For system conduits, junction boxes, routing, termination, risers, horizontal runs, sizing, etc., follow industry-standard requirements.

7.3.2 MINIMUM SIZE

(a) Conduit from outlet to above ceiling should be a minimum of one inch [25 mm].

(b) Conduit runs outside buildings shall be equipped with a pullbox (inside) or manhole (outside) after two 90-degree bends or an accumulation of 120-degrees of total pathway deviations from a straight line between each point of access.

(c) Conduits outside of buildings shall be waterproof and shall not exceed 400 ft [122 M] between manholes or pullboxes (not counting bend or traverse loss).

(d) Conduit runs shall be routed to the nearest wireway, cable tray, interface cabinet, or rack, when installed in interstitial spaces.

7.3.3 INTERCONNECTING CONDUIT REQUIREMENTS

(a) The A/E may refer to the one-line drawing of suggested telecommunications topology in APPENDIX B for a graphical representation. The following table identifies the minimum conduit requirements for the TIP infrastructure:

Table 7-1 Conduit Requirements

LOCATION A	LOCATION B	CONDUIT TYPE	QTY	SIZE
Entrance A from street - Provider 1	Demarc (Demarcation) Room A	Direct burial PVC or PE	5*	4 in [100 mm]
Entrance B from street - Provider 2	Demarc Room B (if provided	Direct burial PVC or PE	5*	4 in [100 mm]
Demarc Room A	Main Computer Room (MCR)	EMT	10***	4 in [100 mm]
Demarc Room B (if provided)	MCR	EMT	10***	4 in [100 mm]
Demarc Room A	Antenna Headend Equipment Room	EMT	1	4 in [100 mm] with four 1 in [25 mm] innerducts
Demarc Room B (if provided)	Antenna Headend Equipment Room	EMT	1	4 in [100 mm] with four 1 in [25 mm] innerducts
MCR	Each TR Vertical Riser Stack on the MCR Floor	EMT	3 x Number of TRs in stack	4 in [100 mm]
MCR	Backup Computer Room (if provided)	EMT	6*****	4 in [100 mm]
MCR	Telephone Operators Room (TCR)	EMT	1	4 in [100 mm]
MCR	Police Control Room (PCR)	EMT	1	4 in [100 mm] with four 1 in [25 mm] innerducts
MCR	Antenna Equipment Headend Room	EMT	2	4 in [50 mm]
MCR	Engineering Control Center (ECC)	EMT	1	4 in” [100 mm] with four 1 in [25 mm] innerducts
MCR	Emergency Management Control Room (EMCR)	EMT	1	4 in [100 mm] with four 1 in [25 mm] innerducts
Between TRs on same floor	Between TRs on same floor	EMT	Cable Tray	4 in [100 mm] deep x width as required
Stacked TRs	Next stacked TRs	EMT (sleeves)	3 x Number of TRs above	6 in [140 mm]
Antenna Headend Equipment Room	Roof or access to antennas	EMT (weather proofed)	2	3 in [75 mm]
Antenna Headend Equipment Room	Nearest TR	EMT	2	4 in [100 mm]
Antenna Headend Equipment Room	PCR	EMT	1	4 in [100 mm] with four 1 in [25 mm] innerducts
Antenna Headend Equipment Room	ECR	EMT	1	4 in [100 mm] with four 1 in [25 mm] innerducts
Antenna Headend Equipment Room	EMCR	EMT	1	4 in [100 mm] with four 1 in [25 mm] innerducts

(b) Conduit Use / Designation:

* - One each voice, one each data, one each special systems, one each security/emergency systems, one each spare

** - Two each voice, one each spare

*** - 10 conduits from each Demarc Room to the Main Computer Room

**** - One each Special Communications, one each Security/ Emergency systems.

***** - Two each voice, one each spare

****** - One each for OIT; two each for FMS. The single OIT conduit per TR shall contain three 1-inch innerducts (one each for 12 strands single mode fiber; one each for 24 strands laser optimized multi-mode fiber; one each for 12 strands multi-mode fiber) and one 100 pair copper (0.74 in OD). One FMS OIT conduit per TR shall contain four 1-inch innerducts (one each for 12 strands single mode fiber, one each for 24 strands laser optimized multi-mode fiber, one each for 12 strands multi-mode fiber, and one each spare). The other FMS conduit shall be spare.

(c) Coordinate all conduit entrance locations with the facility staff and obtain written technical approval from TE-005OP2H3.

7.3.4 HORIZONTAL CONDUITS

(a) Surface metal raceways are not acceptable and shall not be approved for wire or cable on the outside of walls.

(b) Conduit runs to and/or from backboards in a Telecommunications Room or interstitial space shall terminate at the top or bottom of the backboard. Conduits shall not cover any portion of the backboard.

(c) Horizontal runs of enclosed wireways are not acceptable for above-ceiling applications. However, enclosed wireways are required in interstitial spaces.

7.3.5 PARTITIONED CABLE TRAYS AND OPEN WIREWAYS

(a) Unless otherwise specified, install all system TIP wiring and cabling in approved telecommunications partitioned cable trays or open wireways, as specifically approved by TE-005OP2H3.

(b) When permitted by NFPA, open wireways or partitioned cable trays may contain multiple telecommunications systems of like service. These combinations must be approved by TE-005OP2H3 prior to the system design. The wireways or partitioned cable trays must provide mechanical protection for the cables, and allow separation of the telecommunications cables by system.

(c) Open wireways or partitioned cable trays may be mounted vertically if they are attached to solid building structures and the wires or cables are protected, secured from falling from the tray, and separated from other systems.

(d) TIP wire and cable runs that are routed from open wireways and/or cable trays in interstitial spaces to the nearest vertically stacked TR, Antenna Headend Equipment Room, or telecommunications outlet, shall be enclosed in conduit. However, cable racks or ladders, installed from the TRs, may be used above the ceiling for station cable installation in non-critical areas as long as each location's egress and ingress signal processing and radiation and electromagnetic interference (EMI) properties are maintained as described herein and approved by TE-005OP2H3 prior to final system design.

(e) The use of cable racks or ladders is not allowed for Special Systems certified for Life and Public Safety and Emergency Operations unless specifically approved by TE-005OP2H3B, in writing, prior to system design and installation.

7.3.6 TELECOMMUNICATIONS CABLE DUCTS UNDER CELLULAR FLOORS

(a) The area below raised or accessed flooring shall be considered an air plenum. Therefore, all system wires and cables provided in these areas shall be plenum-rated and installed accordingly.

(b) Each underfloor cable duct and/or cellular floor installation shall be provided with appropriate TIP and electrical wire management system(s).

(c) All underfloor ducts and/or cellular floors shall extend to wall partitions in rooms where installed.

7.3.7 VERTICAL RISERS

(a) The main horizontal conduit runs from the MCR to each stacked TR shall be of the size, use, and count described in Table 7.1, and shall penetrate the TR floor and terminate 18 in [450 mm] AFF. Each floor penetration shall be sleeved and sealed with approved firestopping compound regardless of whether filled with wire/cable.

(b) Each TR ceiling and corresponding floor of the above stacked TR shall be provided with sleeved penetrations of the size, use, and count described in Table 7.1. Each penetration shall be sealed with approved firestopping compound regardless of whether filled with wire/cable.

7.4 TELECOMMUNICATIONS OUTLETS

(a) Outlet boxes shall be the same minimum size as NEC standard 6 in x 6 in x 2.5 in [152 mm x 152 mm x 64 mm] that could contain dual duplex electrical outlets, recessed to allow EMT or flexible conduit to terminate on them.

(b) Outlet boxes shall be equipped with full covered wall faceplates that shall cover the entire box without trim rings added, and shall employ two each modular Category 5E (or better) RJ-45/11 jacks for voice, and two each modular Category 5E (or better) RJ-45 jacks for data. The box shall also provide space for the addition of one modular stainless steel (AT&T-ST) fiber-optic jack and one BNC (A/E note: May be substituted for a "F" or "ST" type, depending on system design) analog coax cable jack (for a total of six available modular jack positions).

(c) Unless otherwise specified, mounting heights for telecommunication outlets shall be:

Table 7-2 Telecommunications Outlets Mounting Height

AREA/FUNCTION	MOUNTING REQUIREMENTS
Pay station	4 ft [1.2 M] above finished floor (AFF)
Desk outlet	18 in [450 mm] AFF
Special Use Areas	As required by A/E design and approved by TE-005OP2H3

(d) For Patient Bed Prefabricated Wall Units (PBPU), use the provided receptacle box, conduit and connections in order not to violate the PBPU's UL Medical/Life Safety Certification. Modifications to the PBPU must be approved by the manufacturer. Violations of the units' UL certification must be corrected at the contractor's expense.

(e) For Special Systems, provide each outlet minimum 18 in [450 mm] AFF unless otherwise specified by system design or indicated on the drawings.

(f) Outlets shall not be located within 48 in [1200 mm] of the "swing open" side of inward-opening doors or within 18 in [450 mm] of light switches, electrical receptacles, or thermostats.

7.5 DRAWINGS

(a) The A/E shall clearly show the locations of TIP, telecommunications outlets, conduit runs, cable trays or wireways, equipment cabinets and/or racks, telecommunications backboards, and terminal, junction, and/or pullboxes on the drawings. The drawings shall clearly identify locations of these runs when both originating and terminating points are not shown on the same drawing.

(b) The A/E shall clearly show the exterior and/or underground TIP raceway system, including distances between buildings, manholes, and in-ground pullboxes.

(c) All raceways sizes shall be indicated on the drawings.

(d) Drawings shall include a detailed riser diagram for all distribution systems and the interfaces between systems.

7.6 WIRES AND CABLES

(a) The design of the raceway system in existing buildings shall incorporate the existing facility TIP raceway systems. All unused existing distribution wires, cables, and pathway equipment not incorporated in the new or replacement pathway system shall be removed and disposed of at the direction of the Resident Engineer.

(b) Plenum/CMP rated wire or cable shall be provided in all air-handling plenum locations. Non-plenum/CM wire or cable may be provided in all other areas.

(c) Elevator voice cables providing voice service to the elevator car shall be extended to a terminal box located outside the elevator shaft, approximately midway between the maximum up/down travel range of the elevator car. The terminal box must be easily accessible from the internal hospital area and connected by 1.5 in [40 mm] conduit to the nearest Telecommunications Room. Provide the outlet in the car's standard telephone back box.

7.7 SPECIAL SYSTEMS SPECIFIC REQUIREMENTS

7.7.1 GENERAL

Provide systems described in this manual as determined by project requirements. Not all systems may be required, and not all required systems may be listed below.

7.7.2 NURSE CALL

VA IDENTIFIED AS AN EMERGENCY/LIFE SAFETY SYSTEM

(a) Provide Nurse Call / Code Blue system(s) as required. Refer to VA Master Specification 27 52 23.

(b) Provide Emergency Nurse Call Stations in non-patient-ward toilet areas only at the following locations:

- Dental Service (if not covered by a hands-free telephone intercom system)
- Drug Dependency Treatment Clinic
- Genitourinary Clinic
- Nuclear Medicine
- Oncology Clinic/Area (if not covered by a Nurse Call or Code One/Blue system)
- Dialysis Clinic (if not covered by a Nurse Call or Code One/Blue System)
- Radiology Clinic (if not covered by a Nurse Call or Code One/Blue System)
- Emergency Room

(c) Contact TE-005OP2H3 for specific engineering design and technical approvals when a Nurse Call System is required for the facility.

7.7.3 PUBLIC ADDRESS (PA)

VA IDENTIFIED AS AN EMERGENCY COMMUNICATIONS SYSTEM AND THE PRIMARY CODE BLUE TEAM NOTIFICATION SYSTEM

(a) Provide PA and mass notification system(s) as required. Refer to VA Master Specification 27 51 16.

(b) Provide a PA system that includes a speaker volume control in each Multipurpose, Break, and Recreation Room.

(c) Contact TE-005OP2H3 for specific engineering design and technical approvals when a PA System is required for the facility.

7.7.4 INTERCOMMUNICATION (IC)

VA IDENTIFIED AS AN EMERGENCY COMMUNICATIONS SYSTEM

(a) Provide intercommunications system(s) as required. Refer to VA Master Specification 27 51 23.

(b) At loading docks, provide an empty conduit system for connection of a telephone intercom.

(c) In the Dental Clinic, provide a dedicated IC system throughout the Dental area reporting to the Clinic's Administrative Desk. Telephone hands-free instruments may be substituted for a formal IC system as an acceptable alternate, if specifically approved by TE-005OP2H3 during the project design phase.

(d) Provide appropriate IC systems at designated facility ingress and egress points connected to the Security Service Control Room.

(e) Contact TE-005OP2H3 for specific engineering design and technical approvals when an IC System is required for the facility.

7.7.5 MASTER ANTENNA TELEVISION (MATV)

(a) Provide Master Antenna Television (MATV) system(s) that are High Definition TV (HDTV) compliant, as required. Refer to VA Master Specification 27 41 31.

(b) Master Antenna system antennas shall be mounted on hinged poles (or equivalent) where subjected to salt-spray atmosphere.

(c) Provide MATV outlets at ceiling or on the wall near patient beds. Verify type TV set (swing arm, ceiling, or wall-mounted) to be used. Provide additional MATV wall/ceiling outlets mounted at designated areas.

(d) Contact TE-005OP2H3 for specific engineering design and technical approvals when a MATV System is required for the facility.

7.7.6 MOTION INTRUSION DETECTION (MID)

VA IDENTIFIED AS A PATIENT/STAFF/PUBLIC SAFETY SYSTEM

(a) Provide Motion Intrusion Detection (MID) system(s) as required. Refer to VA Master Specification 28 16 11.

(b) Contact TE-005OP2H3 for specific engineering design and technical approvals when a MID System is required for the facility.

7.7.7 CLOSED CIRCUIT TELEVISION (CCTV)

VA IDENTIFIED AS A PATIENT/STAFF/PUBLIC SAFETY SYSTEM WHEN USED FOR POLICE AND LAW ENFORCEMENT FUNCTIONS

(a) Provide Closed Circuit TV (CCTV) system(s) for door monitoring or security as required. Refer to VA Master Specification 28 23 00.

(b) Contact TE-005OP2H3 for specific engineering design and technical approvals when a CCTV System is required for the facility.

7.7.8 ELECTRONIC ACCESS AND DOOR CONTROL (EADR)

VA IDENTIFIED AS A PATIENT/STAFF/PUBLIC SAFETY SYSTEM

(a) Provide EADR system(s) as required. Refer to VA Master Specification 28 13 16.

(b) Contact TE-005OP2H3 for specific engineering design and technical approvals when an EADR System is required for the facility.

7.7.9 RADIO PAGING SYSTEM (RPS)

VA IDENTIFIED AS A PUBLIC SAFETY AND EMERGENCY COMMUNICATIONS SYSTEM, AND THE REDUNDANT CODE ONE/BLUE TEAM NOTIFICATION SYSTEM

(a) Provide RPS (identified as Public Safety Operation and upgraded to Life Safety when interfaced to Code One (Blue)) as required. Refer to VA Master Specifications.

(b) Contact TE-005OP2H3 for specific engineering design and technical approvals when a RPS System is required for the facility.

7.7.10 PATIENT/STAFF ANNUNCIATOR/LOCATOR SYSTEM (PAL)

VA IDENTIFIED AS A PATIENT/STAFF SAFETY COMMUNICATIONS SYSTEM

(a) Provide PAL system(s) as required. Refer to VA Master Specification 28 13 11.

(b) Contact TE-005OP2H3 for specific engineering design and technical approvals when a PAL System is required for the facility.

7.7.11 TWO-WAY RADIO SYSTEM (TRS)

VA IDENTIFIED AS AN EMERGENCY COMMUNICATIONS SYSTEM

(a) Provide TRS system(s) as required. Refer to VA Master Specification 27 32 41.

(b) Contact TE-005OP2H3 for specific engineering design and technical approvals when a TRS System is required for the facility.

7.7.12 DURESS ALARM AND EMERGENCY NOTIFICATION SYSTEM (ENS)

VA IDENTIFIED AS AN PATIENT/STAFF SAFETY COMMUNICATIONS SYSTEM

(a) Provide ENS system(s) as required. Refer to VA Master Specification 28 26 00.

(b) Under no circumstance shall the telephone system be used to provide duress alarm functions, although telephone STP or UTP circuits may be used with TE-005OP2H3 approval, provided that there are enough spare pairs to satisfy the telephone system installation and projected growth, and each system does not interfere with the other.

(c) Contact TE-005OP2H3 for specific engineering design and technical approvals when an ENS System is required for the facility.

7.7.13 SECURITY MANAGEMENT AND CONTROL, AND CENTRALIZED POLICE SECURITY MANAGEMENT SYSTEMS (SMS)

VA IDENTIFIED AS A PATIENT/STAFF/PHYSICAL SECURITY COMMUNICATIONS SYSTEM

(a) Provide SMS system(s) and/or centralized police security management systems as required. Refer to VA Master Specification 28 13 16.

(b) Contact TE-005OP2H3 for specific engineering design and technical approvals when a SMS System is required for the facility.

7.7.14 PATIENT ANNUNCIATOR/LOCATOR SYSTEM (PAS)

VA IDENTIFIED AS A PATIENT/STAFF/PHYSICAL SECURITY COMMUNICATION SYSTEM

(a) Provide PAS system(s) as required. Refer to VA Master Specification 28 16 11.

(b) Contact TE-005OP2H3 for specific engineering design and technical approvals when a PAS is required for the facility.

CHAPTER 8: INFORMATION TECHNOLOGY ROOMS REQUIREMENTS

Note: *Chapters 7 and 8 contain like references, guidelines and instructions that refer to each specific system/function. These "like" descriptions have been cross-referenced throughout both chapters to reduce redundancy. Additionally, each chapter contains acronyms that pertain to both; these have been combined in the beginning of Chapter 7.*

8.1 SCOPE ..... **Error! Bookmark not defined.**
8.2 ROOM TYPES AND DEFINITIONS 8-3
8.2.1 GENERAL 8-3
8.2.2 ANTENNA HEADEND EQUIPMENT ROOM (OPTIONAL) 8-3
8.2.3 DEMARC ROOM 8-3
8.2.4 TELEPHONE OPERATORS ROOM (TOR) 8-3
8.2.5 MAIN COMPUTER ROOM (MCR) 8-3
8.2.6 TELECOMMUNICATIONS ROOM (TR) 8-3
8.2.7 POLICE, ENGINEERING, AND EMERGENCY MANAGEMENT CONTROL ROOMS, AND OTHER DESIGNATED ROOMS 8-4
8.3 GENERAL ELECTRICAL REQUIREMENTS 8-4
8.3.1 GENERAL 8-4
8.3.2 POWER 8-4
8.3.3 LIGHTING 8-4
8.3.4 GROUNDING 8-4
8.3.5 SECURITY 8-5
8.3.6 CABLE AND WIRE PATHWAYS 8-5
8.4 ANTENNA HEADEND EQUIPMENT ROOM (OPTIONAL) 8-5
8.4.1 GENERAL 8-5
8.4.2 LOCATION 8-5
8.4.3 CONFIGURATION 8-6
8.4.4 ROOM ENVELOPE 8-6
8.4.5 TIP WIRE/CABLE INTERFACE AREA 8-6
8.4.6 HEATING, VENTILATION, AND AIR CONDITIONING 8-7
8.4.7 FIRE PROTECTION 8-7
8.4.8 POWER 8-7
8.4.9 LIGHTING 8-7
8.4.10 GROUNDING 8-7
8.4.11 SECURITY 8-7
8.4.12 WIRE MANAGEMENT 8-7
8.5 DEMARC ROOM 8-8
8.5.1 REQUIREMENTS 8-8
8.6 TELEPHONE OPERATORS ROOM (TOR) 8-8
8.6.1 POWER 8-8
8.6.2 LIGHTING 8-8
8.7 MAIN COMPUTER ROOM (MCR) 8-8
8.7.1 POWER 8-8
8.7.2 LIGHTING 8-9
8.7.3 GROUNDING 8-9
8.7.4 SECURITY 8-9
8.7.5 WIRE MANAGEMENT 8-10
8.8 TELECOMMUNICATIONS ROOM (TR) 8-10
8.8.1 POWER 8-10
8.8.2 LIGHTING 8-10
8.8.3 GROUNDING 8-10

8.8.4 SECURITY 8-10
8.8.5 WIRE MANAGEMENT 8-10

8.1 GENERAL

(a) This chapter covers the electrical requirements for information technology rooms and spaces in VA facilities. These rooms may be occupied by the Office of Information and Technology or Facilities Management Service. Refer also to the OIT Design Guide.

(b) Contact VA Telecommunications Engineering (TE-005OP2H3 – 301-734-0376) for assistance with systems design and preparation of construction documents.

8.2 ROOM TYPES AND DEFINITIONS

8.2.1 GENERAL

Provide rooms as determined by project requirements. Not all room types may be required and not all required room types may be listed below. Refer also to the Office of Information and Technology Design Guide.

8.2.2 ANTENNA HEADEND EQUIPMENT ROOM (OPTIONAL)

The need for this room shall be determined by the project requirements. If a headend room is not provided, then functions and requirements shall be included in a room separated from the MCRs and TRs to ensure that electromagnetic interference is not detected in these areas.

8.2.3 DEMARC ROOM

The Demarc Room is a room designed to be the initial termination point in the building for services by outside providers such as telephone companies, data providers, CATV providers, security providers, etc.

8.2.4 TELEPHONE OPERATORS ROOM (TOR)

The TOR is where telephone operators are located. Operators provide service to the entire building or facility. In most case, the Telephone Operators Room is continuously staffed. At many facilities, the operators must also monitor critical alarms for equipment throughout the facility.

8.2.5 MAIN COMPUTER ROOM (MCR)

The MCR shall be designed to house equipment that provides data and telephone services to the entire building or facility. In addition to the MCR, there may be a Backup Computer Room that provides backup services in the event of a catastrophic failure at the MCR.

8.2.6 TELECOMMUNICATIONS ROOM (TR)

(a) The TR is a room designed to centrally deliver telephone, data, and special systems services to users and equipment on that floor. There may be multiple TR rooms on a floor. Where multiple TR rooms are employed, the TRs shall be associated with specific functional areas, as well as being stacked from floor to floor.

(b) The design term "TR" replaces the terms "Signal Closet," "Telecommunications Closet," and "IDF," which are no longer used. The new designation indicates the current construction practice of combining telephone, data, special systems, and fire alarm functions into a single terminus, control, and distribution point.

8.2.7 POLICE, ENGINEERING, AND EMERGENCY MANAGEMENT CONTROL ROOMS, AND OTHER DESIGNATED ROOMS

Other rooms that house specialized functions in the facility are Police Control Room (PCR), Engineering Control Center (ECC), Emergency Management Control Room (EMCR), and other designated control rooms.

8.3 GENERAL ELECTRICAL REQUIREMENTS

8.3.1 GENERAL

The following is a list of minimum electrical requirements that apply to all telephone, data, and special system rooms and spaces (hereinafter referred to as "rooms" in this manual) that contain electronic and information technology equipment, whether under the authority of the Office of Information & Technology (OIT) or Facilities Management Service (FMS).

8.3.2 POWER

Power for all rooms is required for 24 x 7 x 365 operations. Equipment shall be connected to the appropriate branch of the Essential Electrical System. Equipment (other than HVAC) shall be backed by an uninterruptible power supply (UPS).

8.3.3 LIGHTING

Refer to CHAPTER 6 and APPENDIX A, ILLUMINATION LEVELS for room lighting requirements.

8.3.4 GROUNDING

(a) Telecommunications systems grounding and bonding shall consist, at a minimum, of an equipotential grounding system (Telecommunications Bonding Backbone (TBB)) that originates from the Telecommunications Main Ground Bar (TMGB). The TMGB, typically located in the Main Computer Room, is then connected to other telecommunications spaces, independently from other building grounding systems, such as electrical or lightning protection, via the TBB.

(b) The TMGB is connected to the building electrical service ground point via a mechanically and electrically protected minimum #1/0 copper equipotential grounding conductor, as well as grounded to building steel. The TBB helps ensure that all equipment in the telecommunications spaces is referenced at the same equipotential earth ground level, and reduces high frequency electrical noise resulting from high speed digital switching, RFI, and EMI.

(c) Cabinet, rack, and fixed structures bonding conductor(s) shall be minimum #6 AWG insulated stranded copper wire, or equivalent copper braid. All frames and cabinets shall be grounded in accordance with ANSI/TIA/EIA-607.

(d) The telecommunications grounding system shall comply with ANSI/TIA/EIA-607 requirements and follow the guidelines of the latest edition of BICSI – Telecommunications Distribution Methods Manual.

8.3.5 SECURITY

(a) The minimum physical security requirements for the Demarc Room(s), Main Computer Room, Telecommunications Rooms, Antenna Headend Equipment Room, and additional rooms containing information technology equipment are an electronic access control security system that is fully functionally connected to the Police Control Room SMS, a cipher lock with numeric keypad and associated electronic card access device and electric strike, and digital CCTV camera remoted to the OIT Chief's Office and directly controlled by the facility's SMS. Each room security system shall be powered from the building Essential Electrical System with local UPS system backup.

(b) Each programmable door control shall be fully functional with the SMS in a standalone status if its connection to the controller is lost (aka "smart system"). Once the connection is restored, the local door control system shall update the SMS regarding all operations that occurred after the connection was interrupted, and the SMS shall update the local door control units to current operational function.

(c) The access control and SMS shall be fully compliant with VA PIV "Smart" ID Card and at a minimum, FIPS 201-1 listed and labeled.

8.3.6 CABLE AND WIRE PATHWAYS

Refer to CHAPTER 7 for conduit and pathway requirements.

8.4 ANTENNA HEADEND EQUIPMENT ROOM (OPTIONAL)

8.4.1 GENERAL

The Antenna Headend Equipment Room shall be located in the mechanical penthouse or other area dictated by system design. The room shall accommodate all provided and planned Special Systems and Headend Cabinets (i.e., MATV, CCTV, SSTV, RED, PA, Two-Way Radio, RPS, etc.). See CHAPTER 7 for Special Systems information.

8.4.2 LOCATION

(a) A dedicated room is required. This room shall be located in the mechanical penthouse (as close as possible to a roof entrance) or attic, or an area as dictated by system design. It shall not be located in the elevator equipment room, in the basement, or below the Base Flood Elevation.

(b) The room shall not be located further than 300 ft [90 M] from the nearest vertically-stacked TR.

(c) If located in the mechanical penthouse or attic and approved by TE-005OP2H3, the room may be separated from the rest of the area by floor-to-ceiling metal chainlink security fence with a minimum 40 in x 84 in [1000 mm x 2100 mm] locking gate with two sets of keys. If located in the room, telephone, or data equipment shall not use fencing of any type except to partition area within the secure room.

8.4.3 CONFIGURATION

(a) The room shall be a minimum of 10 ft x 12 ft [3 M x 3.7 M], or as large as the sum of the provided and future systems require, including space for UPS equipment. The room shall be sized for the headend equipment of a minimum of five each separate systems, four each future systems, one each overhead and wall wire management system, four each 4-inch ID weatherproof wall/ceiling cable feedthrus, and two each 4-inch ID conduits to the nearest vertically stacked telecommunications room (TR). The space for future systems shall be clearly indicated on the contract documents. Space shall be per Table 8-1.

Table 8-1 Headend Equipment Room Size

NUMBER OF EQUIPMENT CABINET/RACKS	ROOM SIZE SQ FT [SQ M]
4 minimum	224 [22]
Add 2 UPS	224 [22]
Add 1 for System Grounding Block/Main TIP Distribution Panel (MTDP)	256 [24]
5 minimum	256 [24]
Add 2 for UPS	256 [24]
Add 1 for System Grounding Block/MTDP	289 [27]

(b) Cabinets are installed joined or side by side, in which case the 3 ft [900 mm] rule applies around the entire assembly. Minimum ceiling height shall be 8 ft [2.4 M] above finished floor.

(c) The room may be sized to use an Environmental Equipment Protection Cabinet in lieu of an air-handled space, if previously approved by the Facility Engineer and TE-005OP2H3. Add three each sf with 3 ft [0.9 M] clear floor area circumference per environmental cabinet.

8.4.4 ROOM ENVELOPE

Room shall be enclosed with fire-rated construction in accordance with NFPA 75.

8.4.5 TIP WIRE/CABLE INTERFACE AREA

Provide a plywood-covered wall area, minimum size of 8 ft x 8 ft [2.4 M x 2.4 M], to provide a common termination point for all the cabling entering and leaving the HE Room.

8.4.6 HEATING, VENTILATION, AND AIR CONDITIONING

(a) Refer to the HVAC Design Manual.

(b) A minimum of 30,000 BTU/H cooling capacity is required.

(c) A fully climate-controlled, standalone equipment cabinet is acceptable for each special system in lieu of fully acclimatizing the HE Room.

8.4.7 FIRE PROTECTION

Refer to the VA Fire Protection Design Manual.

8.4.8 POWER

Refer to SECTION 8.3.2, POWER.

8.4.9 LIGHTING

Refer to SECTION 8.3.3, LIGHTING.

8.4.10 GROUNDING

(a) Provide a copper bus plate minimum 6 in x 18 in x 0.5 in [150 mm x 450 mm x 13 mm], with a connection point located on the inside wall within the immediate area of the antenna coaxial cable(s) entrance conduit sleeves. Connect this plate to the lightning protection system with a minimum #1/0 AWG stranded copper wire, or increased sized connection device (i.e., strap, buss, etc.) as approved by the RE, to maintain the integrity of the lightning protection system so each of the system antenna cables' coaxial cable lightning protectors can be installed and connected to the plate.

(b) Refer to SECTION 8.3.4, GROUNDING for additional requirements.

8.4.11 SECURITY

Refer to SECTION 8.3.5, SECURITY.

8.4.12 WIRE MANAGEMENT

(a) The room shall be provided with waterproof wall entrance sleeves (Refer to Table 7.2) to allow connecting of each outside antenna coaxial cable to the room equipment. Add extra sleeves for additional outside mounted antennas as required by system design. One of these sleeves shall contain only the lightning protection connection.

(b) The room shall be provided with a minimum separate 6 in x 6 in [150 mm x 150 mm] cable duct/ladder/wireway from the designated TIP interface point to the dedicated waterproof

locking 24 in x 24 in x 12 in [600 mm x 600 mm x 300 mm] TIP connection enclosure. A minimum 12 in [300 mm] cable ladder may be used for this purpose if previously approved by TE-005OP2H3. A minimum of five each 3 in [75 mm] conduits may be provided in lieu of the cable duct/ladder/wireway; additional cable duct/ladder/wireway shall be provided based on overall system design, as coordinated with TE-005OP2H3.

(c) The mixing of coaxial cables and STP/UTP/fiber optic/AC and DC power wiring within the cable duct/ladder/wireway and/or conduits is not allowed.

(d) Each wire/cable connection point shall be provided with connection capability and routes to connect via the room's internal wire management system to the facility's TIP system.

(e) Provide two 4 in [100 mm] conduits to the nearest stacked Telecommunications Room.

8.5 DEMARC ROOM

8.5.1 REQUIREMENTS

All requirements of SECTION 8.3, GENERAL ENVIRONMENTAL, POWER AND SPACE REQUIREMENTS, apply to the Demarc Room.

8.6 TELEPHONE OPERATORS ROOM (TOR)

8.6.1 POWER

(a) Refer to SECTION 8.3.2, POWER.

(b) Provide sufficient 120V receptacles at each operator position.

8.6.2 LIGHTING

Refer to SECTION 8.3.3, LIGHTING.

8.7 MAIN COMPUTER ROOM (MCR)

8.7.1 POWER

(a) Refer to SECTION 8.3.2, POWER.

(b) The room shall be served by dedicated electrical panel(s) capable of providing 208/120V and/or 277/480V power as required by the UPS equipment, HVAC equipment, and general power use. Each panel shall contain 20% spare electrical capacity and spare circuit breaker space. The panels shall be located in the adjacent HVAC and Electrical Equipment Room, Computer Area.

(c) Provide a minimum of one quadraplex receptacle (two duplex) for each 8 linear ft [2.4 linear M] of wall space.

(d) A UPS system or systems must provide power for a period of 4 hours, or as required in the Physical Security Design Manual. Refer to the OIT Design Guide for more information on system topology within the Main Computer Room.

(e) UPS equipment shall be sized based on the equipment requirements, plus future anticipated growth. The initial design load shall not be less than 30%, and not more than 70% of the UPS capacity.

(f) UPS systems shall be monitored by the PCR SMS for power, alarms, and alarm history. UPS systems shall have dry contacts or external alarm and control from the PCR SMS and one "C" contact for local computer signaling. UPS systems shall be provided with computer system shutdown software and hardware connectivity as required.

(g) Each workstation shall be provided with one UPS-backed duplex receptacle and two duplex normal power receptacles for desk lamps, fans, pencil sharpeners, etc.

(h) Emergency Power Off (EPO) push buttons shall be installed according to NFPA 75.

8.7.2 LIGHTING

(a) Refer to SECTION 8.3.3, LIGHTING.

(b) Provide battery-powered lighting in accordance with NFPA 75 and 101.

8.7.3 GROUNDING

(a) Refer to SECTION 8.3.4, GROUNDING.

(b) The TMGB shall be directly connected to the facility's electrical ground via a mechanically and electrically protected minimum #1/0 AWG stranded copper equipotential grounding conductor. An AC electrical equipment grounding conductor is not acceptable for this function and shall not be approved.

8.7.4 SECURITY

(a) Refer to SECTION 8.3.5, SECURITY.

(b) Each door shall have a color security surveillance camera that connects to a color monitor in the PCR.

(c) A Motion Intrusion Detection (MID) system shall be installed within the MCR. The system shall be controlled by the PCR SMS.

(d) A duress alarm button shall be placed every 10 linear ft [3 M] within the MCR, annunciating to the PCR, SMS, and ECR, and to the Telephone Operators Room and one additional continuously-manned location.

8.7.5 WIRE MANAGEMENT

(a) Refer to SECTION 7.3, CONDUITS AND BOXES. Provide sleeves and conduit for initial and anticipated TIP access to the MCR.

(b) Provide two levels of cable tray below the ceiling. The upper tray shall contain fiber optic and copper backbone cabling. The lower tray shall contain cabling that connects equipment within the MCR. No information technology cabling shall be routed below the access flooring. Coordinate the cable tray size and location with the rack, cabinet, and hot aisle containment duct layout of the MCR.

8.8 TELECOMMUNICATIONS ROOM (TR)

8.8.1 POWER

(a) Refer to SECTION 8.3.2, POWER.

(b) The room shall be served by a dedicated panelboard, located in the room. In addition to the circuits required to power the IT equipment and/or UPS equipment, provide a separate 120V, dedicated 20A circuit with two quadraplex receptacles centered in each side backboard, two quadraplex receptacles centered in each front backboard on either side of the room door, and three quadraplex receptacles centered in the rear backboard. All receptacles shall be 18 in [450 mm] above finished floor. Allow three quadraplex receptacles on each 20A circuit.

8.8.2 LIGHTING

Refer to SECTION 8.3.3, LIGHTING.

8.8.3 GROUNDING

Refer to SECTION 8.3.4, GROUNDING.

8.8.4 SECURITY

Refer to SECTION 8.3.5, SECURITY.

8.8.5 WIRE MANAGEMENT

(a) Each room shall be provided with lateral and vertical risers from the MCR to each room to support the TIP distribution system for telephone, data, and special systems.

(b) Each room shall be provided with two levels of cable tray. The upper level of tray shall contain backbone cables. The lower level of tray shall contain horizontal distribution cables, and shall connect to the floor distribution tray.

(c) Refer to CHAPTER 7 for additional requirements.

CHAPTER 9: SPECIAL MEDICAL AND ALARM SYSTEMS

9.1 GENERAL 9-3
9.2 PATIENT WALL SYSTEMS 9-3
9.3 PREFABRICATED BEDSIDE PATIENT UNIT (PBPU) 9-3
9.3.1 PBPU INSTALLATION 9-3
9.3.2 PBPU APPLICATION 9-3
9.4 MEDICAL GAS, VACUUM, AND AIR ALARM SYSTEMS 9-4

This page intentionally left blank.

9.1 GENERAL

VA uses nonflammable anesthetics in Operating Rooms in Surgical Service and Medical Research Service. Installations in these areas shall conform to the portions of NFPA 99 that pertain to nonflammable anesthetics.

9.2 PATIENT WALL SYSTEMS

In certain intermediate and critical care areas, VA requires the installation of patient wall systems (referred to as Prefabricated Bedside Patient Unit (PBPU)) in patient bedrooms/areas. The PBPUs shall be installed as described in this design manual.

9.3 PREFABRICATED BEDSIDE PATIENT UNIT (PBPU)

(a) Each OEM produced-PBPU contains a specific UL Rating, Listing, and Labeling for severe medical applications. Under no circumstance shall any second party equipment be attached or installed in the PBPU without written authorization from the PBPU OEM.

(b) During installation or VA Proof of Performance testing and certification: if a PBPU is found to have equipment installed or attached that violates its UL ratings, it shall be the responsibility and expense of the contractor to restore the respective UL rating(s) per the written instructions of the PBPU OEM and the UL. Once the corrections are made, each affected unit shall be reinspected by TE-005OP2H3 at the Contractor's Expense. Contact TE-005OP2H3 for technical assistance.

(c) Install PBPU(s) as required. Refer to VA Master Specification 10-25-13 for specific requirements.

9.3.1 PBPU INSTALLATION

(a) All PBPUs shall be surface-mounted on the patient headwall.

(b) All installations in one bedroom shall be at the head and to the corridor side of the bed.

(c) All PBPUs to be located between a pair of beds in multi-bed areas shall be centered between the beds. If an odd bed remains, apply the one-bedroom concept.

9.3.2 PBPU APPLICATION

Table 9-1 describes the type and quantity of PBPUs in different bed areas.

Table 9-1 PBPU Application

BED AREA	TYPE	QUANTITY
ALCOHOL TREATMENT UNIT		Not Required
AMBULATORY CARE		
Observation and Treatment Room	PBPU-Style A1	Each Bed
Life Support	PBPU-Style C	Each Bed
Minor Operating Room		Not Required
DOMICILIARY UNIT		Not Required
DRUG DEPENDENCY TREATMENT UNIT		Not Required
DIALYSIS CENTER		
One-Bed Room	PBPU-Style B2	Each Bed
Multi-Bed Room	PBPU-Style B2	Each Bed
INTENSIVE CARE UNITS		
Coronary	PBPU-Style C	Each Bed
Surgical	PBPU-Style C	Each Bed
Medical	PBPU-Style C	Each Bed
General Purpose	PBPU-Style C	Each Bed
NURSING HOME CARE UNIT		Not Required
NURSING UNITS		
Intermediate Care	PBPU-Style A1	Each Single Bed
Intermediate Care	PBPU-Style A2 (25% of total beds in unit)	Between Each Pair of Beds
MS&N (Medical, Surgical Neurological, Ortho., and RHMS)	PBPU-Style A1	Each Single Bed
MS&N (Medical, Surgical Neurological, Ortho., and RHMS)	PBPU-Style A2	Between Each Pair of Beds
PSYCHIATRIC		Not Required
RESPIRATORY CARE	PBPU-Style B1 (90% of total beds in unit)	Each Bed
Monitored Beds	PBPU-Style C (10% of total beds in unit)	Each Bed
SPINAL CORD INJURY UNIT	PBPU-Style A1	Each Bed
Medical Isolation	PBPU-Style C	Each Bed
Acute/Respiratory Care	PBPU-Style C	Each Bed
SURGICAL RECOVERY ROOM	PBPU-Style B1	Each Bed

9.4 MEDICAL GAS, VACUUM, AND AIR ALARM SYSTEMS

(a) Provide two master alarm signal panels for nonflammable medical gas, medical-surgical vacuum, and laboratory air and laboratory vacuum systems in separate warning locations. Provide master alarm panels at the Telephone Switchboard and Engineering Control Center. If an Engineering Control Center is not provided, install master alarm panels at the Security Office or other suitable continuously staffed location.

(b) Provide area alarms at Nurse Stations in locations where nonflammable medical gas and medical-surgical vacuum systems are installed.

(c) NFPA 99 allows one of the two required alarm systems to be computerized. If this option is chosen by the A/E, VA prefers the computerized system to be the HVAC control system, if it is UL-listed for this application. Addressable fire alarm systems shall be permitted to monitor medical gas alarms provided that the alarm signals are programmed as a supervisory signal and do not initiate the building fire alarm system.

This page intentionally left blank.

APPENDIX A: ILLUMINATION LEVELS

APPENDIX A: ILLUMINATION LEVELS	
AREA DESCRIPTION	**LIGHTING LEVEL (fc) ***
ACTIVITIES ROOM AND DINING SPACE	50
AGENT CASHIER	30
AIRLOCK (ANTE ROOM)	10
AMBULATORY CARE	
AMB. SURGERY OR	300-1000 (Note: k)
CONSULTATION	50
EXAMINATION/TREATMENT	50
LIFE SUPPORT UNIT	
GENERAL	30
OVER BED	50 (Note: a, d, h)
MULTIPURPOSE EXAMINATION	50
OBSERVATION AND TREATMENT	
GENERAL	30
OVER BED	50 (Note: a, h)
OVER HEAD OF BED	30
SCREENING PROCTOSCOPY AND SIGMOIDOSCOPY	50
SECURITY EXAMINATION	50 (Note: h)
ANESTHESIA	
ANESTHESIOLOGY PREPARATION	50
STORAGE	30
WORKROOM, ANESTHESIA, AND EQUIPMENT STORAGE	30
ANIMAL HOUSING AREA	20-60 (Note: d)
APPARATUS AND EQUIPMENT STORAGE	30
AUDIOMETRY ROOM AND TEST ALCOVE	50
AUDITORIUM	
SOCIAL ACTIVITIES	30
ASSEMBLY	30
AURAL REHABILITATION/SPEECH PATHOLOGY THERAPY	50
AUTOPSY AND MORGUE	
AUTOPSY	300-1000 (Note: a)
ISOLATION/TEACHING AUTOPSY	300-1000 (Note: a)
MORTUARY REFRIGERATOR(COLD ROOM)	30
BARBER SHOP	50
BARIUM PREPARATION	50
BATHROOM	20 (Note: b)
BEAUTY SHOP	50
BEDROOM	
NON-PATIENT	20
PATIENT (SEE PATIENT ROOMS)	
BILLIARD ROOM	20; Table 40
BLOOD SPECIMEN COLLECTION	50
BOILER ROOM	20; Burner Platforms 30

APPENDIX A: ILLUMINATION LEVELS	
AREA DESCRIPTION	**LIGHTING LEVEL (fc) ***
CANTEEN	
FOOD SERVICE AREA (SEE FOOD SERVICE)	
KITCHEN (SEE FOOD SERVICE)	
RETAIL STORAGE AND RECEIVING	30
RETAIL STORE	50
VENDING MACHINE AREA	20
WARD CART STORAGE	10
CAN WASH AND CAN CRUSHER(SEE FOOD SERVICE)	
CARDIAC PROCEDURE/CATHETERIZATION	30 (Note: d)
CARDIOPULMONARY REHABILITATION CENTER	50
CART STORAGE	20
CAST ROOM	50
CHAPEL	
ALTAR/ARK/REREDOS	100
CHANCEL (INCLUDING ALTAR & CHOIR)	30
CHOIR ROBING	30
EUCHARISTIC AND DEVOTIONAL	30 (Note: c)
NAVE	30 (Note: c)
SACRISTY	30 (Note: c)
CLASSROOM	50
CLEAN CAGE STORAGE	20
CLEAN LINEN	20
CLEAN LINEN SORTING	30
CLEAN UTILITY/SUPPLIES	20
CLEAN UTILITY/SPD CART	20
CLINIC, EVALUATION	50
CLINIC SPACE, LEARNING STATIONS	50
CLINIC SPACE, VOC. REHABILITATION THERAPY	50
CLOSETS	
ELECTRICAL	40
GENERAL	20
HOUSEKEEPING AIDS	30
HOUSEKEEPING AIDS(SURGERY)	30
LINEN	20
PLASTER AND SPLINT	30
CLOTHING CHANGE	20
CONFERENCE/CLASSROOM	50
CONFERENCE ROOM	50
CONGREGATE BATH/TOILET/HOPPER	50 (Note: b)
CONSULTATION	50
CONSULTATION/MEDICATION/CHART	50
CONSULTATION, VIEWING, AND TEACHING	50 (Note: c)
CONTROLLED TEMPERATURE ROOM	20
CONTROL ROOMS	
CONTROL AREA (RAD. THERAPY)	50 (Note: c)
CONTROL BOOTH/ALCOVE (X-RAY)	50 (Note: c)

APPENDIX A: ILLUMINATION LEVELS	
AREA DESCRIPTION	**LIGHTING LEVEL (fc) ***
CONTROL CENTER (INTENSIVE CARE)	30-50
CONTROL STATION (SURGERY SUITE)	70
CORRIDORS	
DENTAL SUITE	30
GENERAL NON-NURSING	20
GENERAL NURSING	Day 20; Night 10
LABORATORIES	30
QUARTERS	20
SURGICAL SUITE	50
COUNSELING/TREATMENT	50 (Note: c)
CRAWL SPACE	10
CREDIT UNION	50
CYSTOSCOPIC ROOM (NON-SURGERY)	
GENERAL	50; Table Surgery Light (Note: c)
DARKROOM: DEVELOPING, PRINTING, AND ENLARGING	30 (Note: c, g)
DAY ROOM	30-50
DECONTAMINATION	30
DENTAL SUITE	
DARKROOM	50 (Note: c, g)
DENTAL OFFICE	50
DENTAL RESIDENTS AND TRAINEES STUDY/CONFERENCE ROOM	50
EXAMINATION, HYGIENE, AND GENERAL TREATMENT OPERATORIES	50-100 (Note: a)
INSTRUMENT PREPARATION AND STERILIZATION	50
ORAL SURGERY	300-1000 (Note: a)
PATIENT INTERVIEW	50 (Note: c)
PREVENTIVE DENTISTRY	50a
PROSTHETIC LABORATORY	50 (Note: a); Local, 150 (Note: a); Impressions 200
RECOVERY	70 (Note: a)
RESEARCH LABORATORY	150 (Note: a)
SOILED SPD CART HOLDING	30
SUPPLY ROOM	30
X-RAY AREA	50 (Note: a)
DIALYSIS CENTER	
BEDROOM (MULTI-BED)	20
LOCAL OVER BED	50
LOCAL OVER ARM	100
OVER HEAD OF BED	30
DIALYSATE PREPARATION	50
DIALYSIS TRAINING (SEE BEDROOM ABOVE)	
EQUIPMENT SERVICE AREA SOILED/CLEAN	30

APPENDIX A: ILLUMINATION LEVELS	
AREA DESCRIPTION	**LIGHTING LEVEL (fc) ***
EQUIPMENT SERVICE AREA STORAGE	30
FINAL WATER TREATMENT	30
DISPENSING (SEE PHARMACY)	
DRESSING/RECOVERY	50
DRESSING ROOM	30
DRESSING/TOILET	20 (Note: b)
EAR, NOSE AND THROAT CLINIC (ENT)	
AUDIOMETRY ROOM AND TEST ALCOVE	50
EXAMINATION AND TREATMENT	50
STERILIZATION, PREPARATIONS, AND STORAGE	50
ELECTROCARDIOGRAPHIC (ECG)	
GENERAL	30 (Note: e)
MACHINE	30
ELECTROENCEPHALOGRAPHIC (EEG)	
EEG INSTRUMENT AND WORKROOM	50
EXAMINATION	50
PHYSICIANS READING	50
PREPARATION	50
ELECTROMYOGRAPHIC (EMG)	30 (Note: a)
ELECTRON MICROSCOPE SUITE	
CUTTING ROOM	200
PREPARATION	100 (Note: a)
SCOPE ROOM	30 (Note: c)
ELEVATORS	20
EMERGENCY GENERATOR	50
ENDOSCOPY	
UPPER AND LOWER GI	50 (Note: c)
WORKROOM	50
ENGINEERING CONTROL CENTER	30
ENTRANCE (SEE LOBBY)	
ENTRANCE (EXTERIOR)	5
EQUIPMENT STORAGE	20
EQUIPMENT STORAGE AND TESTING	20-100
ESCORT SERVICE	30
EXAMINATION AND TREATMENT	50 (Note: k)
EXAMINATION/CONSULTATION	50
EXERCISE ROOM	30
EXITS (AT FLOOR LEVEL)	5
EYE CLINIC	
EXAMINATION AND TREATMENT	50
REFRACTION AREA	30 (Note: c, g)
SURGERY	300-1000
VISUAL FIELD/DARKROOM ADAPTATION	50 (Note: c)
FILM PROCESSING	30; Local 20 (Note: c)

APPENDIX A: ILLUMINATION LEVELS	
AREA DESCRIPTION	**LIGHTING LEVEL (fc) ***
FLAMMABLE OR TOXIC STORAGE	20
FOOD SERVICE	
BULK FOOD CARTS	20
CART WASH CENTER	20
CLEAN DISH STORAGE	20
COLD FOOD AND DESSERT PREPARATION	50
DIETITIANS	50
DIETETICS-SERVING UNIT	50
DINING ROOM/AREA/SPACE	30
DINING ROOM/RECREATION AREA	30 (Note: c)
DISHWASHING AREA/UNIT	30
FIXED SERVING LINE	30; Display 50
FOOD PROCESS AND PREPARATION	50
FOOD STORAGE	30
INGREDIENT CONTROL AREA	50
KITCHENETTE	50
MAIN KITCHEN	50
KITCHEN SERVING	50
LUNCH AREA WITH KITCHEN UNIT	30
LUNCH ROOM	30
MEAT AND VEGETABLE UNIT	50
MOBILE SERVING LINE	50
NUTRITION CLINIC	30
POT WASHING CENTER	30
REFRIGERATED AND FROZEN STORAGE	20
REFRIGERATED GARBAGE AND TRASH STORAGE	20
SANITATION SUPPLY STORAGE	20
SERVING LINE	30; Display 70
SERVING UNIT WORK AREA	30
SOILED DISH COLLECTION	20
SPECIAL NOURISHMENT PREPARATION	100
GAME AND ACTIVITY ROOM	40 (Note: c)
GAS STORAGE	20
GROSS SPECIMEN STORAGE	20
GI SCREENING PROCTOSCOPY/SIGMOIDOSCOPY ROOM	100
GU CARE ROOM	50
GU EXAMINATION/TREATMENT	50-100
HEALTH RECORDS STORAGE	20
HOSPITAL PLANS AND DRAFTING	50
INACTIVE RECORDS STORAGE	20
INFORMATION COUNTER	30
INFORMATION TECHNOLOGY	

APPENDIX A: ILLUMINATION LEVELS	
AREA DESCRIPTION	**LIGHTING LEVEL (fc) ***
DEMARC ROOM	30
ANTENNA HEADEND EQUIPMENT ROOM	70
MAIN COMPUTER ROOM, BACKUP COMPUTER ROOM	50; at 20" aff
NETWORK OPERATIONS ROOM	50
TELECOMMUNICATIONS ROOMS	50
TELEPHONE OPERATORS ROOM	50
WORKROOM, EQUIPMENT CONFIGURATION / REPAIR	70
INSTRUMENT CALIBRATION AND STORAGE	50
INTENSIVE CARE (SEE PATIENT ROOMS)	
INTERVIEW/CONSULTATION	30
INTERVIEW-EXAMINATION	70
ISOLATION BEDROOM (RECOVERY/ICU)	20; Local 70
KITCHENETTE/MULTIPURPOSE	30
LABORATORIES; GENERAL	50
BENCH AND TABLE TOP LIGHTING	50
BIOCHEMISTRY	50
BIOSAFETY	50
CARDIAC BLOOD GAS ANALYSIS	50
CHEMISTRY	50
CLINICAL CHEMISTRY/MICROBIOLOGY	50
COAGULATION	50
CYTOLOGY	50
DERMATOLOGY	50
DIAGNOSTIC	50
ENVIRONMENTAL	50 (Note: d)
FROZEN/AND GROSS SECTION	50
HIGH/LOW LEVEL IN-VITRO COUNTING	100
HISTOLOGY	50
IMMEDIATE RESPONSE (STAT)	50
IMMUNOPATHOLOGY	50
MICROBIOLOGY	50
MYCOBACTERIOLOGY (TB)	50
MYCOLOGY	50
ORTHOTICS	50
PHARMACEUTICAL EXPERIMENTATION	50
PHYSICS	50
PROCEDURAL	50
PULMONARY BLOOD GAS	50
RADIOIMMUNOASSAY (RIA)	50
BENCH AND TABLE TOP LIGHTING	
ROUTINE (HEMATOLOGY)	50
SPECIAL CHEMISTRY	50
SPECIMEN ACCESSIONING, PROCESSING, AND	50

APPENDIX A: ILLUMINATION LEVELS	
AREA DESCRIPTION	**LIGHTING LEVEL (fc) ***
DISTRIBUTION	
STUDENT LABORATORY-CLASSROOM	50 (Note: g)
URINE (URINALYSIS) AND FECES	50
URODYNAMICS	50; Table, Minor Surgery Light
LAUNDRY	
CART WASHER AREA	30
CENTRAL LIQUID SUPPLY SYSTEM	20
CLEAN LINEN HOLDING (FLOW RACK) AND ASSEMBLY AREA	300
CLEAN LINEN PROCESSING AREA	30
DISTRIBUTION AREA (CART STORAGE, DISPATCH, AND DOCK)	20
GENERAL ADMINISTRATIVE AREA	30
LINEN COLLECTION	20
LINEN PACK PREPARATION	30
LINEN REPAIR AREA	100
LINEN STORAGE	20
LUNCH ROOM/TRAINING ROOM	30
PRODUCTION AND SUPPORT AREA	30
RECEIVING AREA	30
SORTING AND WASHING AREA	30
UNIFORM EXCHANGE (AUTOMATED)	20
LIBRARY	
AUDIOVISUAL ROOM	30j
CIRCULATION/REFERENCE DESK	30
LIBRARIAN	50
MICROFORM AREAS	30
PHOTOCOPY AREA	30
SEATING SPACE (READER STATIONS)	30
SHELVING/STACK AREAS	30
WORKROOM/TECHNICAL SERVICES	50 (Note: j)
LINEN	
CLOSET	20
LINEN ROOM AND CLEAN SPD CART	30
LINEN SERVICE	30
SEAMSTRESS SPACE	70
SOILED COLLECTION	30
SOILED COLLECTION AND CENTRAL SORTING	30
SOILED LINEN HOLDING AREA	20
SOILED LINEN ROOM	20
LOADING DOCK	20
LOBBY/FOYER	Day 20; Night, 10
LOCKER ROOMS	20
LOUNGES	
READING	30

APPENDIX A: ILLUMINATION LEVELS	
AREA DESCRIPTION	**LIGHTING LEVEL (fc) ***
PATIENT'S LOUNGE AND TV ROOM	30 (Note: c)
MAIL ROOM AND DISTRIBUTION CENTER	50
MAIL ROOM/UNIT	50
MAINTENANCE/SHOPS (SEE SHOPS)	
MEDICAL AND GENERAL STORAGE (SEE STOREROOM)	
MEDICATION AND TREATMENT	100 (Note: g)
MEDICAL MEDIA PRODUCTION	
CAMERA ROOM	30
DARKROOM, FILM PROCESSING	30 Local 10 (Note: c)
FINISHING ROOM	50 (Note: a)
GRAPHICS ILLUSTRATION ROOM; ILLUSTRATION PREP. AREA	70; Tables 2000
PHOTOMICROGRAPHY	30
PRINTING AND ENLARGING	30; Local 10 (Note: c)
MEDICAL RESEARCH STORAGE (SEE STOREROOM)	
MINOR OPERATING ROOM	200 (Note: h)
MULTIPURPOSE ROOM	30
MUSIC ROOM	30
NOURISHMENT KITCHEN	50
NUCLEAR MEDICINE	
COMMON VIEWING AND CONFERENCE	30
EQUIPMENT CALIBRATION	50; Bench Tops 70
ISOTOPIC STORAGE AND PREPARATION AREA	50
RADIOPHARMACY	70
RECTILINEAR ORGAN SCAN	50 (Note: d)
SPECIAL PROCEDURE	50 (Note: d)
STATIONARY IMAGING	50 (Note: d)
THYROID UPTAKE	50 (Note: d)
WALK-IN REFRIGERATOR	20
NURSE'S STATION/WARD CLERK/DOCTOR'S CHARTING	
GENERAL; DAY	50
DESK/TABLE/COUNTER	50
OFFICES; GENERAL	50
OFFICES; STAFF	50
OFFICES; WORKSTATION CLERICAL OR TECHNICAL STAFF	50
ON-CALL ROOM	30 (Note: g)
ONCOLOGY CHEMOTHERAPY AGENT PREPARATION	100
ONCOLOGY CHEMOTHERAPY TREATMENT	100
OPERATING ROOMS (SEE SURGERY SUITES)	
ORTHOPEDIC CAST ROOM	50 work area; 100 cubicle
OXYGEN STORAGE	20
PARKING GARAGE	

APPENDIX A: ILLUMINATION LEVELS	
AREA DESCRIPTION	**LIGHTING LEVEL (fc) ***
ENTRANCE; DAY	50 Day; 1 Night
GENERAL TRAFFIC, PARKING, AND PEDESTRIAN AREAS	2 Day; 1 Night
PATIENT ROOMS	
GENERAL	10
ANTEROOM (ISOLATION)	20
BATH, PRIVATE, OR CONNECTING	30 (Note: b)
NIGHT OBSERVATION	10
OVER-BED TASK ILLUMINATION	50 (Note: a, c, f)
OVER HEAD OF BED	30 (Note: f)
PATIENT LOCKER AREA	20
SECURITY/SECLUSION BEDROOM	20
SERVICE ALCOVE	20
TOILET	30 (Note: b)
PHARMACY	
CONTROLLED SUBSTANCES VAULT AND SECURED DISPENSING	70
DRUG RECEIVING	70
DRUG UTILIZATION REVIEW	70
EXTEMPORANEOUS COMPOUNDING	100
EXTEMPORANEOUS REPACKAGING	50
FILING AND ASSEMBLY	100
HEMODIALYSIS (STORAGE)	30
INTERVENOUS ADMIXTURE AND ASEPTIC TRANSFER	100
MEDICATION ASSIGNMENT	70
MEDICATION PREPARATION AREAS	70
POISON CONTROL STORAGE	30
PREPACKAGING	100
PRESCRIPTION RECEIVING	70
PROSTHETICS AND MEDICAL SUPPLIES	30
RECEIVING	70
RECEIVING,STORAGE, AND RECORD CONTROL	70
STAT	100; Counter 70
STERILE FLUIDS AND ADMIXTURE SETS STORAGE	30
SUPPORT AREA	70
UNIT DOSE DISPENSING	100
VAULT (DRUGS)	30
PHONO-CARDIOGRAPHY	30; Machine 50
PLASTER AND SPLINT CLOSET	20
PNEUMATIC TUBE EQUIPMENT ROOM	20
POST OPERATIVE/RECOVERY WARD (RESEARCH)	75 (Note: g); Work Space 100
PROJECTION, PREPARATION, AND STORAGE	30 (Note: c)
PREFABRICATED SOUND SUITE-CONTROL ROOM	30 (Note: d)
QUIET AREA (PSYCHIATRIC)	50 (Note: g)
QUIET ROOM	30

APPENDIX A: ILLUMINATION LEVELS	
AREA DESCRIPTION	**LIGHTING LEVEL (fc) ***
RADIOLOGY SUITE	
ANESTHESIOLOGY PREPARATION AND RECOVERY	50; Over Beds 70 (Note: a, f)
AUTOMATED ROOM	30 (Note: d)
BARIUM PREPARATION	50
CENTRAL SILVER COLLECTION AREA	30
COMPUTERIZED AXIAL TOMOGRAPHY (CT)	30 (Note: d)
CONTROL BOOTH/ALCOVE	30 (Note: d)
DARKROOM	30 (Note: d)
DEDICATED CHEST ROOM	30 (Note: d)
EXAMINATION ROOM/AREA	50
FILM LIBRARY	50
FILM STORAGE UNDEVELOPED	10-30
MEGAVOLTAGE UNIT	10-30
PROCESSING AREA	50
RADIATION THERAPY	30 (Note: d)
SCRUB ROOM	70
SPECIAL PROCEDURES	
FLUORESCENT	50 (Note: d)
INCANDESCENT	20 (Note: d)
SUPERFICIAL THERAPY UNIT AND CONTROLS	10-30
SUPERVOLTAGE UNIT (COBALT 60)	10-30
ULTRASOUND	50 (Note: c)
VIEWING ROOM COMMON	20 (Note: j)
X-RAY ROOMS	30 (Note: d)
RECEIVING AND CLEANING	30; Benches, Tables, etc. 70
RECEIVING AND ISSUE AREA	30
RECEIVING AND SHIPPING DOCK	20
RECEPTION AND WAITING	20
RECOVERY ROOM (SEE SURGERY SUITE)	
RECREATION/MULTIPURPOSE ROOM	30
RESIDENT CLOTHING AND LUGGAGE STORAGE	10
RESIDENT'S LAUNDRY	30
SCRUB ALCOVE	100
SEAMSTRESS	500
SHOPS, MAINTENANCE AND REPAIR	
AIR CONDITIONING SHOP	50
CARPENTER SHOP	50
ELECTRICAL SHOP	50
GROUNDS MAINTENANCE SHOP	30
MACHINE SHOP	50
MASON SHOP	30
PAINT SHOP	50

APPENDIX A: ILLUMINATION LEVELS	
AREA DESCRIPTION	**LIGHTING LEVEL (fc) ***
PARTS AND TOOLS CLERK	30
PLUMBING SHOP	50
REPAIRING AND DEVELOPMENT	50
STORAGE (SEE STOREROOMS)	
SHOWER	30
SITZ BATH	30
SPECIMEN TOILET	30b
SOILED UTILITY/SPD CART	20
STAGE (GEN. ILLUM.)	30
STAIRWAYS	20
STERILIZATION AND SOLUTION PREPARATION	50
STOREROOMS	
FINE	30
MEDIUM	20
BULKY	20
STRETCHER AND WHEELCHAIR STORAGE	20
STRETCHER WAITING SPACE	20
SUBSTERILIZATION AND WORK AREA	50
SUPPLY PROCESSING AND DISTRIBUTION (SPD)	
AUTOMATIC CART WASH	20
BULK STORAGE AREA	20
CLEAN RECEIVING AND BREAKOUT	30
CLEAN SIDE	30
DISPATCHERS CONTROL STATION/OFFICE	30
INSPECTION AND PREPARATION OF SURGICAL LINEN AND PACKS	50
MANUAL EQUIPMENT WASH	30
PREPARATION ASSEMBLY AND STERILIZATION	30
SOILED RECEIVING AND DECONTAMINATION	30
STERILE/NON-STERILE STORAGE	30
STERILIZATION AND PREPARATION	30
VOLUNTEER AND TRAINING	30
WORK STATION/COMPUTER	30
SURGICAL SUITE	
CLEAN AND STERILE SUPPLIES	30
CLEAN CORE SUPPORT AREA	50
CONTROL ROOM (CYSTOSCOPIC)	30
DICTATION CUBICLE	30
EQUIPMENT AND APPARATUS STORAGE	20
EXTERNAL RADIOGRAPHIC CONTROL ROOM	20
OR HOUSEKEEPING AIDS CLOSETS	20
OPERATING ROOMS CARDIAC; CYSTOSCOPIC; GENERAL PURPOSE; NEUROSURGERY; ORTHOPEDIC	300-1000 (Note: h)
PATIENT HOLDING ROOM OR ALCOVE	50 (Note: c)
PUMP TECHNICIAN'S PREPARATION ROOM	70
RECOVERY	50; Over Beds 100 (Note:

APPENDIX A: ILLUMINATION LEVELS	
AREA DESCRIPTION	**LIGHTING LEVEL (fc) ***
	a, f)
SCRUB-UP ALCOVE	100
SOILED HOLDING AREA	30
SPECIAL EQUIPMENT RECORDING ROOM	30
WORKROOM, ANESTHESIA, AND EQUIPMENT STORAGE	30
SWITCHGEAR	50
THEATER	10 (Note: c)
SUPPLEMENTAL	20
FOYER	10
THERAPY	
CORRECTIVE CLINIC	50
EDUCATIONAL/VOCATIONAL	50
ASSIGNMENT SPACE	50
COMPENSATED WORK THERAPY CLINIC	50
EVALUATION	50
INSTRUCTION, ORIENTATION, & SIMULATOR SPACE (DRIVER TRAINING)	50
PATIENT REST AREA	30
GROUP THERAPY ROOM	30
TABLE	50
CONFERENCE RM	50 (Note: c)
INHALATION	30
OCCUPATIONAL	30
CLINICAL	30; Bench, 50, Fine 100
ORTHOTIC AND SPLINTING AREA	50
PHYSICAL	
ARM AND LEG WHIRLPOOLS	30
CLINIC	50
HUBBARD TANKS	30
HYDROTHERAPY	30
SPECIAL TREATMENT	70
TABLES AND INDIVIDUAL EXERCISE	30
TREATMENT AREA	50
RADIATION	
ORTHOVOLTAGE THERAPY UNIT	30 (Note: d)
PATIENT PRETREATMENT	50
RADIUM SEALED SOURCE ROOM	30
SIMULATOR	30
TREATMENT AREA	50 (Note: g)
TREATMENT PLANNING AREAS	70
VIEWING AND CONSULTATION	50 (Note: c)
RECREATION	
ARTS, CRAFTS, AND HOBBY	30
MULTIPURPOSE RECREATION	50
SPINAL CORD INJURY	

APPENDIX A: ILLUMINATION LEVELS	
AREA DESCRIPTION	**LIGHTING LEVEL (fc) ***
CLINIC	50
HUBBARD TANKS	30
WHIRLPOOL, ARM, LEG AND LO-BOY	30
THERAPEUTIC POOL	30; Apron 40
TOILETS	30b
TRAINEE/STUDENT STUDY CUBICLE	30
TRANSFORMER ROOM	50
TRASH/COLLECTION ROOM	20
TUB ROOM	30
ULTRASOUND DIAGNOSIS	30
UNIFORMS	20
URINE TESTING ALCOVE	50
UTILITY AREAS	20
VAULT	30
VECTORCARDIOGRAPHY	50
VENDING/MACHINE AREA/ALCOVE	20
VENTILATORY TEST	30 (Note: a); Desk Area 75 (Note: a)
VESTIBULE	10
VESTIBULE AND WAITING AREA	10
VOLUNTEER/ESCORT SPACE	30
VOLUNTEER SIGN-IN	30
WAITING ROOMS	30
WALK- IN REFRIGERATOR (COLD ROOM)	20
WARD CLERK	30
WARD SUPPLY	30
WHEELCHAIR AND SPECIAL BED STORAGE	20
WHEELCHAIR AND STRETCHER	20
WORD PROCESSING/COMPUTER ROOM	30 (Note: e)
WORKROOM AND DRESSING ROOM	30
WORK STATION (COMPUTER)	30

Notes:

(a) Provide fluorescent lamps having CRI ratings of 85 or above.

(b) Footcandle value is for general illumination. If deemed necessary, provide supplemental lighting for mirrors and close inspections.

(c) Vary illumination levels by dimmer control devices.

(d) Light dimming shall be in accordance with specific project requirements.

(e) Provide indirect illumination.

(f) Control bed lighting individually.

(g) Footcandle value is for general illumination. Provide additional localized lighting as required.

(h) Fluorescent lamps shall be of the color-improved type, and shall essentially match the color temperature of the surgical light(s).

(i) (Not used)

(j) Supplemental lighting may be required at task locations.

(k) See exceptions under specific clinics.

(*) Average maintained footcandle at 2’-6” above finished surface.

APPENDIX B: DRAWINGS

The drawings show two possible topologies for normal and essential electrical system equipment, and a possible topology based on the telecommunications conduit connectivity requirements.

This page intentionally left blank.

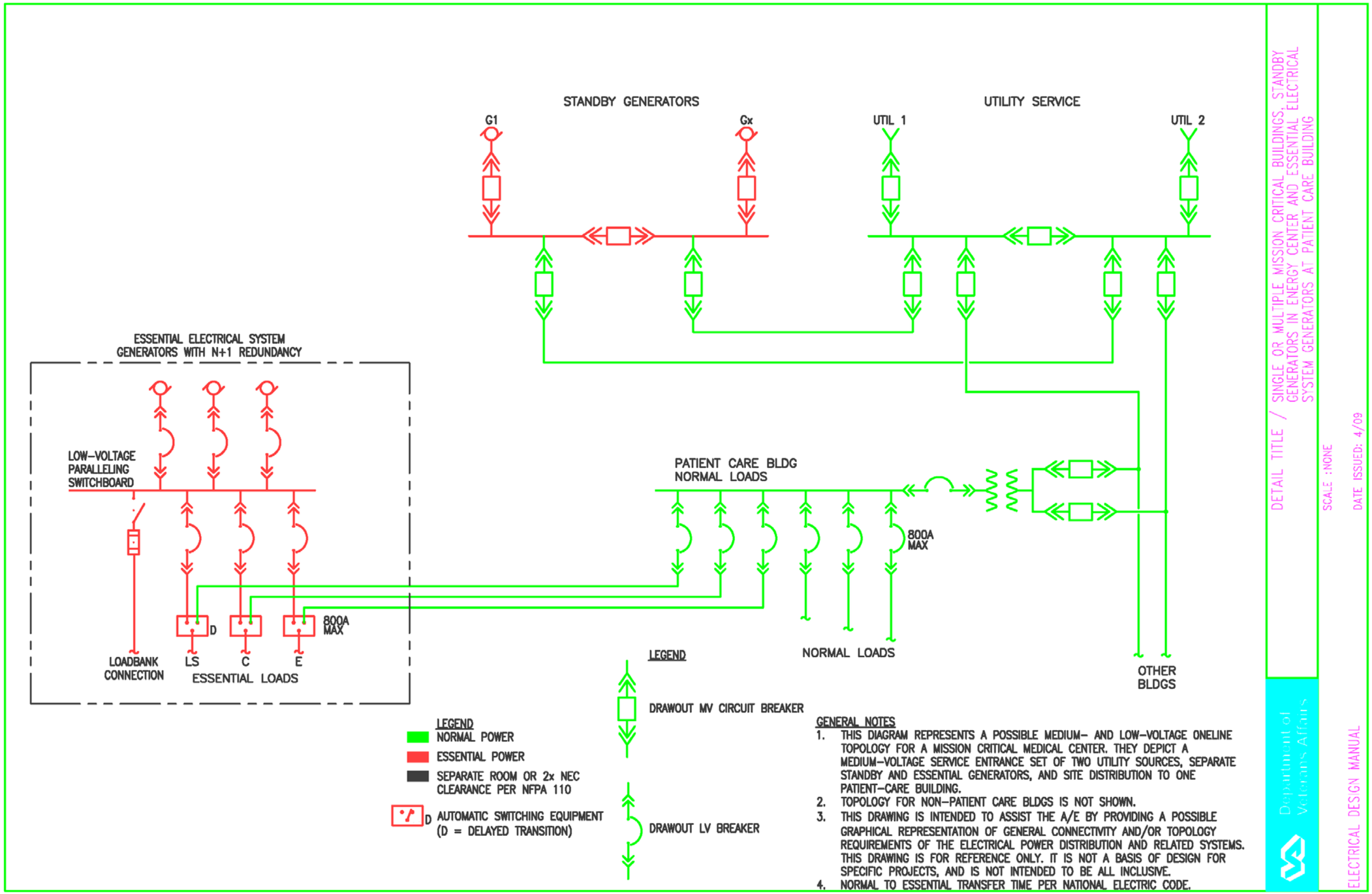
STANDBY GENERATORS
G1
Gx
UTILITY SERVICE
UTIL 1
UTIL 2
ESSENTIAL ELECTRICAL SYSTEM
GENERATORS WITH N+1 REDUNDANCY
LOW-VOLTAGE
PARALLELING
SWITCHBOARD
PATIENT CARE BLDG
NORMAL LOADS
800A
MAX
D
800A
MAX
LOADBANK
CONNECTION
LS
C
E
ESSENTIAL LOADS
NORMAL LOADS
OTHER
BLDGS
LEGEND
DRAWOUT MV CIRCUIT BREAKER
DRAWOUT LV BREAKER
LEGEND
NORMAL POWER
ESSENTIAL POWER
SEPARATE ROOM OR 2x NEC
CLEARANCE PER NFPA 110
D AUTOMATIC SWITCHING EQUIPMENT
(D = DELAYED TRANSITION)
GENERAL NOTES
1. THIS DIAGRAM REPRESENTS A POSSIBLE MEDIUM- AND LOW-VOLTAGE ONELINE TOPOLOGY FOR A MISSION CRITICAL MEDICAL CENTER. THEY DEPICT A MEDIUM-VOLTAGE SERVICE ENTRANCE SET OF TWO UTILITY SOURCES, SEPARATE STANDBY AND ESSENTIAL GENERATORS, AND SITE DISTRIBUTION TO ONE PATIENT-CARE BUILDING.
2. TOPOLOGY FOR NON-PATIENT CARE BLDGS IS NOT SHOWN.
3. THIS DRAWING IS INTENDED TO ASSIST THE A/E BY PROVIDING A POSSIBLE GRAPHICAL REPRESENTATION OF GENERAL CONNECTIVITY AND/OR TOPOLOGY REQUIREMENTS OF THE ELECTRICAL POWER DISTRIBUTION AND RELATED SYSTEMS. THIS DRAWING IS FOR REFERENCE ONLY. IT IS NOT A BASIS OF DESIGN FOR SPECIFIC PROJECTS, AND IS NOT INTENDED TO BE ALL INCLUSIVE.
4. NORMAL TO ESSENTIAL TRANSFER TIME PER NATIONAL ELECTRIC CODE.
DETAIL TITLE / SINGLE OR MULTIPLE MISSION CRITICAL BUILDINGS, STANDBY GENERATORS IN ENERGY CENTER AND ESSENTIAL ELECTRICAL SYSTEM GENERATORS AT PATIENT CARE BUILDING
SCALE :NONE
DATE ISSUED: 4/09
Department of Veterans Affairs
ELECTRICAL DESIGN MANUAL

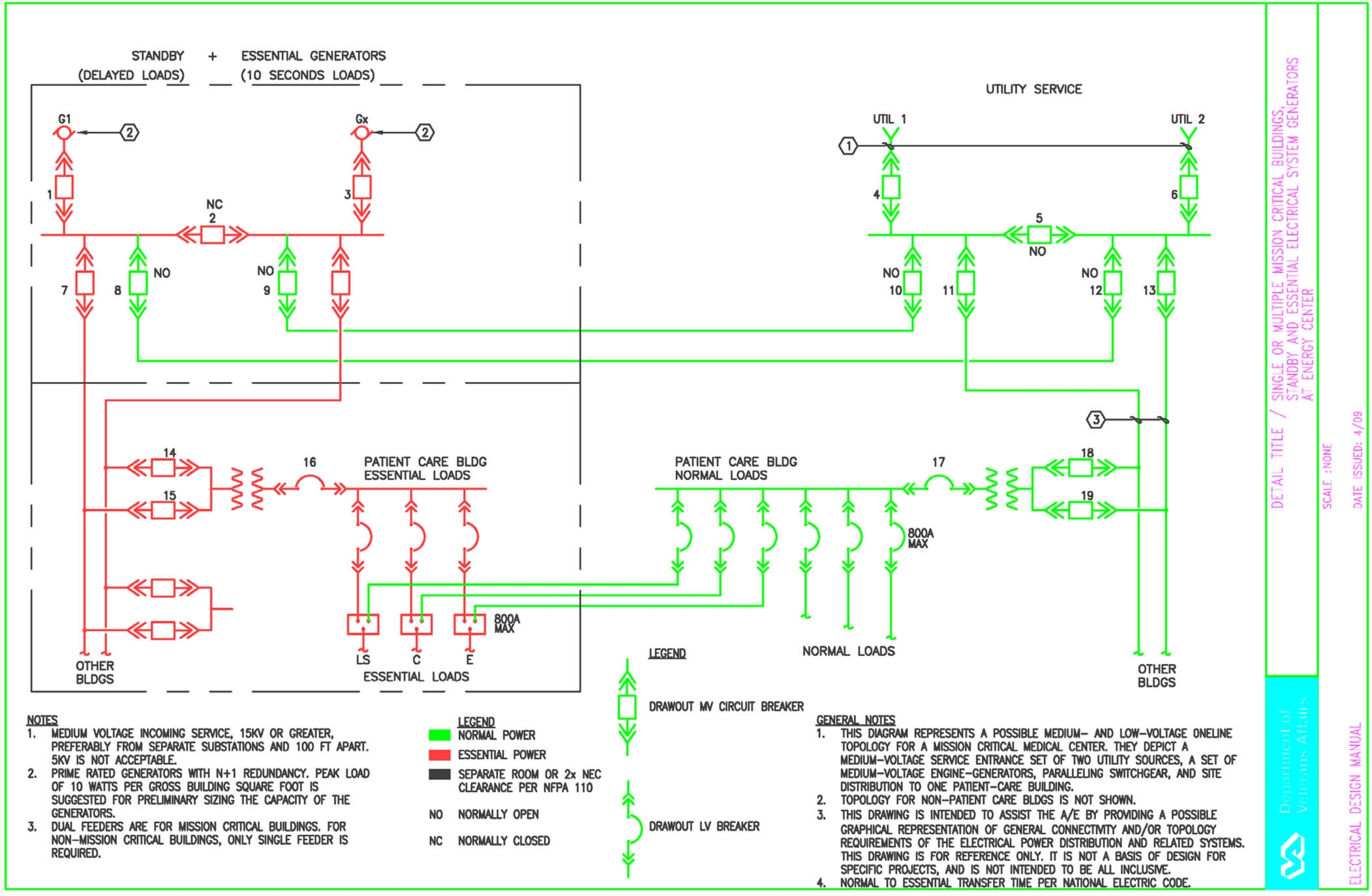
STANDBY + ESSENTIAL GENERATORS
(DELAYED LOADS) (10 SECONDS LOADS)
UTILITY SERVICE
G1
Gx
UTIL 1
UTIL 2
NC
NO
PATIENT CARE BLDG
ESSENTIAL LOADS
PATIENT CARE BLDG
NORMAL LOADS
800A MAX
LS
C
E
OTHER BLDGS
NORMAL LOADS
OTHER BLDGS
ESSENTIAL LOADS
LEGEND
DRAWOUT MV CIRCUIT BREAKER
DRAWOUT LV BREAKER
NOTES
1. MEDIUM VOLTAGE INCOMING SERVICE, 15KV OR GREATER, PREFERABLY FROM SEPARATE SUBSTATIONS AND 100 FT APART. 5KV IS NOT ACCEPTABLE.
2. PRIME RATED GENERATORS WITH N+1 REDUNDANCY. PEAK LOAD OF 10 WATTS PER GROSS BUILDING SQUARE FOOT IS SUGGESTED FOR PRELIMINARY SIZING THE CAPACITY OF THE GENERATORS.
3. DUAL FEEDERS ARE FOR MISSION CRITICAL BUILDINGS. FOR NON-MISSION CRITICAL BUILDINGS, ONLY SINGLE FEEDER IS REQUIRED.
LEGEND
NORMAL POWER
ESSENTIAL POWER
SEPARATE ROOM OR 2x NEC CLEARANCE PER NFPA 110
NO NORMALLY OPEN
NC NORMALLY CLOSED
GENERAL NOTES
1. THIS DIAGRAM REPRESENTS A POSSIBLE MEDIUM- AND LOW-VOLTAGE ONELINE TOPOLOGY FOR A MISSION CRITICAL MEDICAL CENTER. THEY DEPICT A MEDIUM-VOLTAGE SERVICE ENTRANCE SET OF TWO UTILITY SOURCES, A SET OF MEDIUM-VOLTAGE ENGINE-GENERATORS, PARALLELING SWITCHGEAR, AND SITE DISTRIBUTION TO ONE PATIENT-CARE BUILDING.
2. TOPOLOGY FOR NON-PATIENT CARE BLDGS IS NOT SHOWN.
3. THIS DRAWING IS INTENDED TO ASSIST THE A/E BY PROVIDING A POSSIBLE GRAPHICAL REPRESENTATION OF GENERAL CONNECTIVITY AND/OR TOPOLOGY REQUIREMENTS OF THE ELECTRICAL POWER DISTRIBUTION AND RELATED SYSTEMS. THIS DRAWING IS FOR REFERENCE ONLY. IT IS NOT A BASIS OF DESIGN FOR SPECIFIC PROJECTS, AND IS NOT INTENDED TO BE ALL INCLUSIVE.
4. NORMAL TO ESSENTIAL TRANSFER TIME PER NATIONAL ELECTRIC CODE.
DETAIL TITLE / SINGLE OR MULTIPLE MISSION CRITICAL BUILDINGS, STANDBY AND ESSENTIAL ELECTRICAL SYSTEM GENERATORS AT ENERGY CENTER
SCALE : NONE
DATE ISSUED: 4/09
Department of Veterans Affairs
ELECTRICAL DESIGN MANUAL

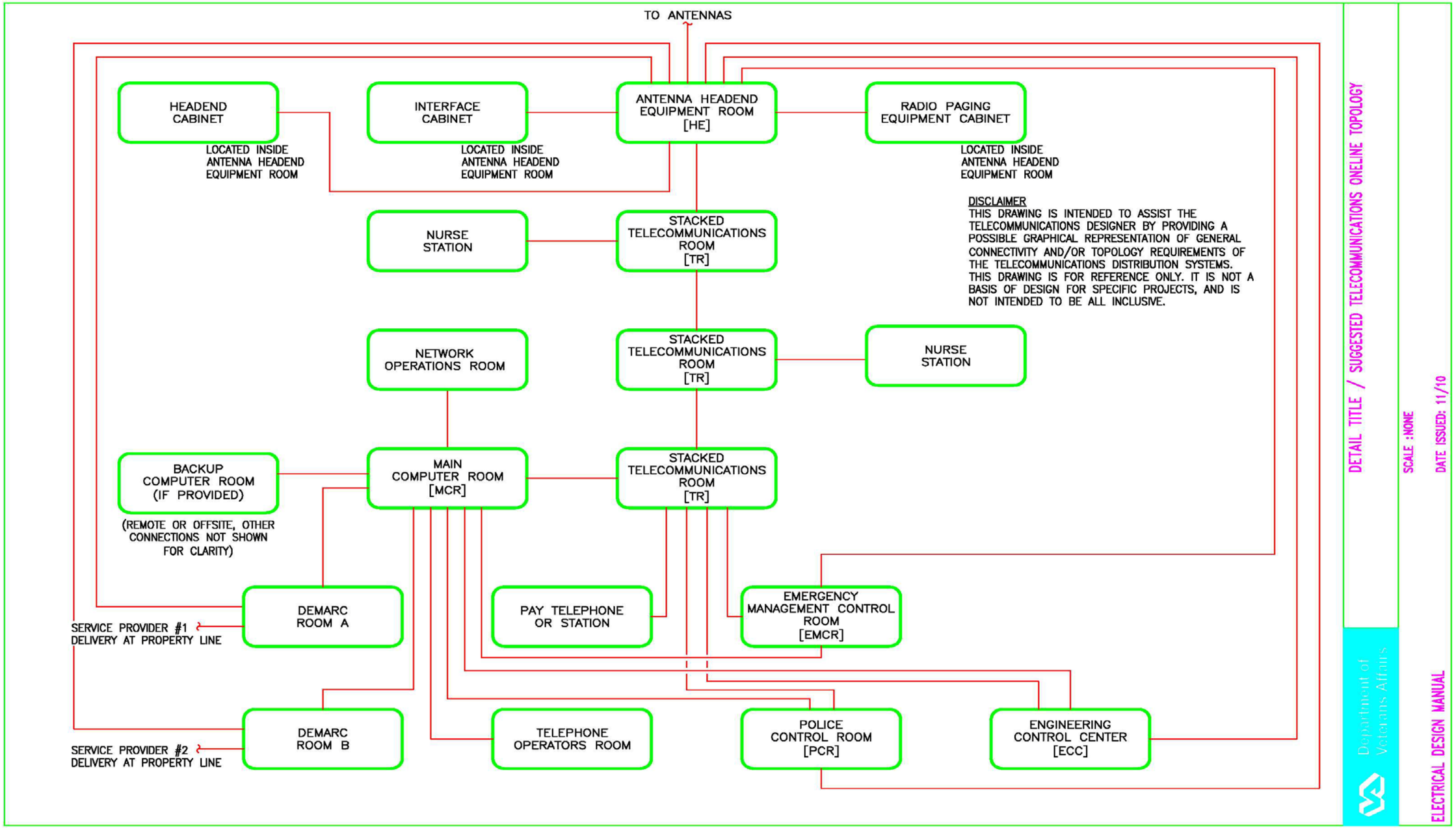
TO ANTENNAS
HEADEND CABINET
LOCATED INSIDE ANTENNA HEADEND EQUIPMENT ROOM
INTERFACE CABINET
LOCATED INSIDE ANTENNA HEADEND EQUIPMENT ROOM
ANTENNA HEADEND EQUIPMENT ROOM [HE]
RADIO PAGING EQUIPMENT CABINET
LOCATED INSIDE ANTENNA HEADEND EQUIPMENT ROOM
DISCLAIMER
THIS DRAWING IS INTENDED TO ASSIST THE TELECOMMUNICATIONS DESIGNER BY PROVIDING A POSSIBLE GRAPHICAL REPRESENTATION OF GENERAL CONNECTIVITY AND/OR TOPOLOGY REQUIREMENTS OF THE TELECOMMUNICATIONS DISTRIBUTION SYSTEMS. THIS DRAWING IS FOR REFERENCE ONLY. IT IS NOT A BASIS OF DESIGN FOR SPECIFIC PROJECTS, AND IS NOT INTENDED TO BE ALL INCLUSIVE.
NURSE STATION
STACKED TELECOMMUNICATIONS ROOM [TR]
NETWORK OPERATIONS ROOM
STACKED TELECOMMUNICATIONS ROOM [TR]
NURSE STATION
BACKUP COMPUTER ROOM (IF PROVIDED)
(REMOTE OR OFFSITE, OTHER CONNECTIONS NOT SHOWN FOR CLARITY)
MAIN COMPUTER ROOM [MCR]
STACKED TELECOMMUNICATIONS ROOM [TR]
DEMARC ROOM A
SERVICE PROVIDER #1 DELIVERY AT PROPERTY LINE
PAY TELEPHONE OR STATION
EMERGENCY MANAGEMENT CONTROL ROOM [EMCR]
DEMARC ROOM B
SERVICE PROVIDER #2 DELIVERY AT PROPERTY LINE
TELEPHONE OPERATORS ROOM
POLICE CONTROL ROOM [PCR]
ENGINEERING CONTROL CENTER [ECC]
DETAIL TITLE / SUGGESTED TELECOMMUNICATIONS ONELINE TOPOLOGY
SCALE :NONE
DATE ISSUED: 11/10
Department of Veterans Affairs
ELECTRICAL DESIGN MANUAL

INDEX

A

AIR ALARM SYSTEM 9-4
ALARM SYSTEM (GAS, VACUUM, AIR) 9-4
Antenna Headend Equipment Room
  Telephone/Data/Telecommunications 8-3
ANTENNA HEADEND EQUIPMENT ROOM 8-8
  Cabinets/Racks, Number 8-6
  Configuration 8-6
  Fire Protection 8-7
  Grounding 8-7
  Heating, Ventilation, and Air Conditioning 8-7
  Lighting 8-7
  Location 8-5
  Power 8-7
  Room Envelope 8-6
  Room Size 8-6
  Security 8-7
  Tip Wire/Cable Interface Area 8-6
  Wire Management 8-8
ARCHITECT/ENGINEER REVIEW CHECKLIST 1-7
ASHRAE STANDARD 90.1 – 2004 RULE 1-10

B

BED ROOM LIGHTING
  Bed Lights 6-7
  Bed Room Lavatory 6-8
  Closets, Lockers 6-8
  General 6-7
  Night Light 6-8
  Service Alcove 6-8
  Toilet/Bathroom 6-8
  Vestibule Lighting 6-8

C

CABLE AND WIRE PATHWAYS
  Telephone/Data/Telecommunications 8-5
CABLE TRAYS
  Telecommunications Systems 7-7
CALCULATIONS 1-16
  Arc Flash 1-17
  Fault Current 1-17
  Fire Alarm Systems 1-19
  Generator Sizing 1-18
  Harmonic Distortion 1-18
  Lighting 1-18, 6-3
  Lightning Protection 1-18
  Load 1-17
  Protective Device Coordination 1-17
  Renovation 1-19
  Seismic Bracing 1-18
  Transport Systems 1-19
  Voltage Drop 1-18
CCTV ..... *See* Closed Circuit Television
CELLULAR FLOORS
  Telecommunications Systems 7-7
CLOSED CIRCUIT TELEVISION
  Telecommunications Systems Requirements
    7-11
CODES AND STANDARDS 1-12, 1-14
  Local Codes and Conditions 1-14
  Local Utility 1-14
COMPUTER AIDED FACILITIES MANAGEMENT
  REQUIREMENTS 1-9
CONDUITS AND BOXES
  Telecommunications Systems 7-7
CONDUITS, MINIMUM SIZE
  Telecommunications Systems 7-4
COORDINATION
  Considerations 1-3
  Pre-Design Site Survey 1-4
  Utility Company 1-3
COST ESTIMATING MANUAL 1-8
CRITERIA, OTHER DESIGN
  Commissioning 1-12
  Measurements and Verification 1-12
CRITERIA, OTHER DESIGN
  Additional Measures 1-10
  ASHRAE Standard 90.1 – 2004 Rule 1-10
  DOE Interim Final Rule 1-10
  Energy Conservation 1-10
CRITERIA, VA-SPECIFIC
  Abbreviations and Symbols 1-16
  Drawings 1-15, 1-16
  Proprietary Items 1-16
  Sequence of Electrical Drawings 1-16

D

DEMARC ROOM
  Requirements 8-8
  Telephone/Data/Telecommunications 8-3
DESIGN ALERTS 1-7
DESIGN AND CONSTRUCTION PROCEDURES .. 1-5
DESIGN GUIDES 1-6
DESIGN MANUALS 1-5
DESIGN REQUIREMENTS 1-14
DESIGN SUBMISSION REQUIREMENTS 1-6
DISTRIBUTION SYTEMS
  Electrical Utility Service 5-3

DISTRIBUTION, PRIMARY
Disconnecting Air Switches 5-4
General..... 5-3
Primary Cabling 5-4
Primary Switchgear 5-4
DISTRIBUTION, SECONDARY
General..... 5-4
Low Voltage Transformers 5-4
Med-To-Low Voltage Transformers 5-4
Panelboards 5-5
Surge Suppression..... 5-5
Switchboards, Switchgear, Motor Control Centers..... 5-4
Uninterruptible Power 5-5
DOE INTERIM FINAL RULE 1-10
DRAWINGS
Telecommunications Systems..... 7-8
DURESS ALARM AND EMERGENCY NOTIFICATION SYSTEM
Telecommunications Systems Requirements 7-12

E

EADR.....*See* Electronic Access and Door Control
ECC..... *See* ENGINEERING CONTROL CENTER
ELECTRICAL ROOMS/CLOSETS
Elevators..... 5-7
Future Expansion..... 5-7
General..... 5-7
Operating Rooms 5-7
ELECTRONIC ACCESS AND DOOR CONTROL
Telecommunications Systems Requirements 7-11
EMCR .....*See* EMERGENCY MANAGEMENT CONTROL ROOM
ENS .....*See* Duress Alarm and Emergency Notfication System
EQUIPMENT REFERENCE MANUAL..... 1-5
EQUIPMENT SYSTEMS, HOSPITALS
Delayed Automatic Connection 4-8
Non-Delayed Automatic Connection 4-6
ESSENTIAL AND STANDBY ELECTRICAL SYSTEMS
Automatic Transfer Switches 4-3
Commissioning..... 4-3
Control Network..... 4-3
Diesel Fuel Storage..... 4-4
Existing Facilities 4-4
Generators 4-3
Location..... 4-4
Mixing..... 4-3
ESSENTIAL ELECTRICAL SYSTEMS, HOSPITALS 4-4
Alternate Source of Power..... 4-8
Critical Branch 4-5
Life Safety Branch..... 4-4
ESSENTIAL ELECTRICAL SYSTEMS, NURSING HOMES
Alternate Source of Power 4-9
Critical Branch 4-8
Life Safety Branch..... 4-8
ESSENTIAL ELECTRICAL SYSTEMS, OTHER FACILITIES
Alternate Source of Power 4-9
Boiler Plant 4-9
Energy Center..... 4-9
Fire Station 4-9
Type 3 4-9
EXECUTIVE ORDER 13423
Additional Measures (MOU) 1-12
Major Renovations..... 1-11
New Construction..... 1-11

F

FIRE PROTECTION
Antenna Headend Equipment Room 8-7
FIRE PROTECTION DESIGN MANUAL 1-9

G

GROUNDING
Antenna Headend Equipment Room 8-7
Conductor..... 2-5
Electrodes..... 2-5
Main Computer Room..... 8-9
Metal Curtain Wall 2-5
Raceways, Wiring, And Equipment 2-5
Telecommunications Room..... 8-10
Telephone/Data/Telecommunications 8-5

H

HEADEND EQUIPMENT ROOM ..... *See* Antenna Headend Equipment Room
HEATING, VENTILATION, AND AIR CONDITIONING
Antenna Headend Equipment Room 8-7
HORIZONTAL CONDUITS
Telecommunications Systems..... 7-6

I

IC *See* Intercommunication
IDF.....*See* TELECOMMUNICATIONS ROOM
INSTALLATION
Prefabricated Bedside Patient Unit..... 9-3
INTERCOMMUNICATION
Telecommunications Systems Requirements 7-10
INTERCONNECTING CONDUIT REQUIREMENTS
Telecommunications Systems..... 7-6

L

LIFE-CYCLE COST ANALYSIS
Methodology 1-11
Requirements 1-10
LIGHTING
Antenna Headend Equipment Room 8-7
Ballasts 6-4
Calculations 6-3
Control 6-5
Corridors, Nursing, Geriatric 6-8
Design Approach 6-3
Elevator Hoistways 6-10
Eye Examination Rooms 6-8
Fixture Schedule 6-3
Fixtures 6-4
Kitchen Hood 6-10
Light Sources, Fluorescent 6-4
Light Sources, LED 6-4
Light Sources, Metal Halide 6-4
Main Computer Room 8-9
Parking Garages 6-10
Pool 6-10
Telecommunications Room 8-10
Telephone Operators Room 8-8
LIGHTING, BED ROOM ..... *See* Bed Room Lighting
LIGHTING, EXTERIOR
Existing Sites 6-11
General 6-10
Obstruction Lighting 6-11
Parking Lots 6-11
LIGHTNING
Telephone/Data/Telecommunications 8-4
LIGHTNING PROTECTION SYSTEMS 2-5
LOCATION
Antenna Headend Equipment Room 8-5

M

MAIN COMPUTER ROOM
Grounding 8-9, 8-10
Lighting 8-9, 8-10
Power 8-9, 8-10
Security 8-9, 8-10
Telephone/Data/Telecommunications 8-3
Wire Management 8-10
MASTER ANTENNA TELEVISION
Telecommunications Systems Requirements 7-10
MASTER SPECIFICATIONS 1-4
MATV ..... *See* Master Antenna Television
MCR ..... *See* MAIN COMPUTER ROOM
MEDICAL GAS ALARM SYSTEM 9-4
MID ..... *See* Motion Intrusion Detection
MOTION INTRUSION DETECTION
Telecommunications Systems Requirements 7-11
MOTOR DISCONNECT SWITCHES 2-6

N

NATIONAL CAD STANDARD 1-5
NURSE CALL
Telecommunications Systems Requirements 7-9

P

PA*See* Public Address
PAL ..... *See* Patient/Staff Annunciator/Locator System
PAS ..... *See* Patient Annunciator/Locator System
PATIENT ANUNCIATOR/LOCATOR SYSTEM
Telecommunications Systems Requirements 7-12
PATIENT WALL SYSTEMS
Prefabricated Bedside Patient Unit 9-3
PATIENT/STAFF ANUNCIATOR/LOCATOR SYSTEM
Telecommunications Systems Requirements 7-11
PBPU ..... *See* Prefabricated Bedside Patient Unit
PCR ..... *See* POLICE CONTROL ROOM
PHYSICAL SECURITY DESIGN MANUAL 1-8
POWER
Antenna Headend Equipment Room 8-7
Main Computer Room 8-9
Telecommunications Room 8-10
Telephone Operators Room 8-8
Telephone/Data/Telecommunications 8-4
POWER MONITORING AND METERING
Energy Centers 5-5, 5-6
Existing Facilities 5-6
PREFABRICATED BEDSIDE PATIENT UNIT
Application 9-4
Definition 9-3
General 9-3
Installation 9-3
Patient Wall Systems 9-3
PUBLIC ADDRESS
Telecommunications Systems Requirements 7-10

Q

QUALITY ALERTS 1-7

R

RACEWAYS
Concealed and Exposed 2-3

Ethylene Oxide Sterization Area 2-4
Poke-Thrus/Power Poles 2-4
Radiology Rooms 2-4
Spare Conduits 2-3
Underfloor Duct Systems 2-4
Underground Ducts and Conduits 2-3
Wiring 2-3
RADIO PAGING SYSTEM
Telecommunications Systems Requirements 7-11
RECEPTACLES
Administrative 3-5
Animal Surgery Rooms 3-4
Corridors 3-5
Definition 3-3
Electrical Closet 3-6
Exterior 3-4
Ground Fault Interrupter 3-3
Human Surgery Rooms 3-3
ICU-CCU 3-3
Interstitial Spaces 3-6
Kitchens 3-5
Laboratories 3-5
Maximum Receptacles Per Circuit 3-3
Motorized Treadmills 3-6
Psychiatric Patient Rooms 3-6
Rehabilitation 3-5
Research Facilities 3-5
Self-Illuminated Emergency Receptacle 3-4
Special Procedures Room 3-4
Stairwells 3-6
Telecommunications Room 3-6
TV Power 3-6
Waiting Areas 3-4
RENOVATION
Age and Physical Condition 1-19
Compatibility 1-22
Conductors 1-20
Conduit and Boxes 1-20
Continuity of Service 1-21
Drawings 1-19
Government Retained Equipment 1-21
Lighting Fixtures 1-21
Modification vs Replacement 1-19
Panelboards 1-21
Parts Availability 1-20
Wiring Devices 1-20
ROOM ENVELOPE
Antenna Headend Equipment Room 8-6
RPS ..... *See* Radio Paging System

S

SECURITY
Antenna Headend Equipment Room 8-7
Main Computer Room 8-9
SMS 8-5
Telecommunications Room 8-10
Telephone/Data/Telecommunications 8-5
SECURITY MANAGEMENT AND CONTROL, AND CENTRALIZED POLICE SECURITY MANAGEMENT SYSTEMS
Telecommunications Systems Requirements 7-12
SEISMIC BRACING
Drawings 1-18
Equipment Bracing 1-19
SEISMIC DESIGN REQUIREMENTS 1-9
Signal Closet *See* TELECOMMUNICATIONS ROOM
SMS 8-5, *See* Security Management and Control, and Centralized Police Management System
STANDARD DETAIL 1-5
STANDBY ELECTRICAL SYSTEMS
Requirements 4-10
Standby Source of Power 4-10
SUSTAINABLE DESIGN AND ENERGY REDUCTION MANUAL 1-8

T

TBB
Grounding 8-4
TELECOMMUNICATION INFRASTRUCTURE PLANT
Telecommunications Systems 7-3
Telecommunications Systems Requirements 7-4
Telecommunications Bonding Backbone. *See* TBB
Telecommunications Closet ..... *See* TELECOMMUNICATIONS ROOM
Telecommunications Main Ground Bar ..... *See* TMGB
TELECOMMUNICATIONS OUTLETS
Telecommunications Systems 7-8
TELECOMMUNICATIONS ROOM
Telephone/Data/Telecommunications 8-3
Wire Management 8-10
TELECOMMUNICATIONS SYSTEMS
Cable Trays 7-7
Cellular Floors 7-7
Conduits and Boxes 7-7
Conduits, Minimum Size 7-4
Drawings 7-8
Horizontal Conduits 7-6
Interconnecting Conduit Requirements 7-6
Scope 7-3
Telecommunications Infrastructure Plant .. 7-3
Telecommunications Outlets 7-8

Vertical Risers 7-7
Wires and Cables 7-9
Wireways, Open 7-7
TELECOMMUNICATIONS SYSTEMS
REQUIREMENTS
Closed Circuit Television 7-11
Duress Alarm and Emergency Notification System 7-12
Electronic Access and Door Control 7-11
Intercommunication 7-10
Master Antenna Television 7-10
Motion Intrusion Detection 7-11
Nurse Call 7-9
Patient Anunciator/Locator System 7-12
Patient/Staff Anunciator/Locator System 7-11
Public Address 7-10
Radio Paging System 7-11
Security Management and Control, and Centralized Police Security Management Systems 7-12
Telecommunications Infrastructure Plant . 7-4
Two-WAY Radio System 7-12
TELEPHONE OPERATORS ROOM
Lighting 8-8
Power 8-8
Telephone/Data/Telecommunications 8-3
TELEPHONE/DATA/TELECOMMUNICATIONS
Antenna Headend Equipment Room 8-3
Basement 8-5
Cable and Wire Pathways 8-5
Cable Trays 8-10
Demarc Room 8-3
Electrical Requirements, General 8-5
Grounding 8-5
Lighting 8-4
Main Computer Room 8-3
Other Control Rooms 8-4
Power 8-4
Scope 8-3
Security 8-5
Telecommunications Room 8-3
Telephone Operators Room 8-3
TIP *See* Telecommunications Infrastructure Plant
TIP WIRE/CABLE INTERFACE AREA
Antenna Headend Equipment Room 8-6
TMGB
Grounding 8-4
TOR ..... *See* TELECOMMUNICATIONS ROOM
TR *See* TELECOMMUNICATIONS ROOM
TRS ..... *See* Two-Way Radio System
TWO-WAY RADIO SYSTEM
Telecommunications Systems Requirements 7-12

U

UTILITY SERVICE 5-3

V

VA HOSPITAL BUILDING SYSTEM 1-9
VACUUM ALARM SYSTEM 9-4
VERTICAL RISERS
Telecommunications Systems 7-7
VHA APPLICATION GUIDE 1-5

W

WIRE MANAGEMENT
Antenna Headend Equipment Room 8-8
Main Computer Room 8-10
Telecommunications Room 8-10
WIRES AND CABLES
Telecommunications Systems 7-9
WIREWAYS, OPEN
Telecommunications Systems 7-7

This page intentionally left blank.